Specification Drainage

SD1018 Customer Guide

ZURN.COM US 1.855.ONE.ZURN CANADA 1.877.892.5216

Effective October 1, 2018
Replaces All Previous Price Lists

SD1018

INTRODUCTION

TABLE OF CONTENTS - BY SECTION	2
Z250H FOG-CEPTOR® INTERCEPTOR	7
STABILIZER SOLUTIONS	9
THE RACE FOR TIME - Z1231-EZ	10
ZS880 STAINLESS STEEL LINEAR SHOWER DRAIN	11
ZURN TOP-SET® DECK PLATE	12
Z130 SIPHONIC ROOF DRAIN WITH DECK PLATE	13
GREEN ROOFING DRAINAGE SOLUTIONS	15
Z1072 – ZSHIELD™ FLOOR DRAIN BARRIER TRAP SEAL	16
A PERFECT FIT: Z1322XL-EZ AND Z1332XL-EZ ECOLOTROL™ WALL HYDRANTS	17
EZ HYDRANTS: Z1327-EZ, Z1350-EZ, Z1320XL-EZ	18
ZURN BARIATRIC PROVIDES SUPERIOR PERFORMANCE	19
Z1222-CB CARRIER BANK	21
CUSTOMER GUIDE INSTRUCTIONS	22
TYPICAL PRODUCT PAGE NAVIGATION	22
ABBREVIATIONS USED IN THIS CUSTOMER GUIDE	23

TABLE OF CONTENTS - BY SECTION

PRODUCT HIGHLIGHT

Z250H FOG-CEPTOR® INTERCEPTOR 7
STABILIZER SOLUTIONS 9
THE RACE FOR TIME - Z1231-EZ 10
ZS880 STAINLESS STEEL LINEAR SHOWER DRAIN 11
ZURN TOP-SET® DECK PLATE 12
Z130 SIPHONIC ROOF DRAIN WITH DECK PLATE 13
GREEN ROOFING DRAINAGE SOLUTIONS 15
Z1072 – ZSHIELD™ FLOOR DRAIN BARRIER TRAP SEAL 16
A PERFECT FIT: Z1322XL-EZ AND Z1332XL-EZ ECOLOTROL™ WALL HYDRANTS 17
EZ HYDRANTS: Z1327-EZ, Z1350-EZ, Z1320XL-EZ 18
ZURN BARIATRIC PROVIDES SUPERIOR PERFORMANCE 19
Z1222-CB CARRIER BANK 21
CUSTOMER GUIDE INSTRUCTIONS 22
TYPICAL PRODUCT PAGE NAVIGATION 22
ABBREVIATIONS USED IN THIS CUSTOMER GUIDE 23

ROOF DRAINS

ROOF DRAIN - PRODUCT COMPLIANCE 26
ROOF DRAIN - GENERAL INFORMATION 26
ROOF DRAIN - APPLICATION INDEX 26
Z100 15" DIAMETER MAIN ROOF DRAIN WITH LOW SILHOUETTE DOME 27
Z101 HIGH CAPACITY 20" DIAMETER MAIN ROOF DRAIN WITH LOW SILHOUETTE DOME 28
Z103 15" DIAMETER DEEP SUMP DUAL OUTLET ROOF DRAIN WITH LOW SILHOUETTE DOME 28
Z103-45 45° 15" DIAMETER DEEP SUMP DUAL OUTLET ROOF DRAIN WITH LOW SILHOUETTE DOME 29
Z104 15" DIAMETER DEEP SUMP ROOF DRAIN WITH LOW SILHOUETTE DOME 30
Z105 CONTROL-FLO™ ROOF DRAIN WITH PARABOLIC WEIR 31
Z107 20" WIDE DECK FLANGE ROOF DRAIN 32
Z108 15" DIAMETER DECK RECEPTOR DRAIN 33
Z110 15" GREEN ROOF DRAIN WITH PERFORATED SCREEN ASSEMBLY, AND REMOVABLE COVER WITH LIFT HANDLE 34
Z110-AI GREEN ROOF DRAIN WITH PERFORATED SCREEN ASSEMBLY, REMOVABLE COVER WITH LIFT HANDLE, AND AUXILIARY INLET 35
Z111 12" DIAMETER FLAT DECK ROOF DRAIN FOR METAL DECKS 36
Z121 12" DIAMETER ROOF DRAIN LOW SILHOUETTE DOME 37
Z122 12" DIAMETER DECK RECEPTOR DRAIN 38
Z125 8-3/8" DIAMETER ROOF DRAIN LOW SILHOUETTE DOME 39
Z127 8-1/2" DIAMETER DECK RECEPTOR DRAIN 40
Z130 14-9/32" DIAMETER SIPHONIC MAIN ROOF DRAIN 41
Z131 14-9/32" DIAMETER SIPHONIC OVERFLOW ROOF DRAIN 41
Z150 14" SQUARE TOP PROM-DECK DRAIN WITH HEEL-PROOF GRATE AND ROTATABLE FRAME 42
Z154 12" SQUARE TOP PROM-DECK DRAIN WITH HEEL-PROOF GRATE AND ROTATABLE FRAME 43
Z158 10" SQUARE TOP PROM-DECK DRAIN WITH HEEL-PROOF GRATE AND ROTATABLE FRAME 44
Z160 135° SCUPPER DRAIN 45
Z161 3" X 10" OBLIQUE SCUPPER DRAIN 45
Z163 15" DIAMETER COMBINATION MAIN ROOF AND OVERFLOW DRAIN WITH LOW SILHOUETTE DOMES AND DOUBLE TOP-SET® DECK PLATE 46
Z164 12" DIAMETER COMBINATION MAIN ROOF AND OVERFLOW DRAIN WITH LOW SILHOUETTE DOMES AND DOUBLE TOP-SET® DECK PLATE 47
Z165 8-3/8" DIAMETER COMBINATION MAIN ROOF AND OVERFLOW DRAIN WITH LOW SILHOUETTE DOMES AND DOUBLE TOP-SET® DECK PLATE 48
Z180 4-1/2" DIAMETER CORNICE DRAIN WITH BOTTOM OUTLET 48
Z181 6" DIAMETER CORNICE DRAIN WITH BOTTOM OUTLET 49
Z182 4-1/2" DIAMETER CORNICE DRAIN WITH 90° OUTLET 49
Z185 6" DIAMETER CORNICE DRAIN WITH 90° OUTLET 50
Z187 6" X 7" OR 8" X 12" OBLIQUE SCUPPER DRAIN 50
Z189 5" X 6" X 11" SCUPPER DRAIN 51
Z190 VERTICAL EXPANSION JOINT 51
Z191 5" X 4" X 24" DOWNSPOUT BOOT 52
Z191-RD 4" X 18" DOWNSPOUT BOOT 52
Z192 4" X 3" DOWNSPOUT BOOT 53
Z193 VANDAL-PROOF HOODED VENT CAP 53
Z195 VENT STACK FLASHING SLEEVE 54
Z196 VENT STACK FLASHING SLEEVE 54
Z197 RISER SLEEVE 55
Z198 PARAPET SCUPPER SLEEVE 55
Z199 DOWNSPOUT NOZZLE 56
Z199-DC DOWNSPOUT COVER 57

FLOOR DRAINS

FLOOR DRAINS - GENERAL INFORMATION 61
FLOOR DRAINS - APPLICATION INDEX 61
CAST IRON EZ1™ NOMENCLATURE DECODER 62
Z300 THOROFLUSH DRAIN 63
Z310 THOROFLUSH DRAIN 63
Z315 VANDAL-PROOF ACCESS DRAIN 64
Z319 THOROFLUSH DRAIN – LARGE CAPACITY 64
Z320 REFRIGERATOR DRAIN 65
Z325 INDIRECT WASTE FUNNEL WITH INTEGRAL BACKWATER VALVE 65
Z326 INDIRECT WASTE FUNNEL 66
Z328 FUNNEL CONVERTING ASSEMBLY 66
Z329 FUNNEL CONVERTING ASSEMBLY 67
Z349 TERRACE PLANTING AREA DRAIN 68
Z350 PLANTING AREA DRAIN 68
Z355 PRISON CELL FLOOR DRAIN 69
Z400 "TYPE B" ROUND STRAINER WITH HEEL-PROOF SQUARE OPENINGS 69
ZS400 "TYPE BS" ROUND STRAINER WITH SLOTTED OPENINGS 70
Z400 "TYPE BL" ROUND STRAINER WITH DEX-O-TEX FLANGE 70
Z400 "TYPE BZ" ROUND LEVELING STRAINER WITH SQUARE OPENINGS 71
Z400 "TYPE C" ROUND HINGED STRAINER 71
Z400 "TYPE D" ROUND STRAINER WITH SOLID HINGED COVER 72
Z400 "TYPE E" ROUND STRAINER WITH INTEGRAL FUNNEL 72
Z400 "TYPE G" ROUND STRAINER WITH DOME 72
Z400 "TYPE H" ROUND STRAINER WITH CLAMP DEVICE 73
Z400 "TYPE I" ROUND STRAINER WITH RAISED LIP 73
Z400 "TYPE J" RECTANGULAR STRAINER WITH HEEL-PROOF SLOTTED OPENINGS 74
Z400 "TYPE K" ANGULAR STRAINER 74
Z400 "TYPE M" ROUND STRAINER WITH SLOTTED OPENINGS AND SUR-SET BUCKET 75
Z400 "TYPE N" ROUND STRAINER WITH DEEP FLANGED GRATE 75
Z400 "TYPE S" SQUARE STRAINER 76
ZS400 "TYPE SS" SQUARE STRAINER 76
Z400 "TYPE SC" SQUARE STRAINER WITH SOLID HINGED COVER 77
Z400 "TYPE SH" SQUARE HINGED STRAINER 77
Z400 "TYPE SL" SQUARE STRAINER WITH DEX-O-TEX FLANGE 77
Z400 "TYPE SZ" SQUARE LEVELING STRAINER WITH SLOTTED OPENINGS 78
Z400-SR FLOOR DRAIN STABILIZER RING 79
Z400-U ADJUSTABLE STRAINER EXTENSION 79
Z400-18 LEVELING RING 79
Z499B ROUND PROTECTIVE COVER FOR FLOOR DRAINS 80
Z499S SQUARE PROTECTIVE COVER FOR FLOOR DRAINS 80
Z415-BZ1 BODY ASSEMBLY W/ "TYPE B" STRAINER AND EZ1™ TECHNOLOGY 81
Z415-SZ1 BODY ASSEMBLY W/ "TYPE S" STRAINER AND EZ1™ TECHNOLOGY 82

TABLE OF CONTENTS - BY SECTION

Z415-BZ1-DP BODY ASSEMBLY W/ "TYPE B" STRAINER, DECK PLATE AND EZ1™ TECHNOLOGY 83
Z415-SZ1-DP BODY ASSEMBLY W/ "TYPE S" STRAINER, DECK PLATE AND EZ1™ TECHNOLOGY 84
Z415B-DP BODY ASSEMBLY W/ "TYPE B" STRAINER AND DECK PLATE 85
Z415S-DP BODY ASSEMBLY W/ "TYPE S" STRAINER AND DECK PLATE 86
Z415 BODY ASSEMBLY WITH HEEL-PROOF "TYPE B" STRAINER 87
ZS415 BODY ASSEMBLY WITH "TYPE BS" STRAINER 88
Z415 BODY ASSEMBLY WITH "TYPE BL" STRAINER 89
Z415 BODY ASSEMBLY WITH "TYPE BZ" LEVELING STRAINER 90
Z415 BODY ASSEMBLY WITH "TYPE C" STRAINER 91
Z415 BODY ASSEMBLY WITH "TYPE D" STRAINER 92
Z415 BODY ASSEMBLY WITH "TYPE E" STRAINER 93
Z415 BODY ASSEMBLY WITH "TYPE G" STRAINER 94
Z415 BODY ASSEMBLY WITH "TYPE H" STRAINER 95
Z415 BODY ASSEMBLY WITH "TYPE I" STRAINER 96
Z415 BODY ASSEMBLY WITH "TYPE J" HEEL-PROOF STRAINER 97
Z415 BODY ASSEMBLY WITH "TYPE K" STRAINER 98
Z415 BODY ASSEMBLY WITH "TYPE M" STRAINER AND SUR-SET BUCKET 99
Z415 BODY ASSEMBLY WITH "TYPE N" STRAINER 100
Z415 BODY ASSEMBLY WITH "TYPE S" STRAINER 101
ZS415 BODY ASSEMBLY WITH "TYPE SS" STRAINER 102
Z415 BODY ASSEMBLY WITH "TYPE SC" STRAINER 103
Z415 BODY ASSEMBLY WITH "TYPE SH" STRAINER 104
Z415 BODY ASSEMBLY WITH "TYPE SL" STRAINER 105
Z415 BODY ASSEMBLY WITH "TYPE SZ" LEVELING STRAINER 106
Z420 DEEP SHANK FLOOR AND SHOWER DRAIN FOR MARBLE AND GRANITE APPLICATIONS 107
Z450 DRUM TRAP DRAIN WITH "TYPE B" STRAINER 108
Z451 SHALLOW TRAP DRAIN WITH "TYPE B" STRAINER 109
Z453 DEEP SEAL TRAP DRAIN WITH "TYPE B" STRAINER 110
Z455 TRAP DRAIN WITH FLOOR CLEANOUT WITH "TYPE B" STRAINER 111
Z456 DEEP SEAL TRAP DRAIN WITH FLOOR CLEANOUT AND CLAMP COLLAR WITH "TYPE B" STRAINER 112
Z460B SHALLOW BODY FLOOR DRAIN WITH SIDE OUTLET AND "TYPE B" STRAINER 113
Z461 6" SQUARE MODULAR NON-ADJUSTABLE FLOOR DRAIN WITH CLAMPING FRAME 114
Z503 15" HEAVY-DUTY AREA DRAIN 114
Z505 12" HEAVY-DUTY DRAIN 115
Z507 7" MEDIUM-DUTY DRAIN 116
Z508 9" EXTRA-HEAVY-DUTY DRAIN 117
Z509 12" HEAVY-DUTY DRAIN 118
Z511 9" HEAVY-DUTY DRAIN 119
Z512 12-1/4" HEAVY-DUTY DRAIN 120
Z513 9" SQUARE HINGED HEAVY-DUTY DRAIN 121
Z520 9" ADJUSTABLE HEAVY-DUTY DRAIN 122
Z521 12" DIAMETER ADJUSTABLE HEAVY-DUTY DRAIN 123
Z526 12" ADJUSTABLE HEAVY-DUTY DRAIN 124
Z530 9" MEDIUM-DUTY WIDE FLANGE DECK DRAIN 125
Z531 9" ADJUSTABLE FRAME WIDE FLANGE MEDIUM-DUTY DECK DRAIN 125
Z532 12-1/4" DIAMETER WIDE FLANGE HEAVY-DUTY FLOOR DRAIN 126
Z533 9" DIAMETER HEAVY-DUTY PARKING DECK DRAIN WITH SUPPORT FLANGE 126
Z534 12-1/4" DIAMETER HEAVY-DUTY PARKING DECK DRAIN WITH SUPPORT FLANGE 127
Z535 HEAVY-DUTY PARKING STRUCTURE DRAIN 127
Z536 15-3/8" DIAMETER HEAVY-DUTY PARKING DECK DRAIN WITH SUPPORT FLANGE 128
Z537 15-7/8" SQUARE TOP HEAVY-DUTY PARKING DECK DRAIN WITH SUPPORT FLANGE 129
Z539 12-1/4" HEAVY-DUTY DRAIN WITH DEEP SUMP 129
Z540 12-1/4" MEDIUM-DUTY DRAIN WITH SUR-SET BUCKET 130
Z541 12-1/4" DIAMETER HEAVY-DUTY DRAIN 131
Z545 16" DIAMETER HEAVY-DUTY DRAIN 132
Z546 21-1/2" DIAMETER EXTRA HEAVY-DUTY DRAIN 133
Z547 21" DIAMETER EXTRA HEAVY-DUTY HEEL-PROOF PARKING DECK DRAIN WITH SUPPORT FLANGE 133
Z550 9" DIAMETER MEDIUM-DUTY DRAIN 134
Z551 9" DIAMETER MEDIUM-DUTY DRAIN 135
Z554 9" MEDIUM-DUTY DRAIN WITH SUR-SET BUCKET 136
Z556 8" ADJUSTABLE HEAVY-DUTY DRAIN 136
Z566 12" SQUARE OPEN TOP DRAIN 137
Z575 6" X 12" MEDIUM-DUTY GUTTER DRAIN 137
Z587 12-1/4" X 9-1/2" MEDIUM-DUTY DRAIN 138
Z609 9" SQUARE HEAVY-DUTY DRAIN 138
Z610 12-1/2" HEAVY-DUTY DRAIN 139
Z611 9" MEDIUM-DUTY DRAIN 140
Z624 ISOLATION DECK DRAIN 141
Z625 ADJUSTABLE ISOLATION DECK DRAIN 141
Z627 HEAVY-DUTY ADJUSTABLE ISOLATION DECK DRAIN 142
Z629 VERTICAL WALL DRAIN WITH BACKWATER VALVE 143
Z645 12-1/2" X 12-1/2" HEAVY-DUTY DRAIN 144
Z662 16" HEAVY-DUTY DRAIN 145
Z662-HF 16" HEAVY-DUTY DRAIN WITH HIGH FLOW DUCTILE IRON GRATE 146
Z664 6" WIDE HEAVY-DUTY MODULAR TRENCH DRAIN 147
Z665 12" WIDE HEAVY-DUTY MODULAR TRENCH DRAIN 148
Z667 6" WIDE MEDIUM-DUTY MODULAR TRENCH DRAIN 149
Z668 11-1/4" X 19-1/4" HEAVY-DUTY DRAIN 149
Z673 29" X 30" EXTRA HEAVY-DUTY DRAIN 150
Z675 13-1/2" EXTRA HEAVY-DUTY DRAIN 151
Z676 13-1/2" EXTRA HEAVY-DUTY DRAIN 151
Z730 9" TOP MEDIUM-DUTY DRAIN 152
Z742 LIGHT-DUTY TRAP DRAIN 153
Z761 12-1/2" X 12-1/2" HEAVY-DUTY DRAIN 154
VP-DRIVER VANDAL-PROOF DRIVER 154

TRAPS, PRIMERS, AND BACKWATER VALVES

TRAPS, PRIMERS, AND BACKWATER VALVES – APPLICATION INDEX 156
TRAPS, PRIMERS, AND BACKWATER VALVES – OPTIONS AND VARIATIONS 156
Z1072 ZSHIELD™ BARRIER TRAP SEAL DEVICE FOR FLOOR DRAINS 157
Z1000 DEEP SEAL TRAP 158
Z1005 DEEP SEAL TRAP WITH ADJUSTABLE COVER 158
Z1012 DEEP SEAL TRAP WITH FLOOR CLEANOUT 159
Z1019 FUNNEL DRAIN WITH "P" TRAP 159
Z1020XL ELECTRONIC TRAP PRIMER 160
Z1021 WATER SAVER TRAP PRIMER WITH 1-1/2" COPPER SWEAT WALL CONNECTION 160
Z1022-XL LEAD-FREE SANI-GARD AUTOMATIC TRAP PRIMER 161
Z1023 TRAP PRIMER CONNECTION ADAPTER 161
Z1024 FIXED AIR GAP 162
Z1025 FIXED AIR GAP 162
Z1030 HUB ADAPTER 163
Z1032 INSIDE CAULK REDUCER 163
Z1033 FEMALE PIPE THREAD REDUCER 164
Z1034 FEMALE PIPE ECCENTRIC REDUCER 164
Z1035 FLOOR DRAIN INSTALLATION STABILIZER 165
Z1035-Q STRUCTURAL DECK DRAIN STABILIZER 165
Z1036 FLOOR DRAIN INSTALLATION STABILIZER 166
Z1040 NO-HUB ADAPTER 166
Z1042 ELBOW ADAPTER 167
Z1088 BACKWATER VALVE GATE TYPE 167
Z1090 BACKWATER VALVE FLAPPER TYPE 168
Z1091 BACKWATER VALVE FLAPPER TYPE 168
Z1095 BACKWATER VALVE FLAPPER TYPE 169
Z1099 BACKWATER VALVE BALL FLOAT TYPE 170

TABLE OF CONTENTS - BY SECTION

INTERCEPTORS

INTERCEPTORS – GENERAL INFORMATION 172
INTERCEPTORS – APPLICATION INDEX 172
GREASE INTERCEPTORS – PURPOSE 172
GREASE INTERCEPTORS – OPERATION 173
Z250H FOG-CEPTOR® INTERCEPTOR 174
Z1165 100 PPM GREASE INTERCEPTOR SYSTEM WITH SOLIDS INTERCEPTOR 175
Z1170 GREASE INTERCEPTOR 176
Z1170-UN GREASE INTERCEPTOR WITH USER NOTIFICATION SYSTEM 177
ZS1170 GREASE INTERCEPTOR STAINLESS STEEL 178
Z1171 LOW PROFILE GREASE INTERCEPTOR 179
Z1171-TD LOW PROFILE GREASE INTERCEPTOR WITH ACCUMULATING CONE AND FLOW CONTROL TEE 180
Z1172 LARGE CAPACITY GREASE INTERCEPTOR 181
Z1172-UN LARGE CAPACITY GREASE INTERCEPTOR WITH USER NOTIFICATION SYSTEM 182
Z1173 EJECTO-MATIC GREASE INTERCEPTOR 183
Z1173-TD EJECTO-MATIC GREASE INTERCEPTOR WITH GREASE ACCUMULATING CONE AND IN-LINE SHUTOFF VALVE 184
Z1174 GREASE EATING BACTERIA DOSING UNIT AND SOLIDS INTERCEPTOR COMBINATION 185
SOLIDS INTERCEPTORS – GENERAL PRODUCT INFORMATION 186
SOLIDS INTERCEPTORS – APPLICATION INDEX 186
SOLIDS INTERCEPTORS – SIZING 186
Z1175 HAIR INTERCEPTOR 187
Z1176 HAIR INTERCEPTOR 187
Z1180 SOLIDS INTERCEPTOR 188
Z1181 SOLIDS INTERCEPTOR 188
Z1182 SIDE ACCESS SOLIDS INTERCEPTOR 189
Z1183 SOLIDS INTERCEPTOR 189
Z1183-DF SOLIDS INTERCEPTOR WITH DISPOSABLE FILTER BAGS 190
Z1183-FC SOLIDS INTERCEPTOR WITH FLUSH COVER 191
Z1184 BOTTOM ACCESS SOLIDS INTERCEPTOR 192
Z1185 LINT INTERCEPTOR 193
OIL INTERCEPTORS – GENERAL PRODUCT INFORMATION 194
OIL INTERCEPTORS – APPLICATION INDEX 194
Z1186 OIL INTERCEPTOR 195
Z1186-ST OIL INTERCEPTOR WITH INTEGRAL STORAGE TANK 196
Z1187 SAND AND SEDIMENT INTERCEPTOR 197
Z1187-SI SAND INTERCEPTOR 198
Z1188 LARGE CAPACITY OIL INTERCEPTOR 199
Z1188-ST LARGE CAPACITY OIL INTERCEPTOR WITH INTEGRAL STORAGE TANK 200
Z1189 OIL/SEDIMENT INTERCEPTOR WITH HEAVY-DUTY GRATE 201
Z1194 OIL LEVEL SENSOR RETROFIT KIT 202
Z1196 OIL INTERCEPTOR WITH OIL LEVEL SENSOR 203
Z1198 LARGE CAPACITY OIL INTERCEPTOR WITH OIL LEVEL SENSOR 204
Z1198-ST LARGE CAPACITY OIL INTERCEPTOR WITH INTEGRAL STORAGE TANK AND OIL LEVEL FLOAT SENSOR 205

CARRIER SYSTEMS

CARRIER – APPLICATION INDEX 208
CARRIER – PRODUCT COMPLIANCE 208
CARRIER – TECHNICAL DATA 208
CARRIER – HOW TO SPECIFY 208
CARRIER – TECHNICAL DATA 209
Z1200 CARRIER TOOLS AND ACCESSORIES 210
Z1201-N EZCARRY® ADJUSTABLE HORIZONTAL HIGH PERFORMANCE SIPHON JET – NO-HUB SERIES 212
Z1201-H EZCARRY® ADJUSTABLE HORIZONTAL HIGH PERFORMANCE SIPHON JET – HUB AND SPIGOT SERIES 214
Z1201-N-XB EZCARRY® BARIATRIC CARRIER – 1000 LB ADJUSTABLE HORIZONTAL SIPHON JET – NO-HUB SERIES 216
Z1201-N-XH EZCARRY® EXTRA HEAVY-DUTY 750 LB ADJUSTABLE HORIZONTAL SIPHON JET – NO-HUB SERIES 217
ZE1201-N EZCARRY® ADJUSTABLE HORIZONTAL SIPHON JET WITH ELONGATED FITTING – NO-HUB SERIES 218
ZE1201-H EZCARRY® ADJUSTABLE HORIZONTAL SIPHON JET WITH ELONGATED FITTING – HUB AND SPIGOT SERIES 220
ZF1201-N EZCARRY® HORIZONTAL SIPHON JET ONE-PIECE CARRIER – NO-HUB SERIES 222
ZN1201-N EZCARRY® ADJUSTABLE HORIZONTAL SIPHON JET – NO-HUB NARROW WALL SYSTEM (9-3/8" DEPTH FRONT TO BACK) 223
Z1202-N EZCARRY® ADJUSTABLE VERTICAL HIGH PERFORMANCE SIPHON JET – NO-HUB SERIES 224
Z1202-H EZCARRY® ADJUSTABLE VERTICAL HIGH PERFORMANCE SIPHON JET – HUB AND SPIGOT SERIES 226
Z1202-N-XB EZCARRY® BARIATRIC CARRIER – 1000 LB ADJUSTABLE VERTICAL SIPHON JET – NO-HUB SERIES 228
Z1202-N-XH EZCARRY® EXTRA HEAVY-DUTY 750 LB ADJUSTABLE VERTICAL SIPHON JET – NO-HUB SERIES 229
ZF1202-N EZCARRY® VERTICAL SIPHON JET ONE-PIECE CARRIER – NO-HUB SERIES 230
ZN1202-N EZCARRY® ADJUSTABLE VERTICAL SIPHON JET – NO-HUB NARROW WALL SYSTEM 231
Z1203-N ADJUSTABLE HORIZONTAL SIPHON JET – NO-HUB SERIES 232
Z1203-H ADJUSTABLE HORIZONTAL SIPHON JET – HUB AND SPIGOT SERIES 234
ZE1203-N ADJUSTABLE HORIZONTAL SIPHON JET WITH ELONGATED FITTING – NO-HUB SERIES 236
ZE1203-H ADJUSTABLE HORIZONTAL SIPHON JET WITH ELONGATED FITTING – HUB AND SPIGOT SERIES 238
Z1204-H ADJUSTABLE VERTICAL SIPHON JET – HUB AND SPIGOT SERIES 240
Z1204-N ADJUSTABLE VERTICAL SIPHON JET – NO-HUB SERIES 242
Z1207-N ADJUSTABLE HORIZONTAL HIGH ROUGH-IN SIPHON JET – NO-HUB 244
Z1208-N VERTICAL SIPHON JET WATER CLOSET SUPPORT SYSTEM – NO-HUB 245
Z1208-H VERTICAL SIPHON JET WATER CLOSET SUPPORT SYSTEM – HUB AND SPIGOT 246
Z1209-N VERTICAL OFFSET SIPHON JET WATER CLOSET SUPPORT SYSTEM – NO-HUB 247
ZN1209-N VERTICAL OFFSET SIPHON JET – NO-HUB NARROW WALL SYSTEM 248
Z1212 WALL CLOSET SUPPORT SYSTEM 249
Z1213-N 4" VERTICAL SIPHON JET WATER CLOSET SUPPORT SYSTEM – 2" OR 4" TOP VENT CLOSET FITTING ONLY (NO SUPPORT) 250
Z1216 90° DOUBLE NO-HUB SYSTEM FOR FLOOR MOUNTED BACK OUTLET WATER CLOSETS 251
Z1217 COUPLING TYPE SYSTEM – WALL URINAL/SERVICE SINK 252
Z1218 COUPLING TYPE SYSTEM – WALL URINAL/SERVICE SINK 253
Z1221 PLATE TYPE SYSTEM – WALL URINALS 254
Z1222 PLATE TYPE SYSTEM – WITH BEARING PLATE 254
Z1223 PLATE TYPE SYSTEM – TROUGH URINALS 255
Z1224 PLATE TYPE SYSTEM – LAVATORY WITH BACK 255
Z1225 PLATE TYPE SYSTEM – WATER COOLERS 256
Z1229 PLATE AND EXPOSED ARM – HEAVY SINKS 256
Z1231 CONCEALED ARM SYSTEM – WALL LAVATORIES 257
Z1231-EZ CONCEALED ARM SYSTEM – WALL LAVATORIES 257
Z1231-EZR CONCEALED ARM SYSTEM – FOR WALL LAVATORIES WITH ADJUSTABLE UPRIGHTS AND HEADER PLATES 258
Z1236 EXPOSED ARM SYSTEM – WALL LAVATORIES/SINKS 259
Z1251 CONCEALED ARM SYSTEM – WALL SUPPORTED 260
Z1253 ADJUSTABLE CONCEALED ARM SYSTEM – WALL SUPPORTED 260
Z1255 EXPOSED ARM SYSTEM – WALL SUPPORTED 261
Z1256 EXPOSED ARM SYSTEM – WALL SUPPORTED 262
Z1257 EXPOSED ARM SYSTEM – WALL SUPPORTED 262
Z1258 EXPOSED ARM SYSTEM – WALL SUPPORTED 263
Z1259 PLATE SYSTEM – WALL SUPPORTED 264
Z1280 WOOD STUD SUPPORTED WATER CLOSET CARRIER – NO-HUB 265
Z1282 WOOD STUD SUPPORTED WATER CLOSET CARRIER – HUB AND SPIGOT 265
Z1283 WOOD STUD SUPPORTED WATER CLOSET CARRIER – PLASTIC PIPE 266

TABLE OF CONTENTS - BY SECTION

Z1284 CONCRETE FLOOR SUPPORTED WATER CLOSET CARRIER 266

Z1285 WOOD STUD SUPPORTED WATER CLOSET CARRIER 267

Z1290 EASTERN STYLE WATER CLOSET 268

HYDRANTS

HYDRANTS - APPLICATION INDEX 270

Z1300 ECOLOTROL WALL HYDRANT – ENCASED, NON-FREEZE, ANTI-SIPHON, AUTOMATIC DRAINING 271

Z1305 WALL HYDRANT – ENCASED, NON-FREEZE 271

Z1310 ECOLOTROL WALL HYDRANT – EXPOSED, NON-FREEZE, ANTI-SIPHON, AUTOMATIC DRAINING 272

Z1315 WALL HYDRANT – EXPOSED, NON-FREEZE 272

Z1320XL ECOLOTROL CERAMIC DISC WALL HYDRANT – ENCASED, NON-FREEZE, ANTI-SIPHON, AUTOMATIC DRAINING 273

Z1320XL-EZ ECOLOTROL CERAMIC DISC WALL HYDRANT – ENCASED, NON-FREEZE, ANTI-SIPHON, AUTOMATIC DRAINING 273

Z1321XL ECOLOTROL CERAMIC DISC WALL HYDRANT – EXPOSED, NON-FREEZE, ANTI-SIPHON, AUTOMATIC DRAINING 274

Z1322XL-EZ ECOLOTROL CERAMIC DISC WALL HYDRANT – EXPOSED, NON-FREEZE, ANTI-SIPHON, AUTOMATIC DRAINING 275

Z1325 WALL HYDRANT – ENCASED, VARI-TEMP, NON-FREEZE 276

Z1327-EZ NARROW WALL HOT/COLD HYDRANT WITH MOUNTING BRACKETS – ENCASED, MODERATE CLIMATE 276

Z1330XL ECOLOTROL CERAMIC DISC WALL HYDRANT – ENCASED, ANTI-SIPHON, AUTOMATIC DRAINING, MODERATE CLIMATE 277

Z1332XL-EZ ECOLOTROL CERAMIC DISC WALL HYDRANT – ENCASED, ANTI-SIPHON, AUTOMATIC DRAINING, MODERATE CLIMATE 277

Z1333XL ECOLOTROL CERAMIC DISC WALL HYDRANT – EXPOSED, ANTI-SIPHON, AUTOMATIC DRAINING, MODERATE CLIMATE 278

Z1335 WALL HYDRANT – ENCASED, MODERATE CLIMATE 278

Z1350 NARROW WALL HYDRANT – ENCASED, MODERATE CLIMATE 279

Z1350-EZ NARROW WALL HYDRANT WITH MOUNTING BRACKETS – ENCASED, MODERATE CLIMATE 279

Z1360XL GROUND HYDRANT – ENCASED, FLUSH TYPE, NON-FREEZE 280

Z1365 GROUND HYDRANT – ENCASED, FLUSH TYPE, NON-FREEZE 281

Z1370 GROUND HYDRANT – ENCASED, HOSE STORAGE, NON-FREEZE 282

Z1375 GROUND HYDRANT – ENCASED, MODERATE CLIMATE, INTERIOR USE 283

Z1385 POST HYDRANT – EXPOSED HEAD, NON-FREEZE 283

Z1388XL ROOF HYDRANT – EXPOSED HEAD, NON-FREEZE 284

Z1390 POST HYDRANT – EXPOSED HEAD, NON-FREEZE 284

Z1395XL YARD HYDRANT – EXPOSED HEAD, NON-FREEZE 285

Z1397XL FLO-TROL YARD HYDRANT – EXPOSED HEAD, NON-FREEZE 286

CLEANOUTS

CLEANOUTS – APPLICATION INDEX 288

Z1400-BZ1 FLOOR CLEANOUT WITH "TYPE B" COVER AND EZ1™ TECHNOLOGY 289

Z1400-SZ1 BODY ASSEMBLY W/ "TYPE S" COVER AND EZ1™ TECHNOLOGY 290

Z1400-BZ1-DP BODY ASSEMBLY W/ "TYPE B" COVER, DECK PLATE AND EZ1™ TECHNOLOGY 291

Z1400-SZ1-DP BODY ASSEMBLY W/ "TYPE S" COVER, DECK PLATE AND EZ1™ TECHNOLOGY 292

Z1400B-DP BODY ASSEMBLY W/ "TYPE B" COVER AND DECK PLATE 293

Z1400S-DP BODY ASSEMBLY W/ "TYPE S" COVER AND DECK PLATE 294

Z1400 EXTRA HEAVY-DUTY "LEVEL-TROL" ADJUSTABLE FLOOR CLEANOUT 295

Z1400-BZ "LEVEL-TROL" ADJUSTABLE LEVELING FLOOR CLEANOUT 296

Z1400-SZ "LEVEL-TROL" SQUARE ADJUSTABLE LEVELING FLOOR CLEANOUT 297

Z1400-K HEAVY-DUTY "LEVEL-TROL" ADJUSTABLE FLOOR CLEANOUT WITH ANCHOR FLANGE 298

Z1402 HEAVY-DUTY NON-ADJUSTABLE FLOOR CLEANOUT 299

Z1404 HEAVY-DUTY FLOOR ACCESS HOUSING 300

Z1406 HEAVY-DUTY ADJUSTABLE SPIGOT CLEANOUT 300

Z1440 CLEANOUT FERRULE WITH PLUG 301

Z1445 CLEANOUT TEE 302

Z1446 CLEANOUT WITH ROUND WALL ACCESS COVER 302

Z1449 CLEANOUT FERRULE WITH PLUG 303

Z1454 ADJUSTABLE FLOOR CLEANOUT WITH FLASHING FLANGE 303

Z1456 DECK CLEANOUT 304

Z1457 FLOOR ACCESS COVER 304

Z1460 SQUARE WALL ACCESS PANEL 305

Z1461 SQUARE HINGED ACCESS PANEL 305

Z1462 SECURED WALL ACCESS PANEL 306

Z1463 ROUND SCORIATED ACCESS COVER 306

Z1464 WATER SUPPLY CONTROL BOX ASSEMBLY 307

Z1468 ACCESS COVER AND PLUG 307

Z1469 ROUND ACCESS COVER 308

Z1470 BRONZE CLEANOUT PLUG 308

Z1471 AIR INLET 309

Z1474 HEAVY-DUTY CLEANOUT HOUSING 309

WATER HAMMER ARRESTORS

Z1700 SHOKTROLS 312

Z1712 ACCUMUTROL 312

STAINLESS STEEL DRAINS

STAINLESS STEEL DRAINS – APPLICATION INDEX 314

STAINLESS STEEL DRAINS – BUTT-WELD ENGINEERING DATA 314

Z1715 15" DIAMETER ROOF DRAIN 315

Z1717 SCUPPER DRAIN 315

Z1720 4" X 8" OPEN SIGHT DRIP DRAIN 316

Z1721 6" X 12" OPEN SIGHT DRIP DRAIN 316

Z1724 ROUND FUNNEL 317

Z1725 OVAL FUNNEL 317

Z1726 ADJUSTABLE MEDIUM DUTY FLOOR DRAIN WITH ROUND TOP 318

Z1727 ADJUSTABLE MEDIUM DUTY FLOOR DRAIN WITH SQUARE TOP 319

Z1730 9" DIAMETER HEAVY-DUTY SHALLOW TYPE FLOOR DRAIN 320

Z1731 9" DIAMETER HEAVY-DUTY MEDIUM DEPTH FLOOR DRAIN 320

Z1732 9-5/8" DIAMETER HEAVY-DUTY ADJUSTABLE FLOOR DRAIN 321

Z1735 12" DIAMETER HEAVY-DUTY FLOOR DRAIN 321

Z1736 12" DIAMETER EXTRA HEAVY-DUTY FLOOR DRAIN 322

Z1737 15" DIAMETER EXTRA HEAVY-DUTY FLOOR DRAIN 322

Z1739 PIT DRAIN 323

Z1740 BACKWATER VALVE 323

Z1745 FLOOR CLEANOUT WITH O-RING SEAL PLUG 324

Z1749 12" X 12" SANI-FLOR RECEPTOR WITH 4" SUMP DEPTH 325

Z1750 12" X 12" SANI-FLOR RECEPTOR WITH 6" SUMP DEPTH 326

Z1751 12" X 12" SANI-FLOR RECEPTOR WITH 8" SUMP DEPTH 327

Z1752 12" X 12" SANI-FLOR RECEPTOR WITH 10" SUMP DEPTH 328

Z1755 13-3/8" SQUARE SANI-FLOR RECEPTOR 6" SUMP WITH ADJUSTABLE CLAMP FRAME 329

Z1761 24-5/16" SQUARE KETTLE DRAIN WITH 8" SUMP DEPTH 329

Z1762 25" X 15-1/2" KETTLE DRAIN 330

Z1763 37-9/16" X 22-7/8" KETTLE DRAIN 331

TABLE OF CONTENTS - BY SECTION

FABRICATED STAINLESS STEEL DRAINS

ZS880 STAINLESS STEEL LINEAR SHOWER DRAIN 334

Z1800-6B 6" DIAMETER INDUSTRIAL FLOOR DRAIN 4-19/32" SUMP DEPTH 335

Z1800-8B 8" DIAMETER INDUSTRIAL FLOOR DRAIN 6" SUMP DEPTH 336

Z1800-8S 8" X 8" INDUSTRIAL FLOOR DRAIN 6" SUMP DEPTH 336

Z1800-12B 12" DIAMETER INDUSTRIAL FLOOR DRAIN 6" SUMP DEPTH 337

Z1800-12S 12" X 12" INDUSTRIAL FLOOR DRAIN 6" SUMP DEPTH 337

Z1810-6B 6" DIAMETER ADJUSTABLE INDUSTRIAL FLOOR DRAIN 338

Z1810-8B 8" DIAMETER ADJUSTABLE INDUSTRIAL FLOOR DRAIN 338

Z1810-8S 8" X 8" ADJUSTABLE INDUSTRIAL FLOOR DRAIN 339

Z1810-12B 12" DIAMETER ADJUSTABLE INDUSTRIAL FLOOR DRAIN 339

Z1810-12S 12" X 12" ADJUSTABLE INDUSTRIAL FLOOR DRAIN 340

Z1820-8B 8" DIAMETER INDUSTRIAL FLOOR DRAIN WITH SIDE OUTLET 340

Z1820-8S 8" X 8" INDUSTRIAL FLOOR DRAIN WITH SIDE OUTLET 341

Z1820-12B 12" DIAMETER INDUSTRIAL FLOOR DRAIN WITH SIDE OUTLET 341

Z1820-12S 12" X 12" INDUSTRIAL FLOOR DRAIN WITH SIDE OUTLET 342

Z1830-8B 8" DIAMETER INDUSTRIAL FLOOR DRAIN 8" SUMP DEPTH 342

Z1830-8S 8" X 8" DIAMETER INDUSTRIAL FLOOR DRAIN 8" SUMP DEPTH 343

Z1830-12B 12" DIAMETER INDUSTRIAL FLOOR DRAIN 8" SUMP DEPTH 343

Z1830-12S 12" X 12" INDUSTRIAL FLOOR DRAIN 8" SUMP DEPTH 344

Z1840-6B 6" DIAMETER INDUSTRIAL FLOOR CLEANOUT 344

Z1840-6S 6" X 6" INDUSTRIAL FLOOR CLEANOUT 345

Z1840-8B 8" DIAMETER INDUSTRIAL FLOOR CLEANOUT 345

Z1840-8S 8" X 8" INDUSTRIAL FLOOR CLEANOUT 346

SANI-FLOR RECEPTORS

SANI-FLOR RECEPTORS – MATERIAL SELECTION 348

SANI-FLOR RECEPTORS – OPTIONS AND VARIATIONS 348

Z1900 12" X 12" A.R.E. SANI-FLOR RECEPTOR WITH 6" SUMP DEPTH 349

Z1900-RL 12" X 12" X 6" REPLACEMENT FLOOR SINK LINER 350

Z1901 12" X 12" A.R.E. SANI-FLOR RECEPTOR WITH 8" SUMP DEPTH 351

Z1901-RL 12" X 12" X 8" REPLACEMENT FLOOR SINK LINER 352

Z1902 12" X 12" A.R.E. SANI-FLOR RECEPTOR WITH 10" SUMP DEPTH 353

Z1902-RL 12" X 12" X 10" REPLACEMENT FLOOR SINK LINER 354

Z1903 SANI-FLOR RECEPTOR INSTALLATION STABILIZER 354

Z1910 8" X 8" A.R.E. SANI-FLOR RECEPTOR WITH 6" SUMP DEPTH 355

Z1910-RL 8" X 8" X 6" REPLACEMENT FLOOR SINK LINER 356

Z1920 16" X 16" A.R.C. SANI-FLOR RECEPTOR WITH 7" SUMP DEPTH 357

Z1926 16" X 16" A.R.C. SANI-FLOR RECEPTOR WITH 12" SUMP DEPTH 358

Z1930 8" X 4" A.R.C. SANI-FLOR RECEPTOR WITH 4" SUMP DEPTH 359

Z1940 12" X 6" A.R.C. SANI-FLOR RECEPTOR WITH 8" SUMP DEPTH 360

Z1950 12" DIAMETER A.R.E. SANI-FLOR RECEPTOR WITH 8" SUMP DEPTH 361

Z1960 8" DIAMETER A.R.E. SANI-FLOR RECEPTOR WITH 6" SUMP DEPTH 362

Z1970 9" DIAMETER SHALLOW A.R.C. SANI-FLOR RECEPTOR WITH 3" SUMP DEPTH 363

Z1982 12" X 12" STAINLESS STEEL SANI-FLOR CAN WASH DRAIN WITH 8" SUMP DEPTH 364

Z1995 24" X 16" A.R.C. SANI-FLOR RECEPTOR WITH 17" SUMP DEPTH 364

TECHNICAL INFORMATION

TECHNICAL INFO - ZURN OUTLET PIPE CONNECTIONS 366

TECHNICAL INFO - TOP LOADING CLASSIFICATION 367

TECHNICAL INFO - ZURN MATERIALS AND FINISHES 368

GENERAL TERMS AND CONDITIONS 376

NOTE: Items designated as best sellers are most specified and are generally in stock for shipment.

Items contained in the legacy configuration addendum are still available to support legacy specification but may be subject to longer lead-times. Call factory for availability or suggested substitution of a recommended best seller.

PRODUCT HIGHLIGHT

Patented

Z250H FOG-CEPTOR® INTERCEPTOR

Separating Itself from the Competition, FOG-ceptor Provides a Fast, Cost-Effective Solution When It Matters Most

When your interceptor fails, you need a fast, easy solution to get your business operating again. The Z250H FOG-ceptor interceptor is cost-effective, easy to maintain and ships within 24-48 hours. Backed by a 30-year warranty, the FOG-ceptor is made of durable fiberglass, and provides superior performance with less maintenance. Choose Zurn for innovative product solutions; a name you can trust for all your commercial plumbing needs.

Total package shipped and ready for installation

Optional: Electronic monitoring Smartpro® wireless system monitors grease and sediment with the push of a button

Versatile

- Reduces maintenance with smooth, fiberglass construction for fast, complete pump-outs and easy rinse down – SAVING TIME AND MONEY
- Replaces failed interceptors in buried and above ground applications including in-kitchen, exterior landscaped or traffic-rated areas, semi-recessed, and burial installations
- Retrofits fat, oil, or grease interceptors, with superior performance for the life of your building

Reliable

- Locally stocked for fast delivery- keeping your business running with minimal disruption
- Third-party certified to national performance standards PDI and UPC
- Reliable performance, backed by a 30-year guarantee

See page 200 for ordering information.

A SPEEDY SETUP

Sold complete and ready to install, EZ1 is an intuitive product that saves contractors time and money.

LONG-TERM DURABILITY

Whether cast iron or plastic, EZ1 is crafted to stand up against wear and tear over the product's lifecycle.

DESIGNED TO RUN LIKE CLOCKWORK

EZ1's integrated engineering, which includes an easy post-pour adjustment and tilt accessory package, delivers high-level functionality and requires minimal skill to install or maintain.

Introducing the EZ1™, It's About Time

Contractors have waited long enough for a floor drain that's easy to install and built for the long haul. Zurn's EZ1–available in cast iron and plastic–comes out of the box as a complete system, allows for post-pour adjustment with an integrated strainer, provides job-site flexibility and maintains ongoing reliability. Don't hesitate. Make the EZ choice. *Learn more at zurn.com/ez1*

ZURN®

ZURN.COM

US 1.855.ONE.ZURN **CANADA** 1.877.892.5216

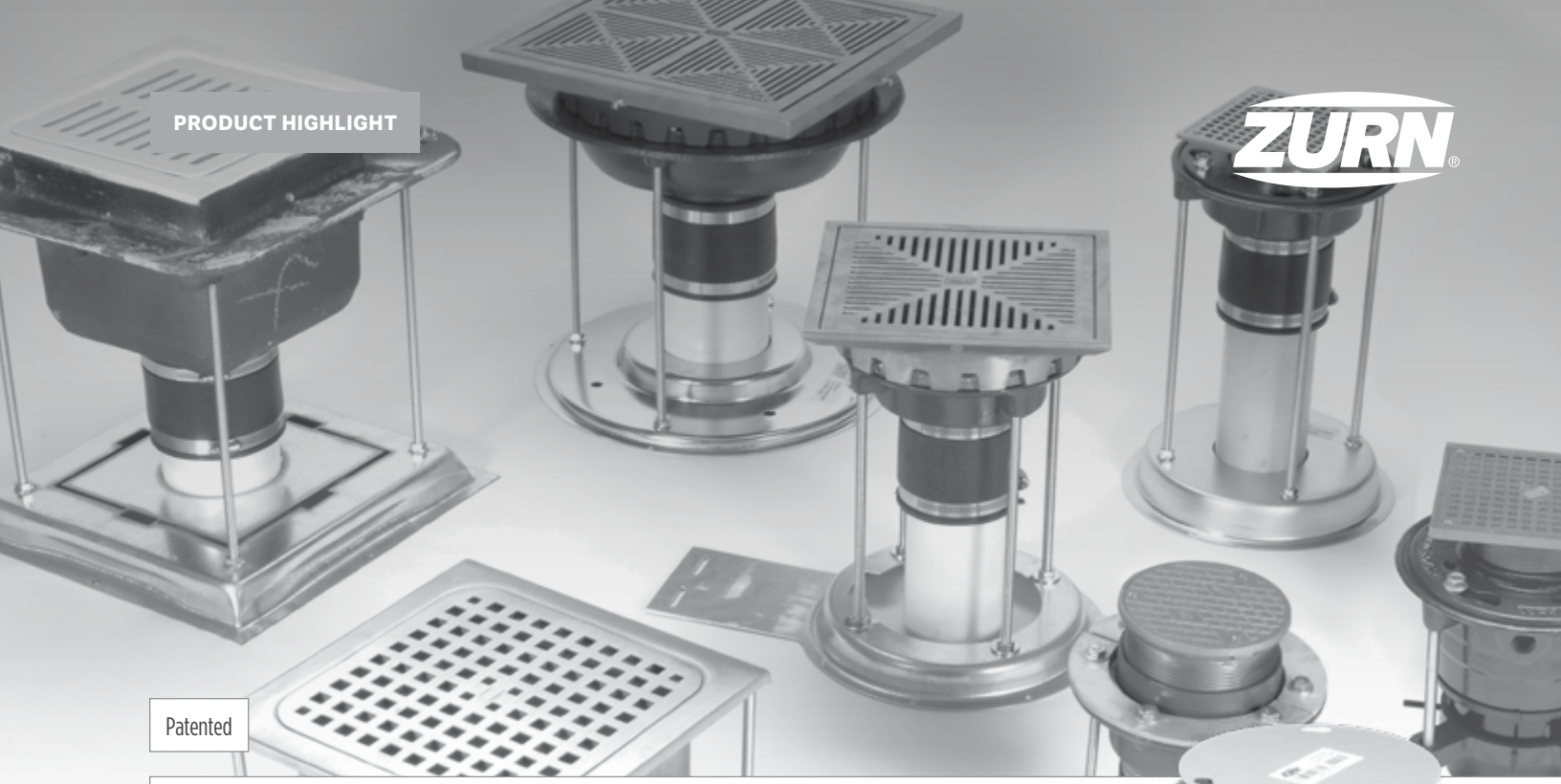

PRODUCT HIGHLIGHT

Patented

STABILIZER SOLUTIONS

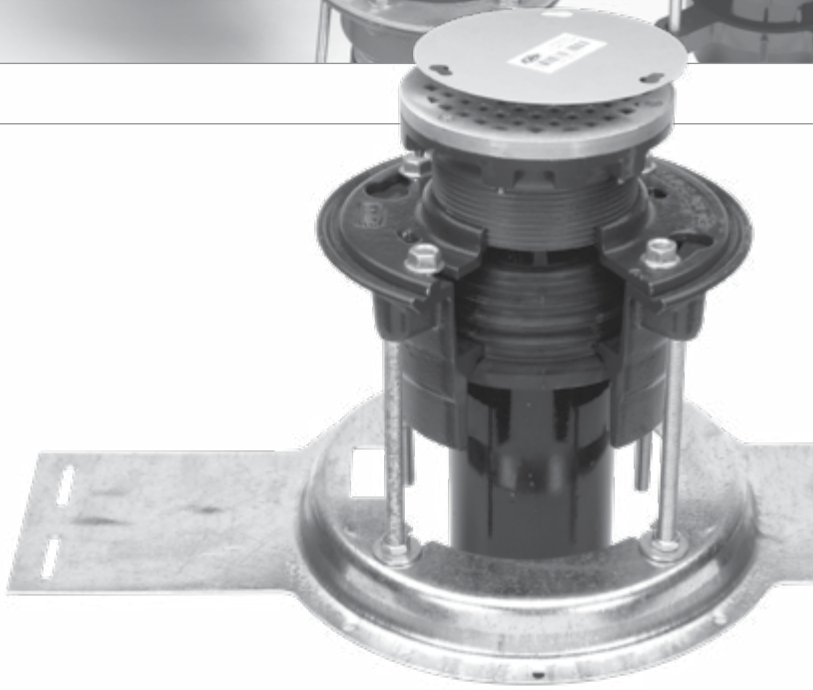

Stabilization Achieved with Zurn's Patented Solutions for Common Installation Concerns

Labor Savings

- System secures drain to stub-out pipe, sub floor or structural deck to prevent movement during installation process
- Pre-assembly to rough-in height allows for quick and easy job site placement
- Stabilizing system keeps drain secured in concrete, eliminating the need for fire stop, drypack, and grout to hold the drain in place

Versatility

- Z400-SR Stabilizing Ring for 8-3/8. floor drain for stub out installation
- Z1035 Stabilizer Plate for 8-3/8″ floor drain and Z1400-K cleanout for sub floor installation
- Z1035-Q Stabilizer Plate for 8-3/8″ floor drain and Z1400-K cleanout for structural deck installation
- Z1036 Stabilizer Plate for 12″ and 15″ sub floor installation
- Z1903 Stabilizer Plate for Z1900 A.R.E floor sink and Z1750 stainless floor sinks for sub floor installation

See pages 79, 165-166, 354 for ordering information.

Patented

THE RACE FOR TIME - Z1231-EZ

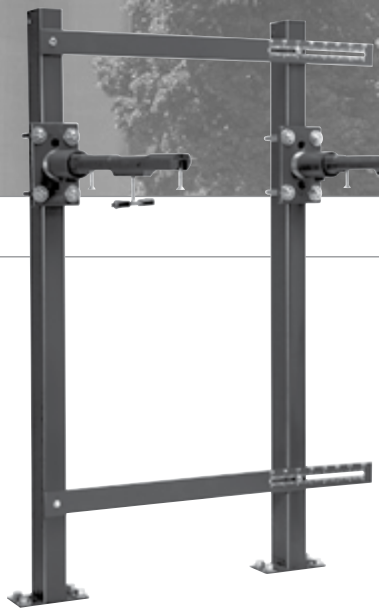

Zurn Labor-Saving Products Help New York Healthcare Facility to Build Quickly and Affordably

The Erie County Medical Center (ECMC) in Buffalo, New York needed to replace the 80-year-old Erie County Nursing Home, formerly of Alden, New York, as the home was quickly running out of space to provide effective, long-term patient care. The original two-year construction plan was revised with an accelerated project completion of 15 months. ECMC needed a plumbing contractor who could provide a labor-saving solution to meet their aggressive deadline.

The Lavatory EZ Carriers (Z1231-EZ) were key labor-saving products installed at ECMC. These concealed arm lavatory carriers are assembled and pre-packaged at the factory. Once on site, the scale on the adjusting bars lets you quickly set centerline dimensions. This allows for less work at the site, and a reduction in overall installation time.

"My workers in the field prefer to use Zurn products," says Chad Krajewski. "They're well made, reliable, sturdy, and are easy to assemble. It's also comforting to know that Zurn provides a variety of customizations which will help a product or installation meet specific site requirements." Krajewski added that these carriers were significant time savers that fit well into his construction plans.

> "I chose Zurn products because I was looking to save time...Many construction projects now are 'hurry-up,' and clients want them to be completed in record time while still significantly cutting labor costs. Today, with tighter schedules and less room to spend on construction projects, Zurn solutions are a great option for contractors."
>
> **CHAD KRAJEWSKI**
> Plumbing Foreman, MLP Plumbing.

See page 257 for ordering information.

This symbol denotes a product that is engineered to reduce installation and rework time.
For additional product information, please visit zurn.com/laborsavings

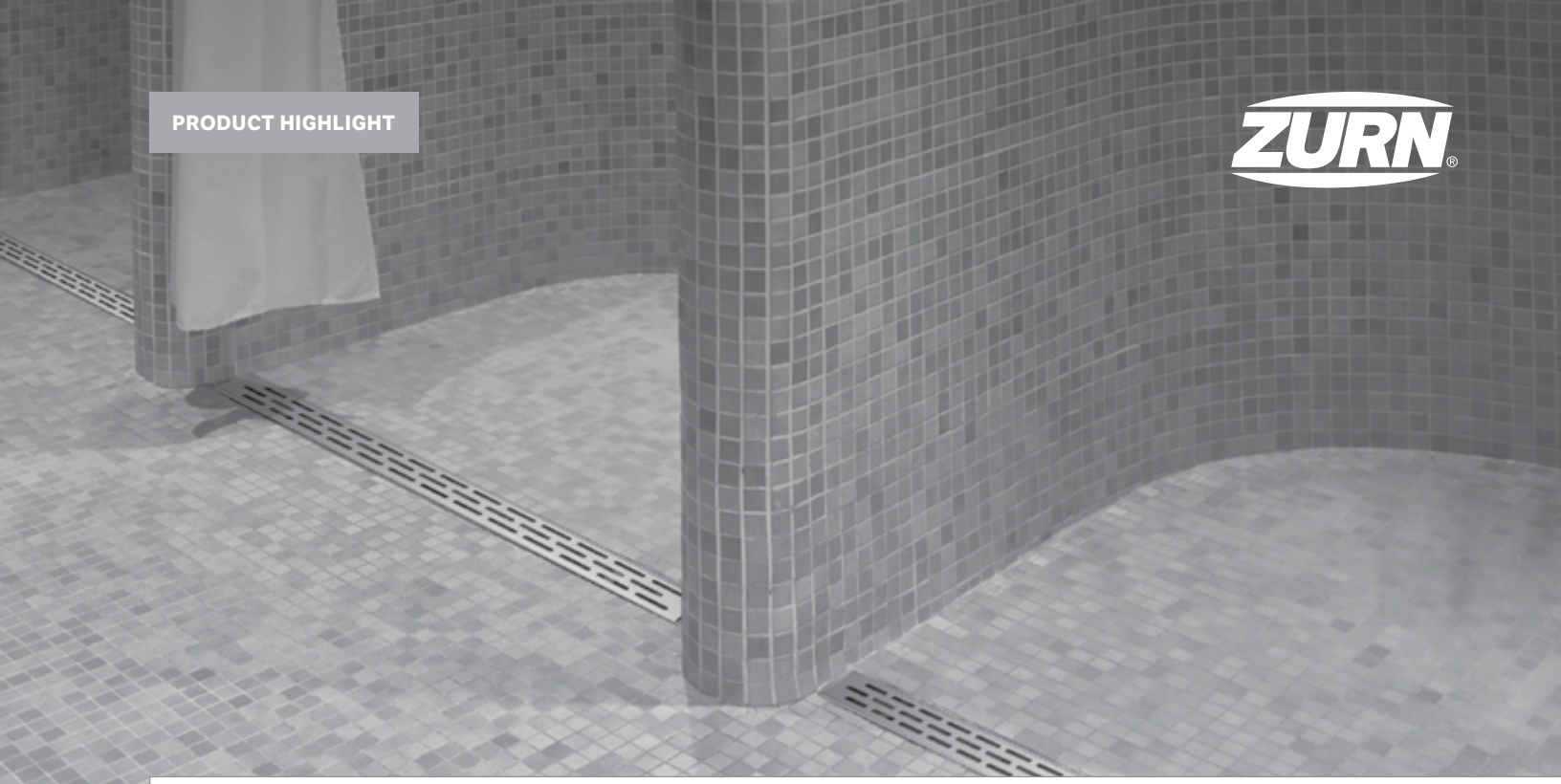

PRODUCT HIGHLIGHT

ZS880 STAINLESS STEEL LINEAR SHOWER DRAIN

Beauty Meets Function and Performance - Ideal for Residential, Health Care, and Hospitality Applications

-LS Linear Slotted Grate

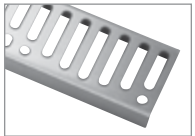

-WG Wave Grate

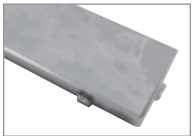

-TG Tile Inlay Grate

-BW Basket Weave Grate

-DB Decorative Block Grate

-SG Serenity Grate

Discover how easy it can be to create a barrier-free shower enclosure that delivers reliable performance and architectural design. The ZS880 eliminates the need to slope the finished flooring in multiple directions, allowing drainage of a substantially larger floor surface area than traditional shower drains. Instead, pitch the floor in one direction towards the linear shower drain, and finish the job in record time. A beautiful installation has never been so simple.

Innovative

- Patent pending frame and grate features allow effortless height and level adjustment, reducing pooling
- Barrier-free installation creates accessibility and freedom in applications requiring ADA compliance
- Performance engineered channel promotes superior water evacuation

Labor Saving

- Integral tiling edge reduces installation time while protecting flooring from damage
- Adjustable anchoring feet provide stability before and during the concrete pour
- Integral flange allows hassle-free membrane attachment
- Type 304 stainless steel construction provides corrosion resistance, durability, and low maintenance

Versatile

- Extensive grating design and decorative finish options enhance aesthetic appeal
- Low-profile design allows installation in 2" over pour
- Customization available to suit an array of project needs

See page 334 for ordering information.

PRODUCT HIGHLIGHT

Patented

ZURN TOP-SET® DECK PLATE

The -DP Option is Top of Class, with a Proven Feature Set That Will Save Time and Money

Labor Saving

- -DP option features ease of installation for quick job completion
- Entire roof drain assembly installed from topside of roof requiring only pipe connection installation underside roof
- Deck plate replaces the need for separate under deck clamps and roof-sump receivers
- Pipe connection is completed

Versatility

- Three size (-DP) for trouble-free fit 8″, 12″, and 15″ diameter drains
- Multiple slot arrangements to accommodate a variety of roof decks
- Constructed of 14-guage steel with a corrosive-resistant finish

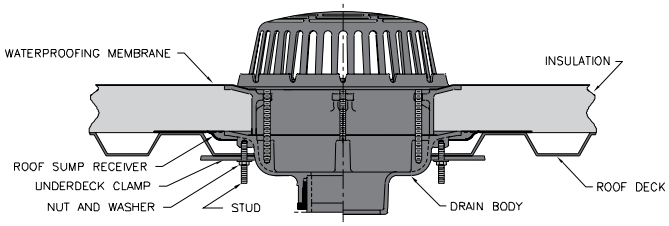

Old Way

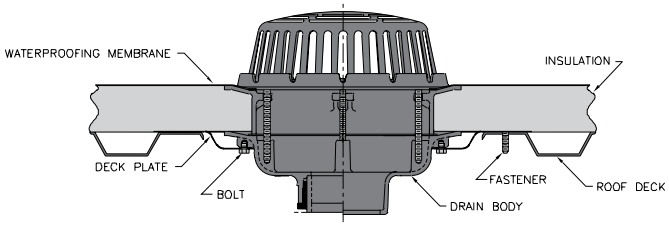

New Way

See (-DP) in the roof drain section for ordering information.

This symbol denotes a product that is engineered to reduce installation and rework time.

For additional product information, please visit zurn.com/laborsavings

PRODUCT HIGHLIGHT

Z130 SIPHONIC ROOF DRAIN WITH DECK PLATE

Full-Bore Flow Achieved Siphonic Technology Provides a Higher Velocity and Flow Volume

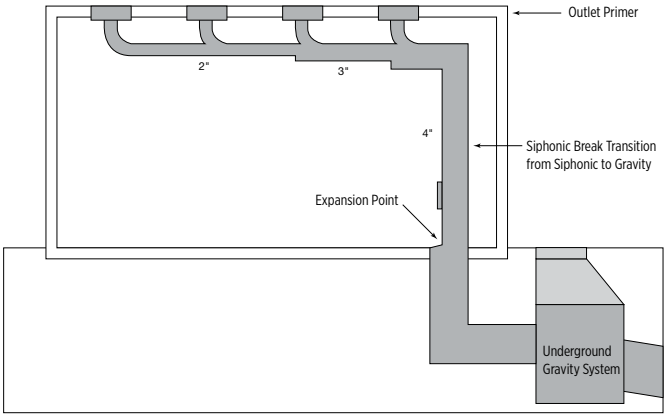

Siphonic Roof Drain System

How It Works

- Siphonic drainage can be achieved by adding/securing a highly engineered air baffle to the sump of a standard conventional drain
- This air baffle prevents vortex flow while restricting air from entering the vertical tailpipe and horizontal collector piping
- As water forces air out, a negative head pressure is created in the collector pipe and the water is sucked off the roof
- In a Zurn Siphonic Drain, full-bore flow occurs with 2″ of water above the air baffle
- Multiple drains can flow into a common horizontal collector pipe. This pipe eventually turns downward into a vertical downspout and transfers to conventional gravity drainage when below grade.
- When not operating under full flow, the system drains like a gravity system

Benefit Summary of a Zurn Siphonic System

- No pitch requirement in piping to induce flow
- Smaller pipe diameters get equal flow rates
- Flow Rates of Zurn Siphonic:
  2″ - 149 gpm, 3″ - 380 gpm, 4″ - 704 gpm
- Vertical stack placement is flexible
- No cleanouts necessary in system. Higher flow velocities help to clean pipes
- More efficient than conventional drainage
- Use of recycled materials

See page 41 for ordering information.

This symbol denotes a product that is engineered to reduce installation and rework time.

For additional product information, please visit zurn.com/laborsavings

Z130 SIPHONIC ROOF DRAIN WITH DECK PLATE

Components of a Siphonic System

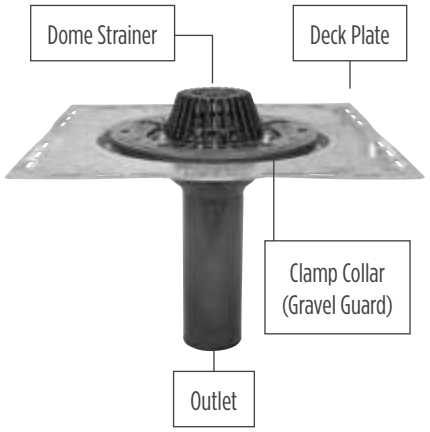

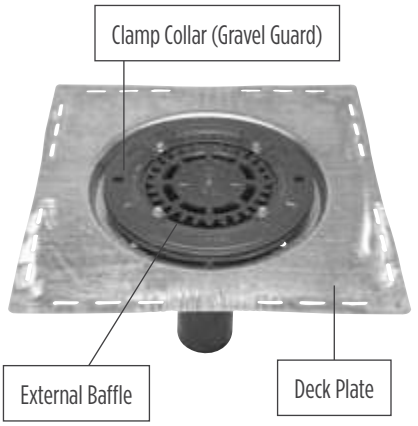

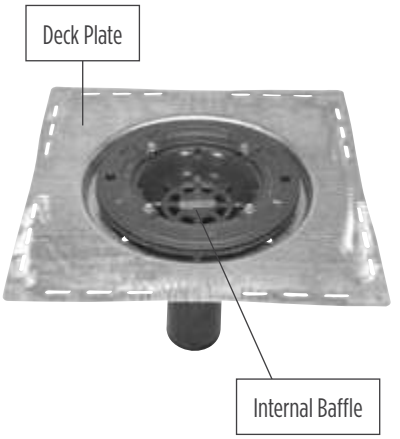

Plan a Custom Siphonic System

To determine the number of drains:

1. Select location of the drains on the roof.
2. Select the location of the down pipe.
3. Horizontal collector pipe length should not exceed 20 times the building height.
4. Maximum distance between SDS drains with a common collector pipe is 65 feet.
5. Use the chart below to select the number of drains based on square feet and rainfall data.

Note: This tool can be used for a quick estimate for number of drains - must have system designed by Zurn for complete piping layout.

Siphonic Design Questions

Please fill out the questions below along with building plans including roof layout and building sections as a DWG file.

1. What kind of roof construction is it? (details, surface)
2. What are the measurements of the sections of the roof?
3. Is there a specific location the roofer would like the drains to be placed?
4. Will a rainwater harvesting system be used on this project?
5. What is the rainfall data for the area?
6. Do you have ground plans for the building sections?
7. Where do you want the down pipe located?
8. What material of piping are you using? (PVC, cast iron)
9. What is the minimum height of the horizontal drainage pipe?
10. Are there any specific areas where drains cannot be located?
11. Are overflow drains required?

SDS with Air Baffle, Machined Collar Clamp, and Zurn Dome

ROOF DRAIN VERTICAL REQUIREMENT FOR HORIZONTAL ROOF AREAS AT VARIOUS RAINFALL RATES											
LEADER SIZE		HOURLY RAINFALL IN INCHES									
PIPE SIZE (IN.)	OPEN AREA (SQ. IN.)	1	1.5	2	2.5	3	4	5	6	7	8
		TOTAL SQUARE FOOTAGE COVERED PER DRAIN*									
2	2.66	14,188	9,458	7,094	5,675	4,729	3,547	2,837	2,364	2,026	1,773
3	6.33	36,614	24,409	18,307	14,645	12,204	9,153	7,322	6,102	5,230	4,576
4	12.17	67,736	45,157	33,868	27,094	22,578	16,934	13,547	11,289	9,676	8,467

*Theoretical value based on ideal condition of our tests in the University of Munich (without safety factor).

See page 41 for ordering information.

This symbol denotes a product that is engineered to reduce installation and rework time.

For additional product information, please visit zurn.com/laborsavings

PRODUCT HIGHLIGHT

GREEN ROOFING DRAINAGE SOLUTIONS

It's Easy Being Green

Having proper drainage on a green roof is a critical aspect of the system. If the system is not able to drain properly, it can negatively impact the vegetation due to over-saturation of the soil. As the soil takes on excessive amounts of water, it continues to add weight to the roofing structure. This added load has the potential to compromise the structural integrity of the roof. In order to prevent these situations from occurring, the roof drain must allow adequate flow through the drain at all times.

Performance

Stainless steel perforated extension allows for optimal flow into the roof drain while simultaneously keeping debris out.

Ease of Maintenance

Removable lid allows for easy routine maintenance.

Versatility

Customizable enclosures guarantee the roof drain aligns with the green roof surface and offer an aesthetically appealing finish to the roof environment.

Flexibility

Simplify the installation process by customizing the order to ship the perforated extension after the drain has been installed

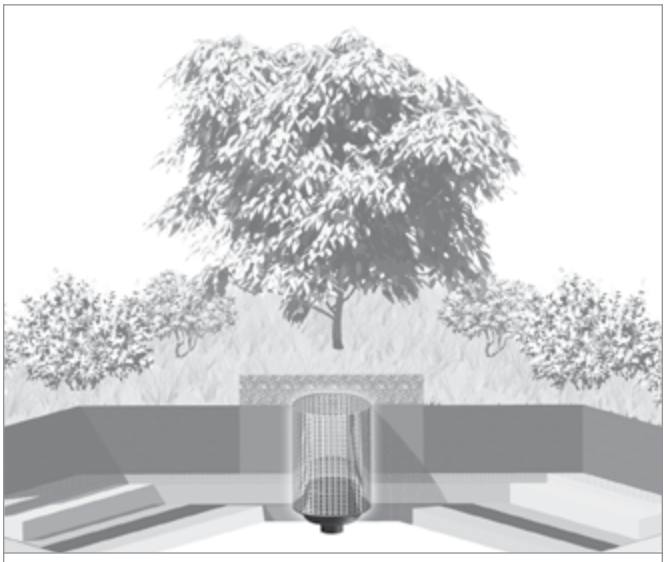

Z110 Green Roof Drain with Enclosure Height for Intensive Green Roof Systems

See pages 34-35 for ordering information.

For additional product information, please visit www.zurn.com

PRODUCT HIGHLIGHT

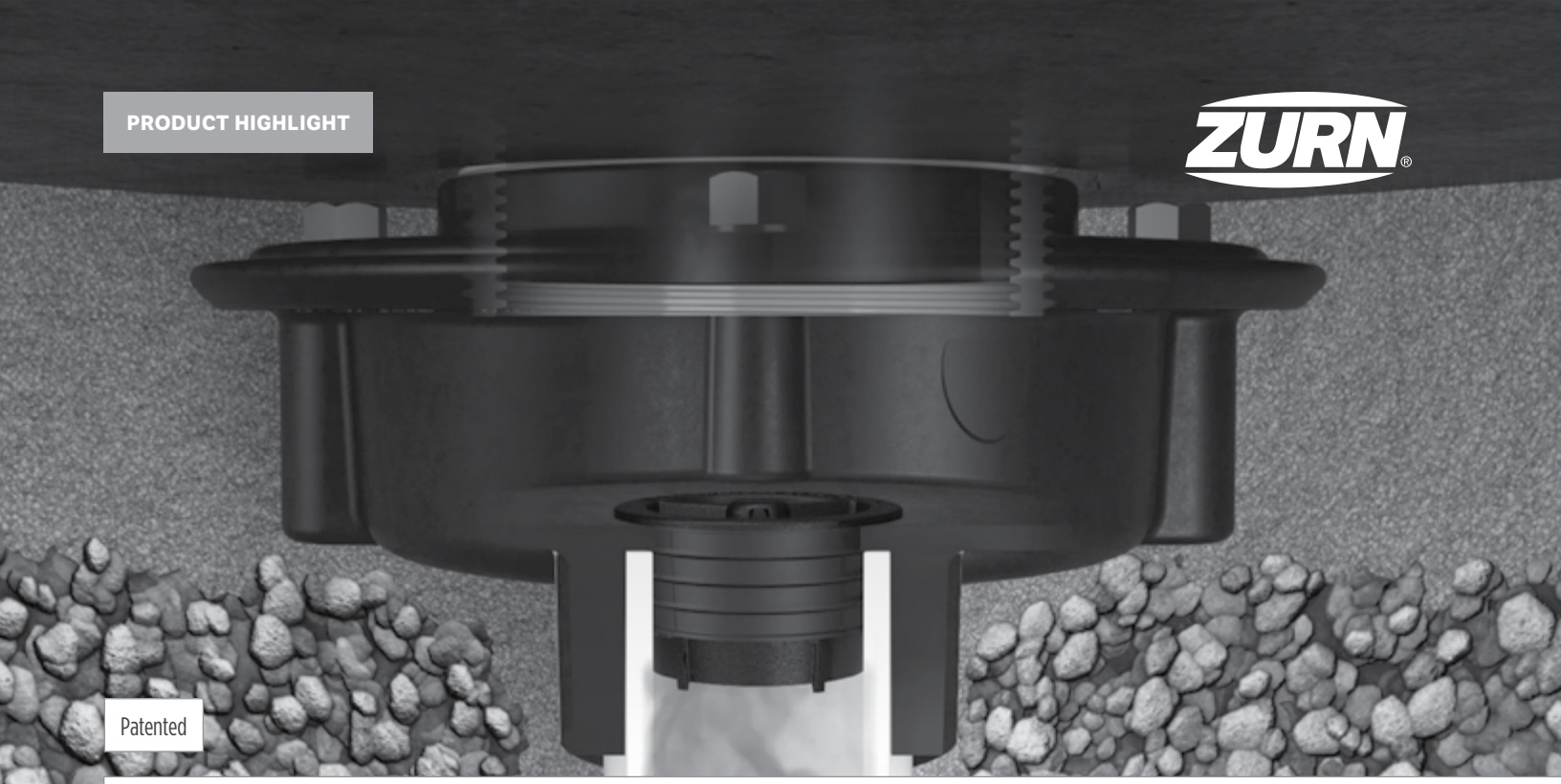

Z1072 – ZSHIELD™ FLOOR DRAIN BARRIER TRAP SEAL

Discover the paired performance of the ZShield and EZ1™ Technology

Z1072 ZShield Barrier Trap Seal
Available in 2", 3", 3-1/2", 4"

The leading drain manufacturer now offers the easiest to install barrier trap, the ZShield minimizes evaporation, preventing odors, gases, and insects from entering up through the drain.

Features and Benefits

- Universally designed to easily be installed in almost any floor drain
- Designed for new construction and retrofit applications
- ASSE, ICC and IAPMO Approved

Engineering Specification

ZURN Z1072 Barrier trap seal device for use with floor drains to minimize trap evaporation. Product is comprised of an ABS rigid structure, silcone gasket and seal for 2" [51 mm], 3" [76 mm], 3-1/2" [89 mm], and 4" [102 mm] sizes. Device is engineered to comply with the performance requirements of ASSE 1072 standard and is third party listed with IAPMO (cUPC) and ICC (ICC cES PMG).

ZShield Approvals

ASSE® Listed 1072-2007, ICC, and IAPMO® Listed

See 157 for ordering information.

Complete System Saving Time and Money

Zurn Commercial Drainage takes pride in our effort to always bring the contractor new products that save time and allow for job site flexibility. Pairing the new ZShield for either new construction or retrofit application, allows for easy installation utilizing the neoprene gasket for a secure fit.

A Name You Can Trust

From the contractor to the building owner, Zurn has always provided products that provide a safe and effective solution. Pair your drain with a ZShield Barrier Trap for that extra security and aesthetics your building requires.

Z415-BZ1

Z415

Z508

EZ

Z505

Z610

PRODUCT HIGHLIGHT

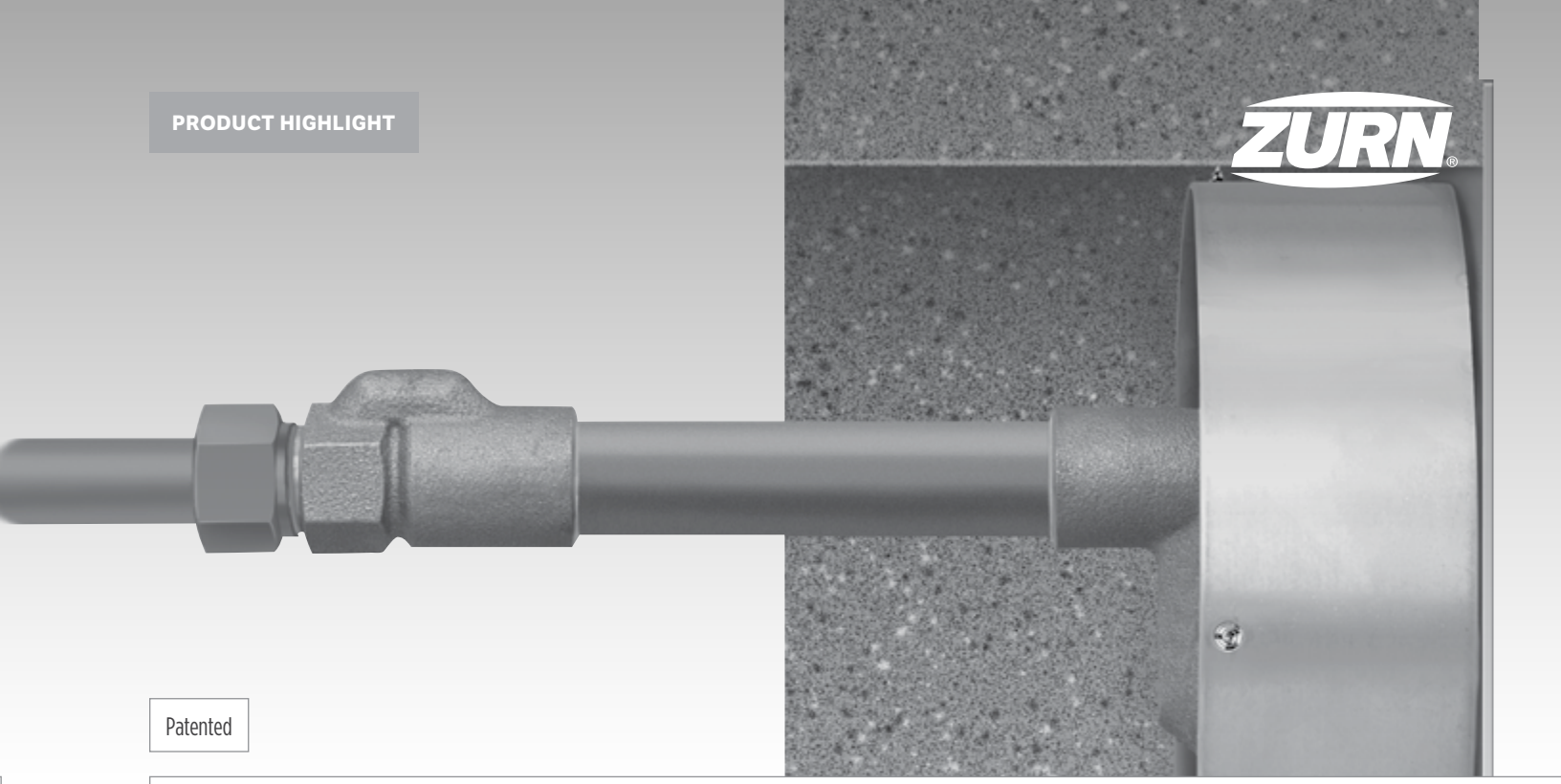

Patented

A PERFECT FIT: Z1322XL-EZ AND Z1332XL-EZ ECOLOTROL™ WALL HYDRANTS

For Installation in Tilt-Up Construction

The 7-7/8″ diameter sleeve of the Zurn Z1322-EZ and Z1332-EZ Ecolotrol wall hydrants is designed exclusively for tilt-up installations. They have many benefits over square or rectangular hole type installations, including:

- Coring an 6″ diameter hole in the wall results in time and labor savings over trying to hammer drill a square or rectangular hole
- Coring makes a smooth and clean cut opening without damaging the wall or chipping the interior wall surface, whereas a square or rectangular hole can crack or damage the precast wall during hammer drilling
- Smooth interior wall surface is easy to insulate (if required)
- No materials or labor are required to repair the interior wall surface
- Round sleeves have holes that allow the installer to secure them to the wall with hardware
- Wide box face fit flush with the wall surface and covers the 6″ diameter hole
- Square box face flanges provide surface areas that seal and waterproof (if required)
- Tight, secure fit delivers vermin-proof installation

Z1322XL-EZ and Z1332XL-EZ Ecolotrol lead-free wall hydrants offer a safe, reliable solution that exceeds federal requirements.

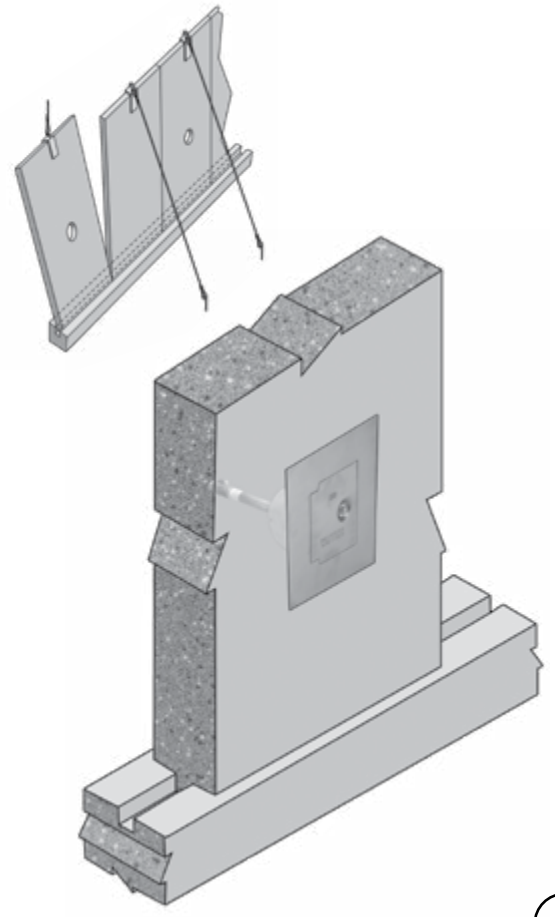

XL LEAD FREE

See pages 275, 277 for ordering information.

For additional product information, please visit www.zurn.com

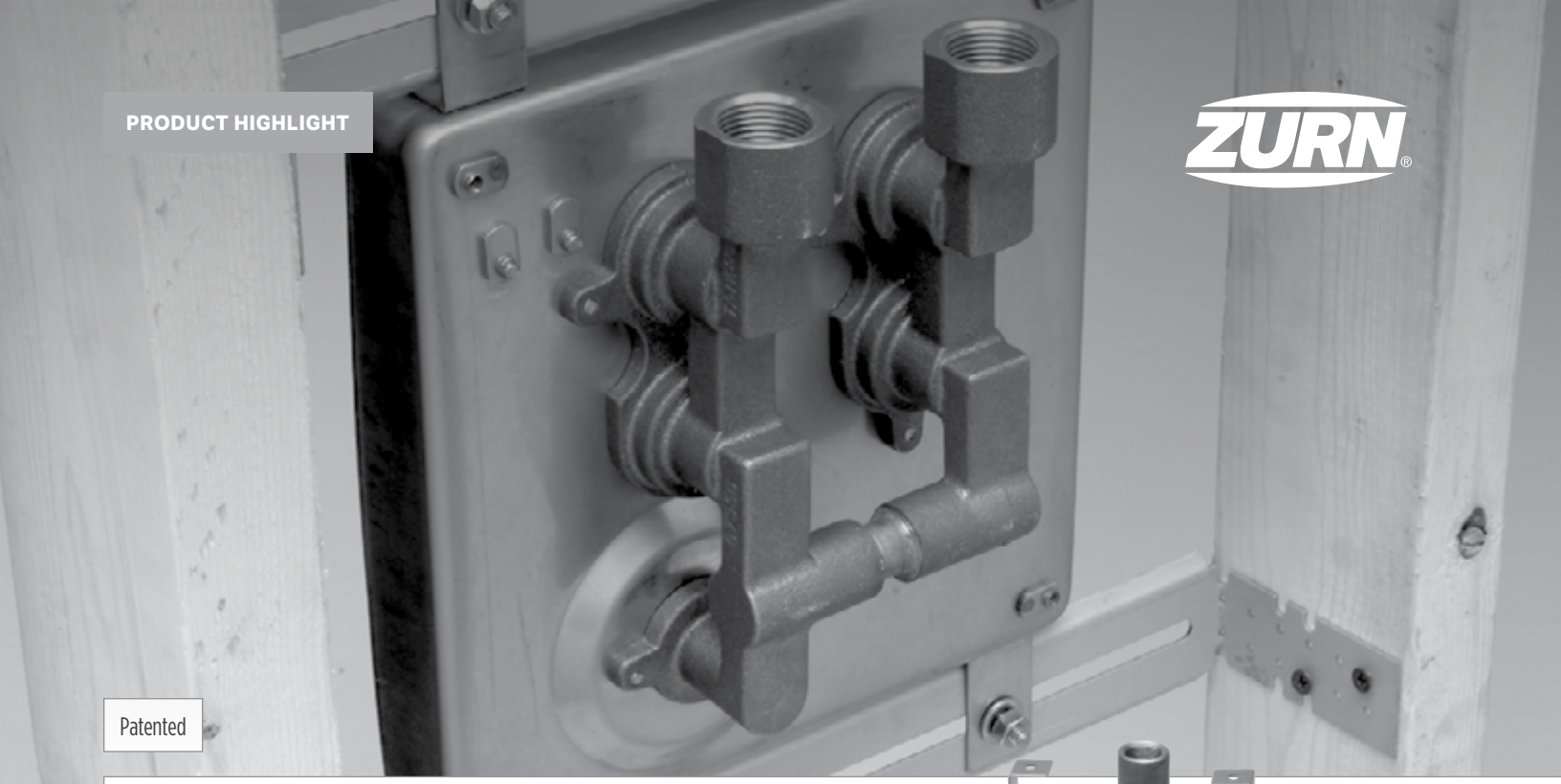

PRODUCT HIGHLIGHT

Patented

EZ HYDRANTS: Z1327-EZ, Z1350-EZ, Z1320XL-EZ

Ease of Installation Paired with Excellent Durability

Z1327-EZ and Z1350-EZ

- All fabricated stainless steel constructed boxes provide a long-lasting finish
- Mounting braces provide fast, rigid installation of the hydrant box assembly
- Hydrant box and braces are designed to fit inside a standard 2″ x 4″ stud wall on 16″ or 24″ centers
- Mounting braces allow hydrant box assembly to be easily adjusted left or right to a desired location, and locked in place prior to finished wall placement
- Mounting braces eliminate the use of additional material on a job site to form and adjust the braces to fit within the wall and accommodate the hydrant

Z1320XL-EZ

XL LEAD FREE

- All fabricated stainless steel constructed box provides a long-lasting finish
- Hydrant box is designed to fit in one standard modular brick course
- Wide flange surface hides the wall rough-in opening after installation
- Hydrant cover opens downward with a full 180° rotation
- Optional wall clamp assembly provides rigidity and helps secure hydrant box to the wall
- Lead-free hydrant provides a safe, reliable solution that exceeds federal requirements

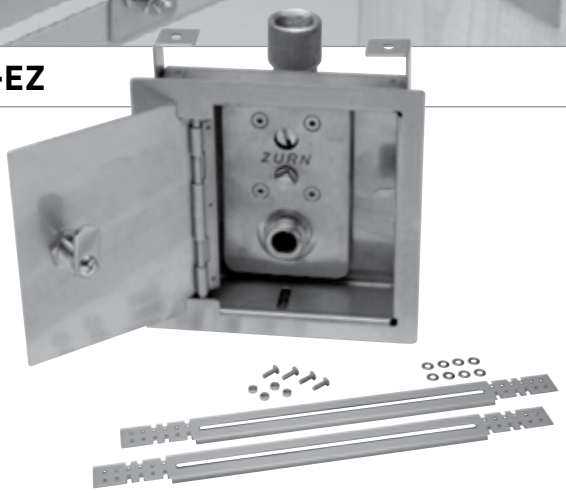

Z1350-EZ encased, moderate climate wall hydrant for narrow wall installation with mounting bracket hardware

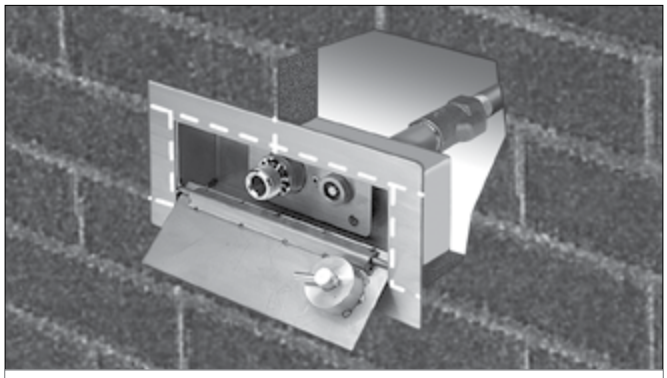

Z1320XL-EZ encased Ecolotrol™ lead-free "anti-siphon," automatic draining wall hydrant installed in one standard masonry course

See pages 273, 276, and 279 for ordering information.

This symbol denotes a product that is engineered to reduce installation and rework time.
For additional product information, please visit zurn.com/laborsavings

PRODUCT HIGHLIGHT

ZURN BARIATRIC PROVIDES SUPERIOR PERFORMANCE

Zurn Meets Health Care Challenges

Million of adults in the United States that are classified as overweight, with over half of that number being considered obese. Nine million are considered to be extremely obese or bariatric patients. Due to the increasing number of bariatric patients, there has been a spike in gastric bypasses, stomach reductions, and banding operations which has led to an increase in the amount of bariatric patients in hospitals.

In order to help meet the needs of special bariatric care, Zurn has developed both bariatric designed toilets and support carriers for hospital restrooms. With paired performance options available up to 1,000 pounds Zurn knows how support this growing concern.

Z5681
750 - 1,000 lb Elongated
Wall Hung Water Closet

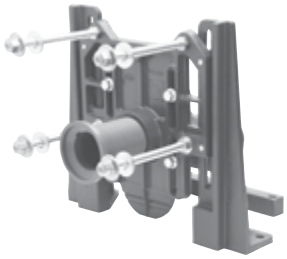

Z1201-XH and Z1202-XH
Extra Heavy Carrier Systems
Support up to 750 lb

Z5691
1,000 lb Rating Bariatric
Wall Hung Water Closet

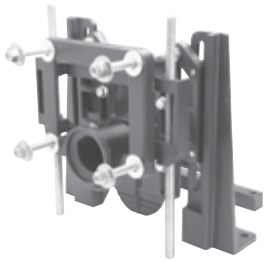

Z1201-XB and Z1202-XB
Bariatric Carrier Systems
Support up to 1000 lb

See pages 216-229 for ordering information.

ZURN BARIATRIC PROVIDES SUPERIOR PERFORMANCE

Z5681

750 - 1,000 lb Elongated Wall Hung Water Closet

- Installation of the paired carrier and closet guarantee performance and safeguard against catastrophic failure from using different manufacturer's carrier and closet
- 3-year Zurn One System warranty
- 1.6 gpf, siphon jet type flush
- Full compliance with ASME/ANSI A112.19.2 flush performance testing
- 1,000 lb load rating in accordance with ASME/ANSI A112.19.2
- Manufactured of type 304 stainless steel (optional brushed stainless steel finish) seamless construction with antimicrobial powder-coated exterior surface
- 1-1/2" top inlet spud connection
- Antimicrobial polypropylene elongated, self-centering, non-shift seat design with integral molded bumpers

Z1201-XH and Z1202-XH

Extra Heavy Carrier Systems Support up to 750 lb

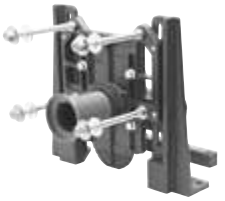

Patented

- Provides paired performance up to 750 lb behind the wall and 500 lb at the closet fixture
- Maintains additional support and a degree of safety, regardless of the restroom location
- Wall hung closet fixture provides a sanitary environment by keeping the toilet fixture off the floor
- Designed for both new and retrofit applications and maintains the use of 5/8" studs that are standard for all wall hung fixture installations
- Specify the Z1201-XH for horizontal extra heavy-duty carrier needs and the Z1202-XH for vertical extra heavy-duty carrier requirements

Z5691

1,000 lb Rating Bariatric Wall Hung Water Closet

- Installation of the paired carrier and closet guarantee performance and safeguard against catastrophic failure from using different manufacturer's carrier and closet
- 3-year Zurn One System warranty
- Full compliance with ASME/ANSI A112.19.2 flush performance testing
- 1,000 lb load rating in accordance with ASME/ANSI A112.19.2
- 1.6 gpf, siphon jet type flush
- Extra large bariatric-sized seating area for enhanced patient comfort
- Manufactured of type 304 stainless steel (optional brushed stainless steel finish) seamless construction with antimicrobial powder-coated exterior surface
- 1-1/2" top inlet spud connection
- Antimicrobial polypropylene elongated, self-centering, non-shift seat design with integral molded bumpers

Z1201-XB and Z1202-XB

Bariatric Carrier Systems Support up to 1,000 lb

Patented

- The Bariatric Room Design Advisory Board (BRDAB), created by The Hill-Rom Company, has targeted bariatric room maximum design for 1,000 lb for chairs, beds, and toilet fixtures
- Wall hung closet fixture provides a sanitary environment by keeping the toilet fixture off the floor
- Designed for new and retrofit applications and maintain the use of 5/8" studs that are standard for all wall hung fixture installations
- Integral finishing frame provided to square up the finished wall, reduce installation time, and add support
- Specify the Z1201-XB for horizontal and the Z1202-XB for vertical Bariatric Carrier requirements

See pages 216-229 for ordering information.

PRODUCT HIGHLIGHT

Z1222-CB CARRIER BANK

Designed to Speed Up Your Installation

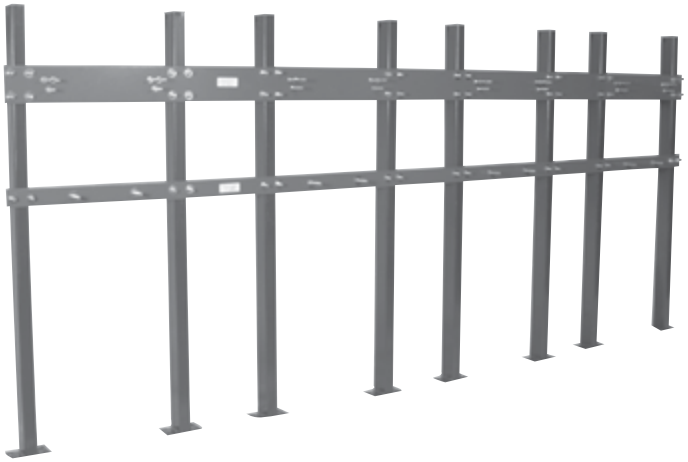

Multiple station plate system provides an extended length plate fabricated with exact center-to-center locations to accommodate a bank of multiple urinals. Custom-length plates are specific to job requirements and are provided with loose uprights and boxed mounting hardware and studs. Ideally suited for prefabricated applications.

The following information is necessary when specifying the carrier bank:

- Fixture manufacturer, model number, and quantity of fixtures
- Center-to-center spacing of urinals
- Handicap fixture quantity and location (if applicable)
- Wall thickness

Note: Custom carrier banks are available for all Zurn plate type systems.

See page 254 for ordering information.

This symbol denotes a product that is engineered to reduce installation and rework time.
For additional product information, please visit zurn.com/laborsavings

CUSTOMER GUIDE INSTRUCTIONS

Each product section in this catalog is introduced by a cover page showing a representation of products. Additional information varies by product section, but generally consists of the following:

APPLICATION INDEX	General guide to the characteristics of the products and their design.
PRODUCT COMPLIANCE	List of standards and approvals that apply.
PRODUCT DESCRIPTIONS	Each product page contains a product photograph, engineering dimensional drawing, engineering specification, pricing chart, available outlet types and sizes, and the appropriate prefix and suffix options.
TECHNICAL DATA	General overview of product characteristics, assemblies, and installation data.

TYPICAL PRODUCT PAGE NAVIGATION

Product Heading

Product Photo

Dimensional Chart

Prefix/Model # - Material/Finish/Body Type

Strainer Designation - Size/Type

Outlet - Size/Type

Engineering Line Drawing

Section Marker Tab

Suffix - Option List

Z415 BODY ASSEMBLY WITH HEEL-PROOF "TYPE B" STRAINER

ENGINEERING SPECIFICATION

ZURN ZN415B floor and shower drain, Dura-Coated cast iron body with bottom outlet, combination invertible membrane clamp and adjustable collar with seepage holes, and "TYPE B" polished nickel bronze, light-duty strainer.

NOTES

For other available strainer variations see Z400 Strainer Series. Add price for required strainer to "BODY ONLY" price in chart. Specify type and size required.

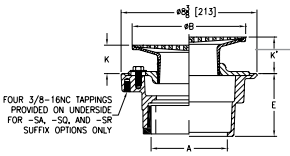

Strainer Designation	Dimensions in Inches [mm]						Str. Open Area (Sq. In. [cm²])	App. Wt. Lbs. [Kg]
	A Pipe Size	B Str. Dia.	K		K'			
			Min.	Max.	Min.	Max.		
-5B	2 [51], 3 [76]	5 [127]	1 [25]	1-1/2 [38]	1-3/32 [27]	2-1/4 [57]	6-1/4 [40]	11 [5]
-6B	2 [51], 3 [76], 4 [102]	6 [152]		1-25/32 [45]	1-13/32 [36]	2-17/32 [64]	9 [58]	13 [6]
-7B		7 [178]		2-1/8 [54]	1-23/32 [44]	2-7/8 [73]	12 [77]	14 [6]
-8B	3 [76], 4 [102]	8 [203]	1-5/32 [29]		1-3/4 [44]		19 [122]	16 [7]
	6 [152]							18 [8]
-10B		10 [254]	1-7/16 [37]	2-1/2 [64]	2 [51]	3-1/4 [83]	23 [148]	22 [10]

PREFIXES	DESCRIPTION	STRAINER DESIG.	PIPE SIZE	LIST PRICE
ZN415*	D.C.C.I. Body Assembly with Polished Nickel Bronze Top	-5B	2", 3"	363.00
		-6B	2", 3", 4"	444.00
		-7B	2", 3", 4"	511.00
		-8B	3", 4"	640.00
			6"	1,050.00
		-10B	6"	1,284.00
ZB415	D.C.C.I. Body Assembly with Polished Bronze Top	-5B	2", 3"	345.00
		-6B	2", 3", 4"	401.00
		-7B	2", 3", 4"	485.00
		-8B	3", 4"	606.00
			6"	1,016.00
		-10B	6"	1,239.00
Z415	D.C.C.I. Body Assembly ONLY (add "-L/Top" to product sku)	No Strainer	2", 3", 4"	145.00
			6"	555.00

OUTLETS (SPECIFY PIPE SIZE IN INCHES AND TYPE OF OUTLET)				
OUTLET	TYPE	PIPE SIZE/ OUTLET TYPE	E BODY HT. DIM.	ADD
IC	Inside Caulk	2IC, 3IC, 4IC	4-13/16"	N/C
IG	Inside Gasket	2IG, 3IG, 4IG	4-13/16"	N/C
IP	Threaded	2IP	2-7/16"	59.00
		3IP	2-3/4"	59.00
		4IP	2-13/16"	59.00
		6IP	2-7/8"	59.00
NH	No-Hub	2NH, 3NH, 4NH	3-13/16"	N/C
NL	Neo-Loc	2NL, 3NL, 4NL	3-7/8"	N/C

SUFFIXES			ADD
-AA	All Acid Resisting Epoxy		196.00
-AR	Acid Resisting Epoxy Coated Cast Iron		127.00
-C	Clamp Collar for -90 Side Outlet		112.00
-CP	Chrome-Plated Bronze Top		19.00
-DP	Decorative Polished Top		127.00
-EF	3/8" Extension Frame		223.00
-G	Galvanized Cast Iron		148.00
-HD	Heavy-Duty Slotted Grate (ZN 5" and 6" sizes only)		154.00
-OF	Oval Funnel - 6" thru 10" Strainers Only (See Z329-7)	ZB	273.00
		ZN	316.00
-P	Trap Primer Connection (Specify 1/2" or 3/4")		N/C
-PC	Protective Cover		47.00
-SA	Stabilizer Assembly (See Z1035)		–
-SQ	Stabilizer Q-deck (See Z1035-Q)		–
-SR	Stabilizer Ring (See Z400-SR)		–
-TC	Neo-Loc Test Cap Gasket (2" thru 4" NL Bottom Outlet Only)		17.00
-U	1"-3" High Extension Adapter (See Z400-U)	D.C.	104.00
		Galv.	229.00
	For each additional 1" above 3"		73.00
-V	Backwater Valve (Not Available with -Y)		285.00
-VP	Vandal-Proof Secured Top		42.00
-W	Winter Closure Plug		273.00
-Y	Sediment Bucket (Not Available with -V)		81.00
-4	4" Diameter Funnel	Z	133.00
		ZB	273.00
		ZN	316.00
-18	Leveling Ring (See Z400-18)		–
-90	90° Threaded Side Outlet Body (2" and 3" Only)		164.00

*Regularly furnished unless otherwise specified.

This symbol denotes a product that is engineered to reduce installation and rework time.

For Additional Product Information, Please Visit www.zurn.com

91

ABBREVIATIONS USED IN THIS CUSTOMER GUIDE

A.B.S.	Acronitrile Butadiene Styrene
APP.	Approximate
APPROX.	Approximate
A.R.C.	Acid Resisting Epoxy
A.R.E.	Acid Resisting Enamel
AUX.	Auxiliary
BRZ.	Bronze
C.I.	Cast Iron
C.O.	Cleanout
CONN.	Connection
D.C.	Dura-Coated
DIA.	Diameter
DIM.	Dimension
DT	Decorative Top
D.C.C.I.	Dura-Coated Cast Iron
EXT.	Extension
GALV.	Galvanized
GSKT.	Gasket
G.P.M.	Gallons Per Minute
HT.	Height
IN.	Inch
LB	Pounds
LG.	Long
MED.	Medium
N.A.	Not Applicable
N.B.	Nickel Bronze
N/C	No Charge
P.B.	Polished Bronze
PLN.	Plain
POA	Price on Application
POL.	Polished
P.V.C.	Polyvinylchloride
RAD.	Radius
SGL.	Single
SQ. IN.	Square Inches
S.S.	Stainless Steel
STL. ST.	Stainless Steel
STR.	Strainer
THD.	Threaded
V.P.	Vandal-Proof
W/	With
WT.	Weight
XH	Extra Heavy

NOTE: Items designated as Best Sellers are most specified and are generally in stock for shipment. Items contained in the legacy configuration addendum are still available to support legacy specification but may be subject to longer lead-times. Call factory for availability or suggested substitution of a recommended best seller.

NOTES

SD1018

ROOF DRAINS

ROOF DRAIN - PRODUCT COMPLIANCE 26

ROOF DRAIN - GENERAL INFORMATION 26

ROOF DRAIN - APPLICATION INDEX 26

Z100 15" DIAMETER MAIN ROOF DRAIN WITH LOW SILHOUETTE DOME 27

Z101 HIGH CAPACITY 20" DIAMETER MAIN ROOF DRAIN WITH LOW SILHOUETTE DOME 28

Z103 15" DIAMETER DEEP SUMP DUAL OUTLET ROOF DRAIN WITH LOW SILHOUETTE DOME 28

Z103-45 45° 15" DIAMETER DEEP SUMP DUAL OUTLET ROOF DRAIN WITH LOW SILHOUETTE DOME 29

Z104 15" DIAMETER DEEP SUMP ROOF DRAIN WITH LOW SILHOUETTE DOME 30

Z105 CONTROL-FLO™ ROOF DRAIN WITH PARABOLIC WEIR 31

Z107 20" WIDE DECK FLANGE ROOF DRAIN 32

Z108 15" DIAMETER DECK RECEPTOR DRAIN 33

Z110 15" GREEN ROOF DRAIN WITH PERFORATED SCREEN ASSEMBLY, AND REMOVABLE COVER WITH LIFT HANDLE 34

Z110-AI GREEN ROOF DRAIN WITH PERFORATED SCREEN ASSEMBLY, REMOVABLE COVER WITH LIFT HANDLE, AND AUXILIARY INLET 35

Z111 12" DIAMETER FLAT DECK ROOF DRAIN FOR METAL DECKS 36

Z121 12" DIAMETER ROOF DRAIN LOW SILHOUETTE DOME 37

Z122 12" DIAMETER DECK RECEPTOR DRAIN 38

Z125 8-3/8" DIAMETER ROOF DRAIN LOW SILHOUETTE DOME 39

Z127 8-1/2" DIAMETER DECK RECEPTOR DRAIN 40

Z130 14-9/32" DIAMETER SIPHONIC MAIN ROOF DRAIN 41

Z131 14-9/32" DIAMETER SIPHONIC OVERFLOW ROOF DRAIN 41

Z150 14" SQUARE TOP PROM-DECK DRAIN WITH HEEL-PROOF GRATE AND ROTATABLE FRAME 42

Z154 12" SQUARE TOP PROM-DECK DRAIN WITH HEEL-PROOF GRATE AND ROTATABLE FRAME 43

Z158 10" SQUARE TOP PROM-DECK DRAIN WITH HEEL-PROOF GRATE AND ROTATABLE FRAME 44

Z160 135° SCUPPER DRAIN 45

Z161 3" X 10" OBLIQUE SCUPPER DRAIN 45

Z163 15" DIAMETER COMBINATION MAIN ROOF AND OVERFLOW DRAIN WITH LOW SILHOUETTE DOMES AND DOUBLE TOP-SET® DECK PLATE 46

Z164 12" DIAMETER COMBINATION MAIN ROOF AND OVERFLOW DRAIN WITH LOW SILHOUETTE DOMES AND DOUBLE TOP-SET® DECK PLATE 47

Z165 8-3/8" DIAMETER COMBINATION MAIN ROOF AND OVERFLOW DRAIN WITH LOW SILHOUETTE DOMES AND DOUBLE TOP-SET® DECK PLATE 48

Z180 4-1/2" DIAMETER CORNICE DRAIN WITH BOTTOM OUTLET 48

Z181 6" DIAMETER CORNICE DRAIN WITH BOTTOM OUTLET 49

Z182 4-1/2" DIAMETER CORNICE DRAIN WITH 90° OUTLET 49

Z185 6" DIAMETER CORNICE DRAIN WITH 90° OUTLET 50

Z187 6" X 7" OR 8" X 12" OBLIQUE SCUPPER DRAIN 50

Z189 5" X 6" X 11" SCUPPER DRAIN 51

Z190 VERTICAL EXPANSION JOINT 51

Z191 5" X 4" X 24" DOWNSPOUT BOOT 52

Z191-RD 4" X 18" DOWNSPOUT BOOT 52

Z192 4" X 3" DOWNSPOUT BOOT 53

Z193 VANDAL-PROOF HOODED VENT CAP 53

Z195 VENT STACK FLASHING SLEEVE 54

Z196 VENT STACK FLASHING SLEEVE 54

Z197 RISER SLEEVE 55

Z198 PARAPET SCUPPER SLEEVE 55

Z199 DOWNSPOUT NOZZLE 56

Z199-DC DOWNSPOUT COVER 57

ROOF DRAIN - PRODUCT COMPLIANCE

Zurn roof drains are constructed of high quality materials and, in general, are designed to meet the requirements of ASME Standard A112.6.4 (revision and redesignation of ANSI A112.21.2M).

For verification of a selected roof drain, contact your local Zurn Sales Representative.

ROOF DRAIN - GENERAL INFORMATION

Zurn roof drains are comprised of three basic components: a body (sump), a combination membrane flashing clamp/gravel guard, and a dome strainer. Two of Zurn's roof drains are the Z100-DE and Z100-DR, shown below. These illustrate the basic components and options: the adjustable extension -DE (Deck Extension), -DR (Drain Riser), and Top-Set Roof Deck Plate (-DP).

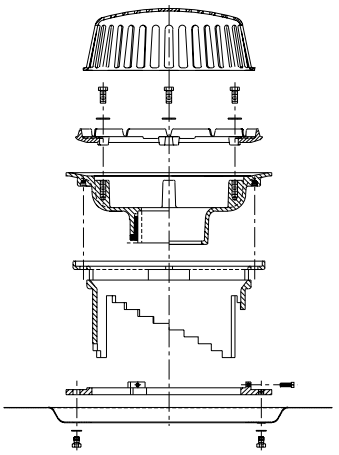

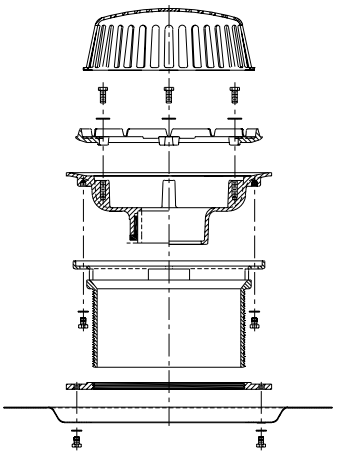

Note: Neo-Loc outlets are not recommended for roof drain applications due to the watertight integrity of the Neo-Loc connection to the leader pipe being dependent upon adequate leader pipe support and accurate perpendicularity of leader pipe into Neo-Loc gasket.

ROOF DRAIN - APPLICATION INDEX

Roof drain selection should be made with a specific type of roof construction in mind. The many types and sizes of drains offered by Zurn, coupled with a wide array of available options, provide you with a roof drain for all applications.

APPLICATION	RECOMMENDED ROOF DRAIN
Main Roof	Z100, Z100-90, Z104, Z105, Z107, Z108
High Capacity	Z101
Water Insulated Main Roof	Z100-AW, Z100-W, Z100-89
Combination Main/Overflow Drain	Z103, Z103-45
Green Roof	Z110, Z110-AI
Medium Area	Z111, Z121, Z121-90, Z122
Inverted Membrane Roof Deck	Z100-85, Z121-85, Z125-85
Overflow	Z108, Z122, Z127, Z163, Z164, Z165
Penthouse and Small Area	Z125, Z125-90, Z127
Promenade and Patio	Z150, Z154, Z158
Parapet Scupper	Z160, Z161, Z187, Z189
Canopy and Terrace	Z180, Z181, Z182, Z185
Expansion Joints	Z190
Downspout Boot	Z191, Z191-RD, Z192
Vent Cap	Z193
Flashing Sleeves and Scupper Sleeves	Z195, Z196, Z197, Z198
Downspout Nozzle	Z199, Z199-DC

For additional product information, please visit www.zurn.com.

Z100 15″ DIAMETER MAIN ROOF DRAIN WITH LOW SILHOUETTE DOME

ENGINEERING SPECIFICATION

Zurn Z100 15″ diameter roof drain features Dura-Coated cast iron body with combination membrane flashing clamp/gravel guard and low silhouette polydome.

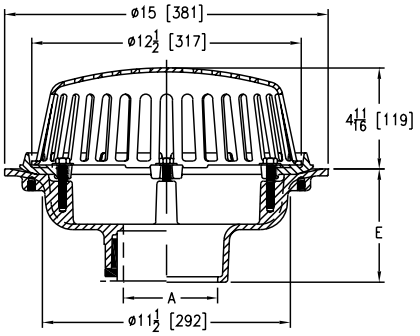

A Pipe Size inches [mm]	Dome Open Area sq in [cm²]	Approximate Weight lb [kg]
2 [51], 3 [76], 4 [102]	103 [665]	26 [12]
6 [152]		27 [12]
8 [203]		28 [13]

PREFIXES	DESCRIPTION	PIPE SIZE	LIST PRICE
Z100*	D.C.C.I. Body with Polydome	2″, 3″, 4″	704.00
		6″	1,009.00
		8″	1,313.00
ZA100	D.C.C.I. Body with Aluminum Dome	2″, 3″, 4″	951.00
		6″	1,257.00
		8″	1,559.00
ZC100	D.C.C.I. Body with Cast Iron Dome	2″, 3″, 4″	913.00
		6″	1,218.00
		8″	1,522.00
ZRB100	D.C.C.I. Body with Plain Bronze Dome	2″, 3″, 4″	1,525.00
		6″	1,830.00
		8″	2,133.00

OUTLETS (SPECIFY PIPE SIZE IN INCHES AND TYPE OF OUTLET)

OUTLET	TYPE	OUTLET DESIGNATION (PIPE SIZE/OUTLET TYPE)	E BODY HT. DIM.	ADD
IC	Inside Caulk	3IC, 4IC, 6IC	5-1/4″	N/C
IP	Threaded	2IP, 3IP, 4IP, 6IP, 8IP	3-3/4″	80.00
NH	No-Hub	2NH, 3NH, 4NH, 6NH, 8NH	5-1/4″	N/C
NL	Neo-Loc (not recommended for roof drains)	2NL, 3NL, 4NL	4-9/16″	N/C
		6NL	5-7/16″	N/C

BEST SELLERS	LIST PRICE
Z100-3NH	704.00
Z100-3NH-DP	1,140.00
ZC100-3NH-DP	1,349.00
ZC100-3NH-89-DP	1,582.00
Z100-4NH	704.00
Z100-4NH-DP	1,140.00
Z100-4NH-89-DP	1,373.00
ZA100-4NH-DP	1,387.00
ZA100-4NH-DP-EA	2,111.00
ZC100-4NH	913.00
ZC100-4NH-DP	1,349.00
ZC100-4NH-89	1,146.00
ZC100-4NH-89-DP	1,582.00
ZC100-4NH-DP-EA	2,073.00
Z100-6NH	1,009.00
Z100-6NH-DP	1,445.00
ZC100-6NH	1,218.00
ZC100-6NH-DP	1,654.00
ZC100-6NH-89-DP	1,887.00
ZC100-6NH-DP-EA	2,378.00

SUFFIXES			ADD
–AC	Angular Underdeck Clamp		489.00
–AR	Acid Resistant Epoxy Coated Finish		1,355.00
–AW	3/4″ to 4″ Adjustable Water Level Regulator (ZC Only)		883.00
	For Each Additional 1″ above 4″ (Specify Height)		244.00
–C	Underdeck Clamp		244.00
◷ –DE	Deck Extension (Includes Deck Plate -DP)	D.C.C.I.	966.00
		Galv.	1,461.00
◷ –DP	Top-Set® Roof Deck Plate (Replaces both -C and -R)		436.00
◷ –DR	Top-Set Adjustable Drain Riser Extension Assembly	D.C.C.I.	1,215.00
		Galv.	1,556.00
–E	Static Extension 1″ thru 4″ (Specify Height)	D.C.C.I.	660.00
		Galv.	995.00
	For E Extensions Greater than 4″ - Per Inch (Specify Height)	D.C.C.I.	158.00
		Galv.	242.00
–EA	Adjustable Extension Assembly 2-1/8″ thru 3-1/2″	D.C.C.I.	724.00
		Galv.	1,073.00
◷ –EB	Top-Set Adjustable Extension Assembly		660.00
–FG	Flush Grate (Replaces Dome Strainer)		687.00
–G	Galvanized Cast Iron	Z100	957.00
		ZC100	1,360.00
–HD	6-3/4″ High Aluminum Dome Strainer - 148 sq. in. open area (ZA Only)		248.00
–R	Roof Sump Receiver		272.00
–SC	Secondary Clamp Collar		185.00
–SS	Stainless Steel Mesh Screen Over Dome		502.00
–ST	Dome with Solid Top (ZA and ZC Only)		502.00
◷ –TC	Neo-Loc Test Cap Gasket (2″, 3″, 4″ NL Bottom Outlet Only)		24.00
–VP	Vandal-Proof Secured Top		125.00
–W2	2″ Internal Water Dam		420.00
–W3	3″ Internal Water Dam		420.00
–W4	4″ Internal Water Dam		420.00
–84	Stainless Steel Perforated Gravel Guard 1″ thru 4″		784.00
	For Each Additional 1″ above 4″ - Per Inch (Specify Height)		79.00
–85	Stainless Steel Perforated Extension 1″ thru 4″		774.00
	For Each Additional 1″ above 4″ - Per Inch (Specify Height)		79.00
–89	2″ High External Water Dam		233.00
–90	90° Threaded Side Outlet Body (2″, 3″, 4″, 6″)		368.00

**Regularly furnished unless otherwise specified.*

Items designated as Best Sellers are most specified and are generally in stock for shipment.

◷ This symbol denotes a product that is engineered to reduce installation and rework time.

For additional product information, please visit www.zurn.com.

Z101 HIGH CAPACITY 20″ DIAMETER MAIN ROOF DRAIN WITH LOW SILHOUETTE DOME

ENGINEERING SPECIFICATION

Zurn Z101 20″ diameter roof drain features Dura-Coated cast iron body with combination membrane flashing clamp/gravel guard and low silhouette cast iron dome.

A Pipe Size inches [mm]	Dome Open Area sq in [cm²]	Approximate Weight lb [kg]
8 [203]	216 [1394]	77 [35]
10 [254]		78 [35]
12 [305]		79 [36]

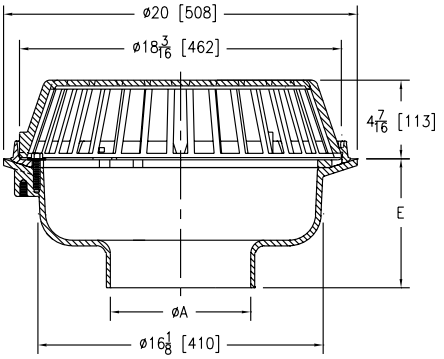

BEST SELLERS	LIST PRICE
Z101-8NH	1,878.00
Z101-8NH-89	2,556.00
Z101-10NH	2,073.00

PREFIXES	DESCRIPTION	PIPE SIZE	LIST PRICE
Z101*	D.C.C.I. Body with Cast Iron Dome	8″	1,878.00
		10″	2,073.00
		12″	2,221.00

OUTLETS (SPECIFY PIPE SIZE IN INCHES AND TYPE OF OUTLET)				
OUTLET TYPE		OUTLET DESIGNATION (PIPE SIZE/OUTLET TYPE)	E BODY HT. DIM.	ADD
NH	No-Hub	8NH, 10NH, 12NH	7-5/16″	N/C

SUFFIXES			ADD
–AR	Acid Resistant Epoxy Coated Finish		1,868.00
–C	Under Deck Clamp		168.00
◷ –DP	Top Set® Roof Deck Plate (Replaces both -C and -R)		767.00
–E	Static Extension 1″ thru 4″ (Specify Height)	D.C.C.I.	990.00
		Galv.	1,496.00
	For E Extensions Greater than 4″ - Per Inch (Specify Height)	D.C.C.I.	211.00
		Galv.	324.00
◷ –EB	Top-Set Adjustable Extension Assembly		899.00
–G	Galvanized Cast Iron		1,423.00
–R	Roof Sump Reciever		272.00
–W2	2″ Internal Water Dam		1,069.00
–W3	3″ Internal Water Dam		1,069.00
–W4	4″ Internal Water Dam		1,069.00
–89	2″ High External Water Dam		678.00

BEST SELLERS	LIST PRICE
Z101-10NH-DP	2,840.00
Z101-10NH-89-DP	3,518.00
Z101-12NH	2,221.00
Z101-12NH-W2	3,290.00

◷ Z103 15″ DIAMETER DEEP SUMP DUAL OUTLET ROOF DRAIN WITH LOW SILHOUETTE DOME

ENGINEERING SPECIFICATION

Zurn Z103 15″ diameter dual outlet roof drain with 90° primary outlet connection features Dura-Coated cast iron deep sump body with combination membrane flashing clamp/gravel guard, overflow pipe (3″, 4″, and 6″), and low silhouette cast iron dome.

A Pipe Size inches [mm]	B inches [mm]	Dome Open Area sq in [cm²]	Approximate Weight lb [kg]
3 [76]	5-9/16 [141]	103 [665]	60 [27]
4 [102]	5-1/16 [129]		
6 [152]	4 [102]		

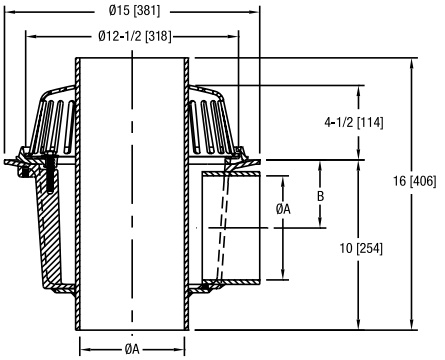

PREFIXES	DESCRIPTION	PIPE SIZE	LIST PRICE
Z103*	D.C.C.I. Body with Cast Iron Dome	3″	2,900.00
		4″	3,331.00
		6″	3,502.00

OUTLETS (SPECIFY PIPE SIZE IN INCHES AND TYPE OF OUTLET)			
OUTLET TYPE		OUTLET DESIGNATION (PIPE SIZE/OUTLET TYPE)	ADD
NH	No-Hub	3NH, 4NH, 6NH	N/C

SUFFIXES			ADD
–AR	Acid Resistant Epoxy Coated Finish		1,355.00
–C	Underdeck Clamp		244.00
◷ –DP	Top-Set® Roof Deck Plate (Replaces -C)		436.00
–DU	Cast Iron Dome on Overflow Pipe	3″ and 4″	1,202.00
		6″	1,832.00
–E	Static Extension 1″ thru 4″ (Specify Height)	D.C.C.I.	660.00
		Galv.	995.00
–G	Galvanized Cast Iron		957.00
–MS	Perforated Screen on Overflow Pipe		373.00
–SS	Stainless Steel Mesh Screen Over Dome		502.00
–VP	Vandal-Proof Secured Top		125.00
–2OF	2″ High Overflow Pipe		N/C
–45	45° Primary Outlet Connection (See Z103-45)		–
–84	Stainless Steel Perforated Gravel Guard 1″ thru 4″		784.00
	For Each Additional 1″ above 4″ - Per Inch (Specify Height)		79.00

BEST SELLERS	LIST PRICE
Z103-4NH-4	3,331.00
Z103-4NH-4-DP-DU	4,969.00
Z103-6NH-6-DP	3,938.00
Z103-6NH-6-DP-DU-VP	5,895.00

For additional product information, please visit www.zurn.com.

**Regularly furnished unless otherwise specified.*

Items designated as Best Sellers are most specified and are generally in stock for shipment.

◷ This symbol denotes a product that is engineered to reduce installation and rework time.

Z103-45 45° 15″ DIAMETER DEEP SUMP DUAL OUTLET ROOF DRAIN WITH LOW SILHOUETTE DOME

ENGINEERING SPECIFICATION

Zurn Z103-45 15″ diameter dual outlet roof drain with 45° primary outlet connection features Dura-Coated cast iron deep sump body with combination membrane flashing clamp/gravel guard, overflow pipe (3″, 4″, and 6″), and low silhouette cast iron dome.

A Pipe Size inches [mm]	B inches [mm]	Dome Open Area sq in [cm²]	Approximate Weight lb [kg]
3 [76]	9-7/16 [240]	103 [665]	60 [27]
4 [102]	10-1/4 [260]		
6 [152]	10-15/16 [278]		

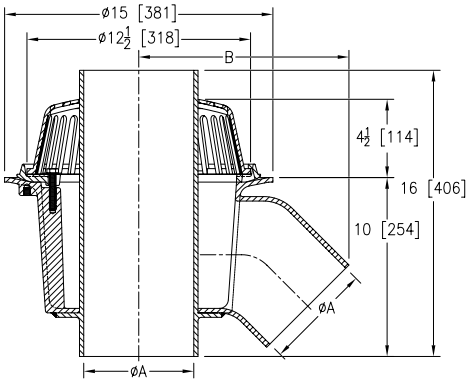

PREFIXES	DESCRIPTION	PIPE SIZE	LIST PRICE
Z103–45*	D.C.C.I. Body with Cast Iron Dome	3″	2,900.00
		4″	3,331.00
		6″	3,502.00

OUTLETS (SPECIFY PIPE SIZE IN INCHES AND TYPE OF OUTLET)			
OUTLET TYPE		OUTLET DESIGNATION (PIPE SIZE/OUTLET TYPE)	ADD
NH	No-Hub	3NH, 4NH, 6NH	N/C

SUFFIXES			ADD
–AR	Acid Resistant Epoxy Coated Finish		1,355.00
–C	Underdeck Clamp		244.00
–DP	Top-Set® Roof Deck Plate (Replaces -C)		436.00
–DU	Cast Iron Dome on Overflow Pipe	3″ and 4″	1,202.00
		6″	1,832.00
–E	Static Extension 1″ thru 4″ (Specify Height)	D.C.C.I.	660.00
		Galv.	995.00
–G	Galvanized Cast Iron		957.00
–MS	Perforated Screen on Overflow Pipe		373.00
–SS	Stainless Steel Mesh Screen Over Dome		502.00
–VP	Vandal-Proof Secured Top		125.00
–2OF	2″ High Overflow Pipe		N/C
–84	Stainless Steel Perforated Gravel Guard 1″ thru 4″		784.00
	For Each Additional 1″ above 4″ - Per Inch (Specify Height)		79.00

BEST SELLERS	LIST PRICE
Z103-3NH-3-45-DP	3,336.00
Z103-3NH-3-45-DP-MS	3,709.00
Z103-45-3NH-3	2,900.00
Z103-45-4NH-4	3,331.00
Z103-45-6NH-6-20F-DP	3,938.00
Z103-4NH-4-45	3,331.00
Z103-4NH-4-45-C	3,575.00
Z103-4NH-4-45-C-DU	4,777.00
Z103-4NH-4-45-DP	3,767.00
Z103-4NH-4-45-DP-E1	4,427.00
Z103-6NH-6-2OF-45-DP	3,938.00
Z103-6NH-6-45	3,502.00
Z103-6NH-6-45-C-DU	5,578.00
Z103-6NH-6-45-C-E2	4,406.00
Z103-6NH-6-45-DP	3,938.00

**Regularly furnished unless otherwise specified.*

Items designated as Best Sellers are most specified and are generally in stock for shipment.

This symbol denotes a product that is engineered to reduce installation and rework time.

For additional product information, please visit www.zurn.com.

Z104 15″ DIAMETER DEEP SUMP ROOF DRAIN WITH LOW SILHOUETTE DOME

ENGINEERING SPECIFICATION

Zurn Z104 15″ diameter roof drain features Dura-Coated cast iron deep sump body with combination membrane flashing clamp/gravel guard and low silhouette polydome.

A Pipe Size inches [mm]	Dome Open Area sq in [cm²]	Approximate Weight lb [kg]
3 [76], 4 [102]	103 [665]	46 [21]
6 [152], 8 [203]		

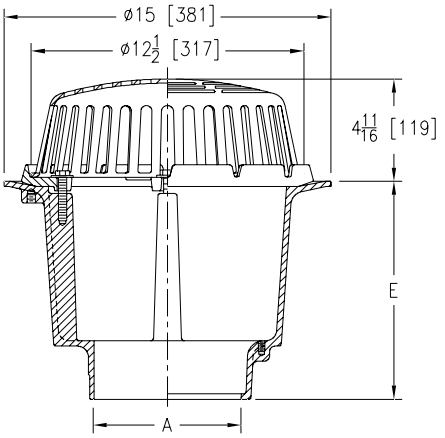

PREFIXES	DESCRIPTION	PIPE SIZE	LIST PRICE
Z104*	D.C.C.I. Body with Polydome	3″, 4″	2,232.00
		6″, 8″	2,561.00
ZA104	D.C.C.I. Body with Aluminum Dome	3″, 4″	2,492.00
		6″, 8″	2,831.00
ZC104	D.C.C.I. Body with Cast Iron Dome	3″, 4″	2,450.00
		6″, 8″	2,790.00

OUTLETS (SPECIFY PIPE SIZE IN INCHES AND TYPE OF OUTLET)

OUTLET	TYPE	OUTLET DESIGNATION (PIPE SIZE/OUTLET TYPE)	E BODY HT. DIM.	ADD
NH	No-Hub	3NH, 4NH, 6NH, 8NH	10″	N/C
NL	Neo-Loc (not recommended for roof drains)	3NL, 4NL	9-5/16″	N/C

SUFFIXES			ADD
–AC	Angular Underdeck Clamp		489.00
–AR	Acid Resistant Epoxy Coated Finish		1,355.00
–AW	Adjustable Water Level Regulator 3/4″ thru 4″ (ZC Only)		883.00
	For Each Additional 1″ above 4″ - Per Inch (Specify Height)		242.00
–C	Underdeck Clamp		244.00
–DX	Dex-O-Tex Flange		1,314.00
–E	Static Extension 1″ thru 4″ (Specify Height)	D.C.C.I.	660.00
		Galv.	995.00
	For E Extensions Greater than 4″ - Per Inch (Specify Height)	D.C.C.I.	158.00
		Galv.	242.00
–EA	Adjustable Extension Assembly 2-1/8″ thru 3-1/2″	D.C.C.I.	704.00
		Galv.	1,045.00
–FG	Flush Grate (Replaces Dome Strainer)		687.00
–G	Galvanized Cast Iron	Z	1,351.00
		ZC	1,754.00
–HD	6-3/4″ High Aluminum Dome Strainer, 148 sq. in. open area (ZA Only)		248.00
–R	Roof Sump Receiver		272.00
–SC	Secondary Clamping Collar		185.00
–SS	Stainless Steel Mesh Screen Over Dome		502.00
–VP	Vandal-Proof Secured Top		125.00
–W2	2″ Internal Water Dam		420.00
–W3	3″ Internal Water Dam		420.00
–W4	4″ Internal Water Dam		420.00
–84	Stainless Steel Perforated Gravel Guard 1″ thru 4″		784.00
	For Each Additional 1″ above 4″ - Per Inch (Specify Height)		79.00
–85	Stainless Steel Perforated Extension 1″ thru 4″		784.00
	For Each Additional 1″ above 4″ - Per Inch (Specify Height)		79.00
–89	2″ High External Water Dam		233.00

For additional product information, please visit www.zurn.com.

**Regularly furnished unless otherwise specified.*

Items designated as Best Sellers are most specified and are generally in stock for shipment.

This symbol denotes a product that is engineered to reduce installation and rework time.

Z105 CONTROL-FLO™ ROOF DRAIN WITH PARABOLIC WEIR

ENGINEERING SPECIFICATION

Zurn Z105 15″ diameter Control-Flo roof drain for dead-level roof construction features Dura-Coated cast iron body. Control-Flo weir shall be linear functioning with integral membrane flashing clamp/gravel guard and polydome. All data shall be verified proportional to flow rates. Each notch will allow 10 GPM flow per inch of rain water buildup above the drain.

A Pipe Size inches [mm]	Dome Open Area sq in [cm²]	Approximate Weight lb [kg]
2 [51], 3 [76], 4 [102]	103 [665]	34 [15]

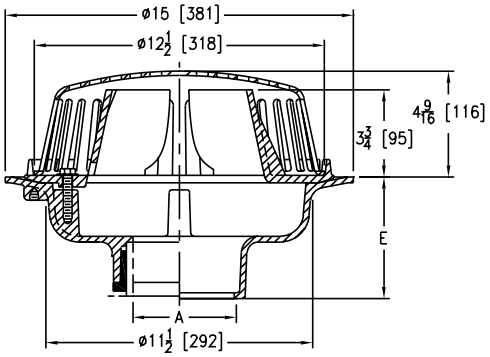

PREFIXES	DESCRIPTION	PIPE SIZE	LIST PRICE
Z105*	D.C.C.I. Body with Polydome	2″, 3″, 4″	1,929.00
ZA105	D.C.C.I. Body with Aluminum Dome	2″, 3″, 4″	2,174.00
ZC105	D.C.C.I. Body with Cast Iron Dome	2″, 3″, 4″	2,144.00

OUTLETS (SPECIFY PIPE SIZE IN INCHES AND TYPE OF OUTLET)

OUTLET	TYPE	OUTLET DESIGNATION (PIPE SIZE/OUTLET TYPE)	E BODY HT. DIM.	ADD
IC	Inside Caulk	3IC, 4IC	5-1/4″	N/C
NH	No-Hub	2NH, 3NH, 4NH	5-1/4″	N/C
NL	Neo-Loc (not recommended for roof drains)	2NL, 3NL, 4NL	4-9/16″	N/C

SUFFIXES			ADD
–C	Underdeck Clamp		244.00
⏲ –DP	Top-Set® Roof Deck Plate (Replaces both -C and -R)		436.00
–E	Static Extension 1″ thru 4″ (Specify Height)	D.C.C.I.	660.00
		Galv.	995.00
	For E Extensions Greater than 4″ - Per Inch (Specify Height)	D.C.C.I.	158.00
		Galv.	242.00
–EA	Adjustable Extension Assembly 2-1/8″ thru 3-1/2″	D.C.C.I.	744.00
		Galv.	1,073.00
–G	Galvanized Cast Iron		889.00
–R	Roof Sump Receiver		272.00
⏲ –TC	Neo-Loc Test Cap Gasket (2″ thru 4″ NL Bottom Outlet Only)		24.00
–VP	Vandal-Proof Secured Top		125.00
–10	6″ High Parabolic Weir for Sloped Roof (ZC or ZA)		N/C

BEST SELLERS	LIST PRICE
Z105-3NH	1,929.00
ZC105-3NH	2,144.00
ZC105-4NH-DP	2,580.00

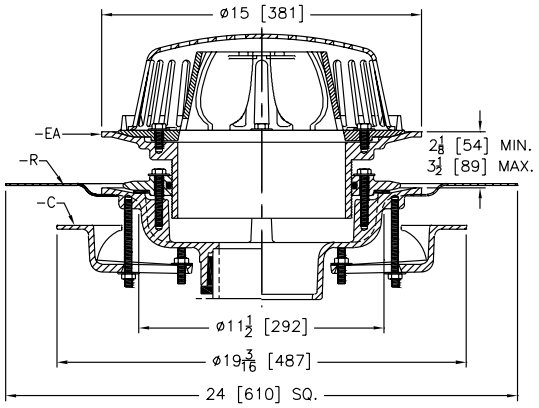

Shown with -C-EA-R Options

ZURN Z105-C-EA-R Control-Flo Roof Drain for dead-level roof construction. Drain is as specified above, with Dura-Coated steel roof sump receiver (-R), Dura-Coated cast iron underdeck clamp (-C), and Dura-Coated cast iron adjustable extension and clamp ring with neoprene O-Ring seal (-EA).

**Regularly furnished unless otherwise specified.*

Items designated as Best Sellers are most specified and are generally in stock for shipment.

⏲ *This symbol denotes a product that is engineered to reduce installation and rework time.*

For additional product information, please visit www.zurn.com.

Z107 20″ WIDE DECK FLANGE ROOF DRAIN

ENGINEERING SPECIFICATION

Zurn Z107 20″ diameter wide deck flange roof drain features Dura-Coated cast iron body with combination membrane flashing clamp/gravel guard and low silhouette polydome.

A Pipe Size inches [mm]	Dome Open Area sq in [cm²]	Approximate Weight lb [kg]
3 [76], 4 [102]	103 [665]	39 [18]
6 [152], 8 [203]		

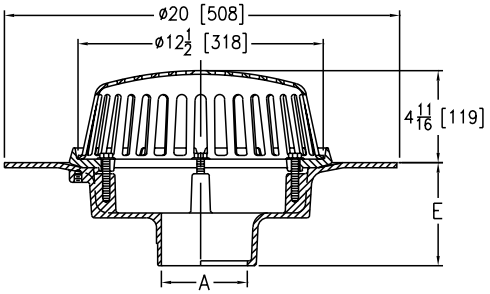

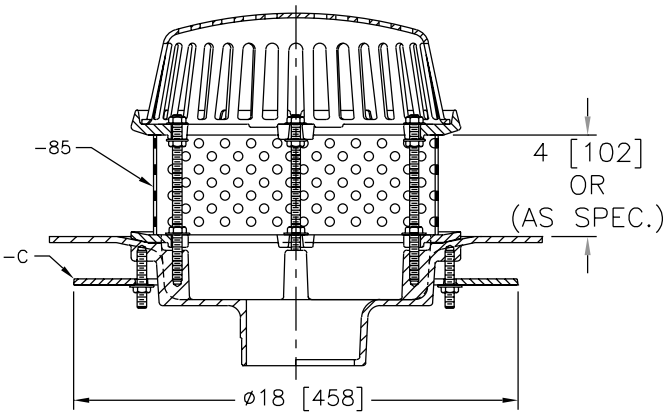

Shown with -C-85 Options

ZURN Z107-C-85 20″ diameter Wide Deck Flange Roof Drain, as specified above, with perforated extension with flat clamp collar (-85), and Dura-Coated cast iron underdeck clamp (-C).

PREFIXES	DESCRIPTION	PIPE SIZE	LIST PRICE
Z107*	D.C.C.I. Body with Polydome	3″, 4″	2,023.00
		6″, 8″	2,324.00
ZA107	D.C.C.I. Body with Aluminum Dome	3″, 4″	2,265.00
		6″, 8″	2,567.00
ZC107	D.C.C.I. Body with Cast Iron Dome	3″, 4″	2,222.00
		6″, 8″	2,529.00

OUTLETS (SPECIFY PIPE SIZE IN INCHES AND TYPE OF OUTLET)				
OUTLET TYPE		OUTLET DESIGNATION (PIPE SIZE/OUTLET TYPE)	E BODY HT. DIM.	ADD
IC	Inside Caulk	3IC, 4IC, 6IC	5-1/4″	N/C
IP	Threaded	3IP, 4IP	5-1/4″	80.00
NH	No-Hub	3NH, 4NH, 6NH, 8NH	5-1/4″	N/C

SUFFIXES			ADD
–AC	Angular Underdeck Clamp		489.00
–AR	Acid Resistant Epoxy Coated Finish		1,355.00
–AW	Adjustable Water Level Regulator 3/4″ thru 4″ (ZC Only)		883.00
	For Each Additional 1″ above 4″ - Per Inch (Specify Height)		242.00
–C	Underdeck Clamp		244.00
–E	Static Extension 1″ thru 4″ (Specify Height)	D.C.C.I.	660.00
		Galv.	995.00
	For E Extensions Greater than 4″ - Per Inch (Specify Height)	D.C.C.I.	158.00
		Galv.	242.00
–EA	Adjustable Extension Assembly 2-1/8″ thru 3-1/2″	D.C.C.I.	704.00
		Galv.	1,045.00
–FG	Flush Grate (Replaces Dome Strainer)		687.00
–G	Galvanized Cast Iron		957.00
–SS	Stainless Steel Mesh Screen Over Dome		502.00
–VP	Vandal-Proof Secured Top		125.00
–W2	2″ Internal Water Dam		420.00
–W3	3″ Internal Water Dam		420.00
–W4	4″ Internal Water Dam		420.00
–84	Stainless Steel Perforated Gravel Guard 1″ thru 4″		784.00
	For Each Additional 1″ above 4″ - Per Inch (Specify Height)		79.00
–85	Stainless Steel Perforated Extension 1″ thru 4″		784.00
	For Each Additional 1″ above 4″ - Per Inch (Specify Height)		79.00
–89	2″ High External Water Dam		233.00

BEST SELLERS	LIST PRICE
Z107-3NH	2,023.00
Z107-3NH-FG	2,710.00

For additional product information, please visit www.zurn.com.

**Regularly furnished unless otherwise specified.*

Items designated as Best Sellers are most specified and are generally in stock for shipment.

This symbol denotes a product that is engineered to reduce installation and rework time.

Z108 15″ DIAMETER DECK RECEPTOR DRAIN

ENGINEERING SPECIFICATION

Zurn Z108 15″ diameter roof drain features Dura-Coated cast iron body with combination membrane flashing clamp, deck receptor frame, and internal bottom dome strainer.

A Pipe Size inches [mm]	Dome Open Area sq in [cm²]	Approximate Weight lb [kg]
2 [51], 3 [76], 4 [102]	53 [342]	41 [19]
6 [152]		39 [18]
8 [203]		42 [19]

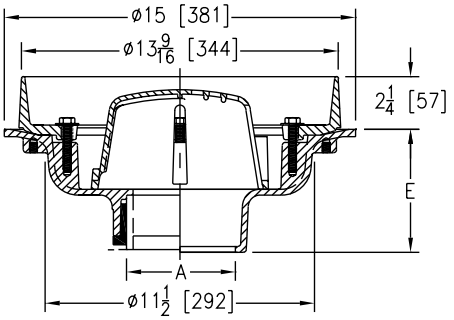

PREFIXES	DESCRIPTION	PIPE SIZE	LIST PRICE
Z108*	D.C.C.I. Body with Collar	2″, 3″, 4″	937.00
		6″	1,254.00
		8″	1,542.00

OUTLETS (SPECIFY PIPE SIZE IN INCHES AND TYPE OF OUTLET)

OUTLET TYPE		OUTLET DESIGNATION (PIPE SIZE/OUTLET TYPE)	E BODY HT. DIM.	ADD
IC	Inside Caulk	3IC, 4IC, 6IC	5-1/4″	N/C
IP	Threaded	2IP, 3IP, 4IP, 6IP, 8IP	3-3/4″	80.00
NH	No-Hub	2NH, 3NH, 4NH, 6NH, 8NH	5-1/4″	N/C
NL	Neo-Loc (not recommended for roof drains)	2NL, 3NL, 4NL	4-9/16″	N/C

SUFFIXES			ADD
–AR	Acid Resistant Epoxy Coated Finish		1,355.00
–C	Underdeck Clamp		244.00
◷ –DE	Deck Extension	D.C.C.I.	703.00
		Galv.	1,044.00
◷ –DP	Top-Set® Roof Deck Plate (Replaces Both -C and -R)		436.00
–E	Static Extension 1″ thru 4″ (Specify Height)	D.C.C.I.	660.00
		Galv.	995.00
	For E Extensions Greater than 4″ - Per Inch (Specify Height)	D.C.C.I.	158.00
		Galv.	242.00
–EA	Adjustable Extension Assembly 2-1/8″ thru 3-1/2″	D.C.C.I.	744.00
		Galv.	1,063.00
–FG	Flush Grate (Replaces Dome Strainer)		824.00
–G	Galvanized Cast Iron		889.00
–HD	6-3/4″ High Aluminum Dome Strainer (61 Sq. In. Open Area)		N/C
–R	Roof Sump Receiver		272.00
◷ –TC	Neo-Loc Test Cap Gasket (2″, 3″, 4″ NL Bottom Outlet Only)		24.00

BEST SELLER	LIST PRICE
Z108-3NH	740.00

**Regularly furnished unless otherwise specified.*

Items designated as Best Sellers are most specified and are generally in stock for shipment.

◷ This symbol denotes a product that is engineered to reduce installation and rework time.

For additional product information, please visit www.zurn.com.

Z110 15″ GREEN ROOF DRAIN WITH PERFORATED SCREEN ASSEMBLY, AND REMOVABLE COVER WITH LIFT HANDLE

ENGINEERING SPECIFICATION

Zurn Z110 15″ green roof drain features Dura-Coated cast iron body with combination membrane flashing clamp/gravel guard and low silhouette polydome. Complete with secured Type 304 (CF8) stainless steel, perforated screen assembly with secured, removable access cover with lift handle.

A Pipe Size inches [mm]	Dome Open Area sq in [cm²]	Approximate Weight lb [kg]
2 [51], 3 [76], 4 [102]	103 [665]	30 [14]
6 [152]		32 [15]
8 [203]		33 [15]

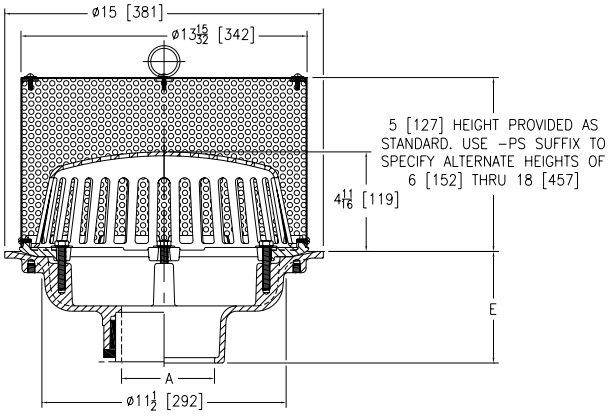

PREFIXES	DESCRIPTION	PIPE SIZE	LIST PRICE
Z110*	D.C.C.I. Body with Polydome	2″, 3″, 4″, 6″, 8″	POA
ZA110	D.C.C.I. Body with Aluminum Dome	2″, 3″, 4″, 6″, 8″	POA
ZC110	D.C.C.I. Body with Cast Iron Dome	2″, 3″, 4″, 6″, 8″	POA

OUTLETS (SPECIFY PIPE SIZE IN INCHES AND TYPE OF OUTLET)

OUTLET TYPE		OUTLET DESIGNATION (PIPE SIZE/OUTLET TYPE)	E BODY HT. DIM.	ADD
IC	Inside Caulk	3IC, 4IC, 6IC	5-1/4″	N/C
IP	Threaded	3IP, 4IP, 6IP, 8IP	3-3/4″	80.00
NH	No-Hub	2NH, 3NH, 4NH, 6NH, 8NH	5-1/4″	N/C
NL	Neo-Loc (not recommended for roof drains)	2NL, 3NL, 4NL	4-9/16″	N/C
		6NL	5-7/16″	N/C

SUFFIXES			ADD
–AC	Angular Underdeck Clamp		489.00
–AR	Acid Resistant Epoxy Coated Finish		1,355.00
–C	Underdeck Clamp		244.00
◷ –DE	Deck Extension (Includes Deck Plate -DP)	D.C.C.I.	966.00
		Galv.	1,461.00
◷ –DP	Top-Set® Roof Deck Plate (Replaces Both the -C and -R)		436.00
–E	Static Extension 1″ thru 4″ (Specify Height)	D.C.C.I.	660.00
		Galv.	995.00
	For E Extensions Greater than 4″ - Per Inch (Specify Height)	D.C.C.I.	158.00
		Galv.	242.00
–EA	Adjustable Extension Assembly 2-1/8″ thru 3-1/2″	D.C.C.I.	724.00
		Galv.	1,073.00
◷ –EB	Top-Set Adjustable Extension Assembly		660.00
–G	Galvanized Cast Iron	Z110	957.00
		ZC110	1,360.00
–PS	Perforated Screen 6″ thru 18″ (Specify Height)		POA
–R	Roof Sump Receiver		272.00
–ST	Dome with Solid Top (ZA and ZC Only)		520.00
◷ –TC	Neo-Loc Test Cap Gasket (2″, 3″, 4″ NL Bottom Outlet Only)		24.00
–VP	Vandal-Proof Secured Screen Cover		125.00
–W2	2″ Internal Water Dam		420.00
–W3	3″ Internal Water Dam		420.00
–W4	4″ Internal Water Dam		420.00
–85	Stainless Steel Perforated Extension 1″ thru 4″		774.00
	For Each Additional 1″ above 4″ - Per Inch (Specify Height)		79.00

BEST SELLERS	LIST PRICE
Z110-2NH-PS=5	POA
Z110-3NH-PS=5	POA
Z110-3NL-PS=5	POA
Z110-4NH-PS=5	POA
Z110-4NL-PS=5	POA
Z110-6NH-PS=5	POA
Z110-6NH-PS=5	POA
Z110-6NL-PS=5	POA

For additional product information, please visit www.zurn.com.

**Regularly furnished unless otherwise specified.*

Items designated as Best Sellers are most specified and are generally in stock for shipment.

◷ This symbol denotes a product that is engineered to reduce installation and rework time.

Z110-AI GREEN ROOF DRAIN WITH PERFORATED SCREEN ASSEMBLY, REMOVABLE COVER WITH LIFT HANDLE, AND AUXILIARY INLET

ENGINEERING SPECIFICATION

Zurn Z110-AI green roof drain features Dura-Coated cast iron body with combination membrane flashing and clamp/gravel guard. Complete with secured Type 304 (CF8) stainless steel, perforated screen assembly with secured, removable access cover with lift handle and auxiliary no-hub inlet connection.

NOTES

Auxiliary inlet sizes are only available as configured below. Auxiliary inlet size 'B' cannot exceed pipe size 'A'.

Dimensions in inches [mm]			Approximate Weight lb [kg]
A	B	C	
2 [51]	2 [51]	2-11/32 [60]	32 [15]
3 [76]	2 [51]	2-11/32 [60]	33 [15]
	3 [76]	2-27/32 [72]	
4 [102], 6 [152], 8 [203]	2 [51]	2-11/32 [60]	34 [15]
	3 [76]	2-27/32 [72]	
	4 [102]	3-3/8 [86]	

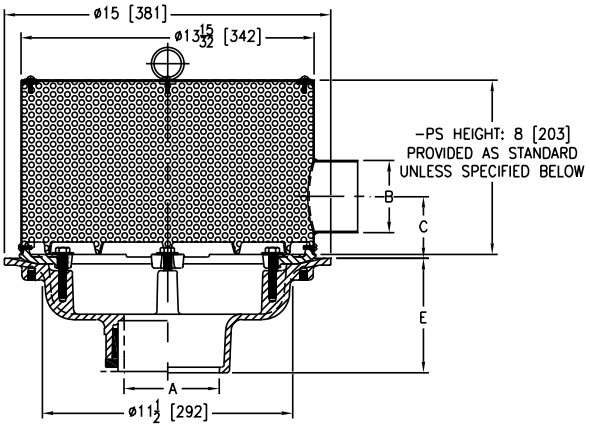

PREFIXES	DESCRIPTION	A PIPE SIZE	B AUX. INLET	LIST PRICE
Z110	D.C.C.I. with Type 304 Perforated Stainless Steel Screen Assembly	2″	2″	Combine with Product Designation for Pricing
		3″	2″, 3″	
		4″, 6″, 8″	2″, 3″, 4″	
PRODUCT DESIGNATION		**B AUX. INLET**	**C DIM.**	**LIST PRICE**
–2AI	2″ Auxiliary Inlet	2″	2-11/32″	POA
–3AI	3″ Auxiliary Inlet	3″	2-27/32″	POA
–4AI	4″ Auxiliary Inlet	4″	3-3/8″	POA
OUTLETS (SPECIFY PIPE SIZE IN INCHES AND TYPE OF OUTLET)				
OUTLET TYPE		**OUTLET DESIGNATION (PIPE SIZE/OUTLET TYPE)**	**E BODY HT. DIM.**	**ADD**
IC	Inside Caulk	3IC, 4IC, 6IC	5-1/4″	N/C
IP	Threaded	2IP, 3IP, 4IP, 6IP, 8IP	3-3/4″	80.00
NH	No-Hub	2NH, 3NH, 4NH, 6NH, 8NH	5-1/4″	N/C
NL	Neo-Loc (not recommended for roof drains)	2NL, 3NL, 4NL	4-9/16″	N/C
		6NL	5-7/16″	N/C
SUFFIXES				**ADD**
–AC	Angular Underdeck Clamp			489.00
–AR	Acid Resistant Epoxy Coated Finish			1,355.00
–C	Underdeck Clamp			244.00
◷ –DE	Deck Extension (Includes Deck Plate -DP)		D.C.C.I.	966.00
			Galv.	1,461.00
◷ –DP	Top-Set® Roof Deck Plate (Replaces both the -C and -R)			436.00
◷ –DR	Top-Set Drain Riser		D.C.C.I.	1,215.00
			Galv.	1,556.00
–E	Static Extension 1″ thru 4″ (Specify Height)		D.C.C.I.	660.00
			Galv.	995.00
	For E Extensions Greater than 4″ - Per Inch (Specify Height)		D.C.C.I.	158.00
			Galv.	242.00
–EA	Adjustable Extension Assembly 2-1/8″ thru 3-1/2″		D.C.C.I.	724.00
			Galv.	1,073.00
◷ –EB	Top-Set Adjustable Extension Assembly			660.00
–G	Galvanized Cast Iron			957.00
–PS	Perforated Screen 9″ thru 18″ (Specify Height)			POA
–R	Roof Sump Receiver			272.00
◷ –TC	Neo-Loc Test Cap Gasket (2″, 3″, 4″ NL Bottom Outlet Only)			24.00
–VP	Vandal-Proof Secured Screen Cover			125.00

**Regularly furnished unless otherwise specified.*

Items designated as Best Sellers are most specified and are generally in stock for shipment.

◷ This symbol denotes a product that is engineered to reduce installation and rework time.

For additional product information, please visit www.zurn.com.

Z111 12″ DIAMETER FLAT DECK ROOF DRAIN FOR METAL DECKS

ENGINEERING SPECIFICATION

Zurn Z111 12″ diameter flat deck roof drain for metal decks features Dura-Coated cast iron body with combination membrane flashing clamp/ gravel guard and low silhouette cast iron dome.

A Pipe Size inches [mm]	Dome Open Area sq in [cm²]	Approximate Weight lb [kg]
3 [76], 4 [102]	78 [503]	22 [10]
6 [152]		24 [11]

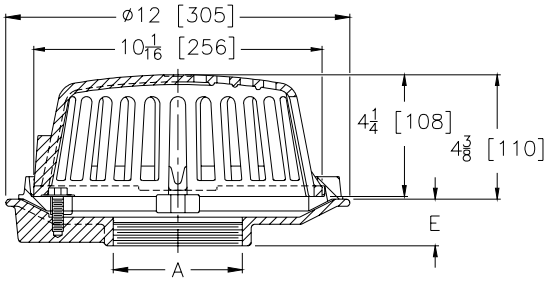

PREFIXES	DESCRIPTION	PIPE SIZE		LIST PRICE
Z111*	D.C.C.I. Body with 4-1/4″ Dome	3″, 4″		857.00
		6″		1,489.00
OUTLETS (SPECIFY PIPE SIZE IN INCHES AND TYPE OF OUTLET)				
OUTLET TYPE		**OUTLET DESIGNATION (PIPE SIZE/OUTLET TYPE)**	**E BODY HT. DIM.**	**ADD**
IP	Threaded	3IP, 4IP	1-5/8″	N/C
		6IP	1-7/8″	N/C
SUFFIXES				**ADD**
–C	Underdeck Clamp			150.00
–FG	Flush Grate (Z only)			345.00
–G	Galvanized Cast Iron			393.00
–R	Roof Sump Receiver			257.00
–SS	Stainless Mesh Screen Over Dome			466.00
–VP	Vandal-Proof Secured Top			116.00

SEE LEGACY ADDENDUM ON PAGE 369 FOR MORE INFORMATION

For additional product information, please visit www.zurn.com.

**Regularly furnished unless otherwise specified.*

Items designated as Best Sellers are most specified and are generally in stock for shipment.

This symbol denotes a product that is engineered to reduce installation and rework time.

Z121 12″ DIAMETER ROOF DRAIN LOW SILHOUETTE DOME

ENGINEERING SPECIFICATION

Zurn Z121 12″ diameter roof drain features Dura-Coated Cast Iron body with combination membrane flashing clamp/gravel guard and low silhouette polydome.

A Pipe Size inches [mm]	Dome Open Area sq in [cm²]	Approximate Weight lb [kg]
2 [51], 3 [76], 4 [102], 6 [152]	78 [503]	22 [10]

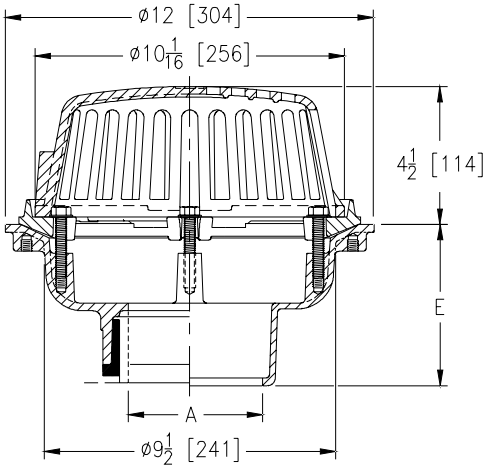

PREFIXES	DESCRIPTION	PIPE SIZE	LIST PRICE
Z121*	D.C.C.I. Body with 4-1/4″ Polydome	2″, 3″, 4″, 6″	626.00
ZA121	D.C.C.I. Body with 6-9/16″ Aluminum Dome	2″, 3″, 4″, 6″	803.00
ZC121	D.C.C.I. Body with Low-Silhouette Cast Iron Dome	2″, 3″, 4″, 6″	783.00

OUTLETS (SPECIFY PIPE SIZE IN INCHES AND TYPE OF OUTLET)

OUTLET	TYPE	OUTLET DESIGNATION (PIPE SIZE/OUTLET TYPE)	E BODY HT. DIM.	ADD
IC	Inside Caulk	2IC, 3IC, 4IC, 6IC	5-1/4″	N/C
IP	Threaded	2IP, 3IP, 4IP, 6IP	3-3/4″	80.00
NH	No-Hub	2NH, 3NH, 4NH, 6NH	5-1/4″	N/C
NL	Neo-Loc (not recommended for roof drains)	2NL, 3NL, 4NL	4-5/8″	N/C

SUFFIXES			ADD
–AR	Acid Resistant Epoxy Coated Finish		1,017.00
–C	Underdeck Clamp		150.00
–DB	Deep Sump Body (IC Only)		446.00
◷ –DP	Top-Set® Roof Deck Plate (Replaces both -C and -R)		339.00
–E	Static Extension 1″ thru 4″	D.C.C.I.	344.00
		Galv.	654.00
	For Each Additional 1″ above 4″ - Per Inch (Specify Height)	D.C.C.I.	173.00
		Galv.	326.00
◷ –EB	Top-Set Adjustable Extension Assembly		503.00
–FG	Flush Grate		345.00
–G	Galvanized Cast Iron		393.00
–R	Roof Sump Receiver		257.00
–SC	Secondary Clamping Collar		184.00
–SS	Stainless Steel Mesh Screen Over Dome		466.00
◷ –TC	Neo-Loc Test Cap Gasket (2″, 3″, 4″ NL Bottom Outlet Only)		24.00
–VP	Vandal-Proof Secured Top		116.00
–XJ	Vertical Expansion Joint (See Z190) (Use with IP Outlets Only)		–
–84	Stainless Steel Perforated Gravel Guard 1″ thru 4″		626.00
	For Each Additional 1″ above 4″ - Per Inch (Specify Height)		72.00
–85	Stainless Steel Perforated Extension 1″ thru 4″		626.00
	For Each Additional 1″ above 4″ - Per Inch (Specify Height)		72.00
–89	2″ High External Water Dam		194.00
–90	90° Threaded Side Outlet Body - 2″, 3″, 4″		158.00

BEST SELLERS	LIST PRICE
Z121-3NH	626.00
Z121-3NH-89	820.00
Z121-3IP-90	864.00
Z121-3NH-DP	965.00
Z121-3NH-SS	1,092.00
ZC121-3NH	783.00
Z121-3NL-FG	971.00
Z121-4NH	626.00
ZC121-4NH	783.00
Z121-4NH-89	820.00
Z121-4NH-89-DP	1,159.00
Z121-4NH-C	776.00
Z121-4NH-DP	965.00
Z121-4NL-89-R	1,077.00
Z121-4NL-R	883.00
ZA121-4NH	803.00
Z121-6NH	626.00
Z121-6NH-89	820.00
Z121-6NH-DP	965.00
ZC121-6NH	783.00

**Regularly furnished unless otherwise specified.*

Items designated as Best Sellers are most specified and are generally in stock for shipment.

◷ This symbol denotes a product that is engineered to reduce installation and rework time.

For additional product information, please visit www.zurn.com.

Z122 12″ DIAMETER DECK RECEPTOR DRAIN

ENGINEERING SPECIFICATION

Zurn Z122 12″ diameter deck receptor drain features Dura-Coated cast iron body with combination membrane flashing clamp/deck receptor frame and internal dome strainer.

A Pipe Size inches [mm]	Approximate Weight lb [kg]
2 [51], 3 [76], 4 [102], 6 [152]	29 [13]

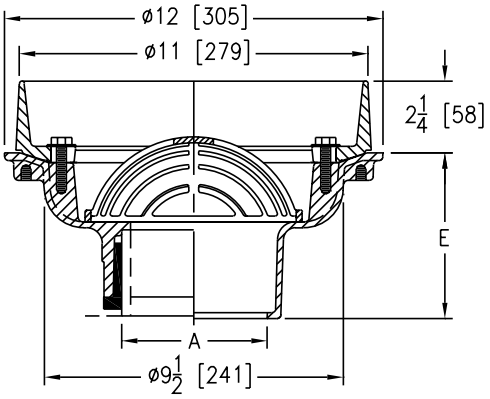

PREFIXES	DESCRIPTION	PIPE SIZE		LIST PRICE
Z122*	D.C.C.I. Body with Collar	2″, 3″, 4″, 6″		719.00
OUTLETS (SPECIFY PIPE SIZE IN INCHES AND TYPE OF OUTLET)				
OUTLET TYPE		**OUTLET DESIGNATION (PIPE SIZE/OUTLET TYPE)**	**E BODY HT. DIM.**	**ADD**
NH	No-Hub	2NH, 3NH, 4NH, 6NH	5-1/4″	N/C
NL	Neo-Loc (not recommended for roof drains)	2NL, 3NL, 4NL	4-5/8″	N/C
SUFFIXES				**ADD**
–AR	Acid Resistant Epoxy Coated Finish			1,017.00
–C	Underdeck Clamp			150.00
⏲ –DP	Top-Set® Roof Deck Plate (Replaces both -C and -R)			339.00
–E	2″ High Static Extension		D.C.C.I.	171.00
			Galv.	326.00
	For Each Additional 1″ above 2″ - Per Inch (Specify Height)		D.C.C.I.	87.00
			Galv.	165.00
⏲ –EB	Top-Set Adjustable Extension Assembly			503.00
–G	Galvanized Cast Iron			171.00
–HD	High Dome			98.00
–R	Roof Sump Receiver			257.00
⏲ –TC	Neo-Loc Test Cap Gasket (2″ thru 4″ NL Bottom Outlet Only)			24.00
BEST SELLERS				**LIST PRICE**
Z122-2NH-C-R				1,126.00
Z122-4NH				719.00

For additional product information, please visit www.zurn.com.

**Regularly furnished unless otherwise specified.*

Items designated as Best Sellers are most specified and are generally in stock for shipment.

⏲ This symbol denotes a product that is engineered to reduce installation and rework time.

Z125 8-3/8″ DIAMETER ROOF DRAIN LOW SILHOUETTE DOME

ENGINEERING SPECIFICATION

Zurn Z125 8-3/8″ diameter roof drain features Dura-Coated cast iron body with combination flashing clamp/gravel guard and low silhouette polydome.

A Pipe Size inches [mm]	Dome Open Area sq in [cm²]	Approximate Weight lb [kg]
2 [51], 3 [76], 4 [102]	43 [277]	14 [6]

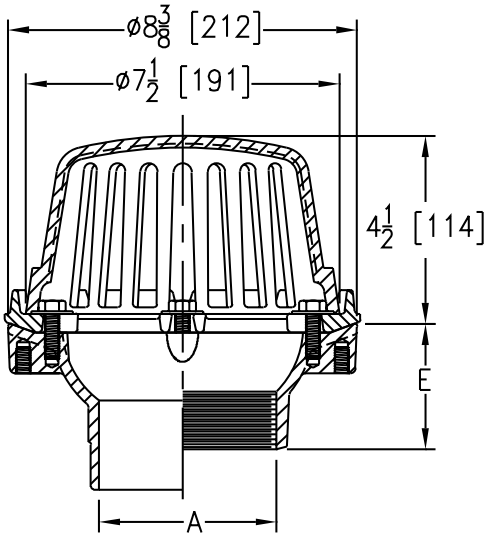

PREFIXES	DESCRIPTION	PIPE SIZE	LIST PRICE
Z125*	D.C.C.I. Body with 4-1/4″ Poly Dome	2″, 3″, 4″	531.00
ZA125	D.C.C.I. Body with 4-1/4″ Aluminum Dome	2″, 3″, 4″	704.00
ZC125	D.C.C.I. Body with Low Silhouette Cast Iron Dome	2″, 3″, 4″	626.00

OUTLETS (SPECIFY PIPE SIZE IN INCHES AND TYPE OF OUTLET)

OUTLET TYPE		OUTLET DESIGNATION (PIPE SIZE/OUTLET TYPE)	E BODY HT. DIM.	ADD
IC	Inside Caulk	2IC, 3IC, 4IC	3-7/8″	N/C
IP	Threaded	2IP	2-7/16″	80.00
		3IP	2-3/4″	80.00
		4IP	3″	80.00
NH	No-Hub	2NH, 3NH, 4NH	4″	N/C
NL	Neo-Loc (not recommended for roof drains)	2NL, 3NL, 4NL	3-13/16″	N/C

SUFFIXES			ADD
–AR	Acid Resistant Epoxy Coated Finish		764.00
–C	Underdeck Clamp		150.00
◷ –DP	Top-Set® Roof Deck Plate (Replaces -C and -R)		339.00
–E	Static Extension 1″ thru 4″	D.C.C.I.	344.00
		Galv.	654.00
	For Each Additional 1″ above 4″ - Per Inch (Specify Height)	D.C.C.I.	173.00
		Galv.	326.00
◷ –EB	Top-Set Adjustable Extension Assembly		503.00
–FG	Flush Grate (Replaces Dome Strainer)		251.00
–G	Galvanized Cast Iron		200.00
–R	Roof Sump Receiver		257.00
–SC	Secondary Clamping Collar		194.00
–SS	Stainless Steel Mesh Screen Over Dome		351.00
◷ –TC	Neo-Loc Test Cap Gasket (2″, 3″, 4″ NL Bottom Outlet Only)		24.00
–VP	Vandal-Proof Secured Top		116.00
–XJ	Vertical Expansion Joint (See Z190) (Use with IP Outlets Only)		–
–84	Stainless Steel Perforated Gravel Guard 1″ thru 4″		462.00
	For Each Additional 1″ above 4″ - Per Inch (Specify Height)		72.00
–85	Stainless Steel Perforated Extension 1″ thru 4″		462.00
	For Each Additional 1″ above 4″ - Per Inch (Specify Height)		72.00
–89	2″ High External Water Dam		194.00
–90	90° Threaded Side Outlet Body (2″, 3″, 4″)		184.00

BEST SELLERS	LIST PRICE
Z125-2NH	531.00
Z125-2NH-DP	870.00
Z125-3IP-90	795.00
Z125-3NH	531.00
Z125-3NH-89	725.00
Z125-3NH-89-DP	1,064.00
Z125-3NH-C	681.00
Z125-3NH-C-E2-FG	1,276.00
Z125-3NH-DP	870.00
ZC125-3NH	626.00
ZC125-3NH-DP	965.00
Z125-3NL	531.00
Z125-3NL-89	725.00
Z125-3NL-89-R	982.00
Z125-3NL-R	788.00
Z125-4NH	531.00
Z125-4NH-89	725.00
Z125-4NH-DP	870.00
ZC125-4NH	626.00

**Regularly furnished unless otherwise specified.*

Items designated as Best Sellers are most specified and are generally in stock for shipment.

◷ This symbol denotes a product that is engineered to reduce installation and rework time.

For additional product information, please visit www.zurn.com.

Z127 8-1/2" DIAMETER DECK RECEPTOR DRAIN

ENGINEERING SPECIFICATION

Zurn Z127 8-1/2" diameter deck receptor drain features Dura-Coated cast iron body with combination membrane flashing clamp/deck receptor frame and internal dome strainer.

A Pipe Size inches [mm]	Approximate Weight lb [kg]
2 [51], 3 [76], 4 [102]	19 [9]

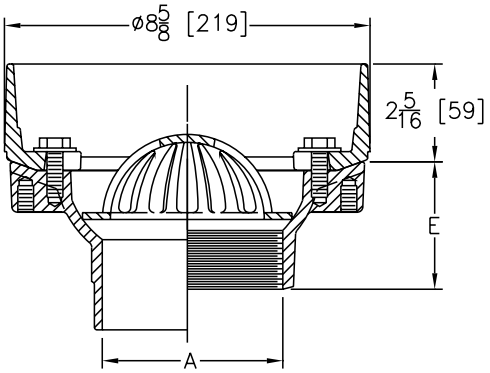

PREFIXES	DESCRIPTION	PIPE SIZE		LIST PRICE
Z127*	D.C.C.I. Body with Collar	2", 3", 4"		593.00
OUTLETS (SPECIFY PIPE SIZE IN INCHES AND TYPE OF OUTLET)				
OUTLET TYPE		**OUTLET DESIGNATION (PIPE SIZE/OUTLET TYPE)**	**E BODY HT. DIM.**	**ADD**
IC	Inside Caulk	2IC, 3IC, 4IC	3-7/8"	N/C
IP	Threaded	2IP	2-7/16"	80.00
		3IP	2-3/4"	80.00
		4IP	3"	80.00
NH	No-Hub	2NH, 3NH, 4NH	3-31/32"	N/C
NL	Neo-Loc (not recommended for roof drains)	2NL, 3NL, 4NL	3-27/32"	N/C

SUFFIXES			ADD
–AR	Acid Resistant Epoxy Coated Finish		764.00
–C	Underdeck Clamp		150.00
⏲ –DP	Top-Set® Roof Deck Plate (Replaces -C and -R)		339.00
–E	2" High Static Extension	D.C.C.I.	171.00
		Galv.	326.00
	For Each Additional 1" above 2" - Per Inch (Specify Height)	D.C.C.I.	87.00
		Galv.	165.00
⏲ –EB	Top-Set Adjustable Extension Assembly		503.00
–G	Galvanized Cast Iron		198.00
–HD	High Dome		N/C
–R	Roof Sump Receiver		257.00
⏲ –TC	Neo-Loc Test Cap Gasket (2", 3", 4" NL Bottom Outlet Only)		24.00

BEST SELLERS	LIST PRICE
Z127-2NH	593.00
Z127-2NH-DP	932.00

For additional product information, please visit www.zurn.com.

**Regularly furnished unless otherwise specified.*

Items designated as Best Sellers are most specified and are generally in stock for shipment.

⏲ *This symbol denotes a product that is engineered to reduce installation and rework time.*

Z130 14-9/32" DIAMETER SIPHONIC MAIN ROOF DRAIN

ENGINEERING SPECIFICATION

Zurn Z130 14-9/32" diameter siphonic roof drain features Dura-Coated ductile iron drain body, membrane flashing clamp, and low silhouette polydome. Complete with vandal-proof secured, Dura-Coated cast iron, air-restricting baffle and grate, and Top-Set® deck plate.

A Pipe Size inches [mm]	Dome Open Area sq in [cm²]	Approximate Weight lb [kg]
2 [51], 3 [76], 4 [102]	28 [181]	44 [20]

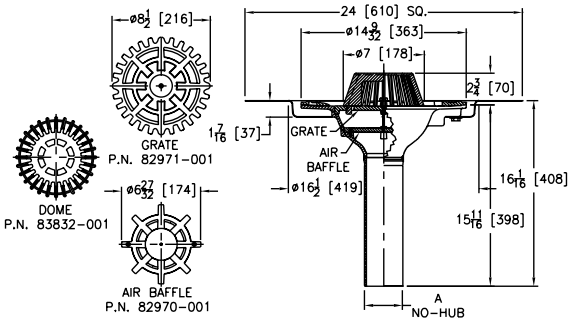

PREFIXES	DESCRIPTION	PIPE SIZE		LIST PRICE
Z130*	Dura-Coated Ductile Iron Body with Polydome	2", 3", 4"		POA
OUTLETS (SPECIFY PIPE SIZE IN INCHES AND TYPE OF OUTLET)				
OUTLET TYPE		**OUTLET DESIGNATION (PIPE SIZE/OUTLET TYPE)**		**ADD**
NH	No-Hub	2NH, 3NH, 4NH		N/C
SUFFIXES				**ADD**
–DR	Top-Set® Drain Riser		D.C.C.I.	POA
			Galv.	POA
–EB	Top-Set Adjustable Extension Assembly			POA
–LD	Less Dome			POA
–LG	Less Dome and Grate			POA
–VP	Vandal-Proof Secured Top			POA
BEST SELLERS				**LIST PRICE**
Z130-2NH				POA
Z130-3NH				POA
Z130-4NH				POA

Z131 14-9/32" DIAMETER SIPHONIC OVERFLOW ROOF DRAIN

ENGINEERING SPECIFICATION

Zurn Z131 14-9/32" diameter siphonic overflow roof drain features Dura-Coated ductile iron drain body, 'B' high external combination membrane flashing clamp/ overflow gravel guard, and low silhouette polydome. Complete with vandal-proof secured, Dura-Coated cast iron, air-restricting baffle and grate, and Top-Set® deck plate.

A Pipe Size inches [mm]	Dome Open Area sq in [cm²]	Approximate Weight lb [kg]
2 [51], 3 [76], 4 [102]	28 [181]	48 [22]

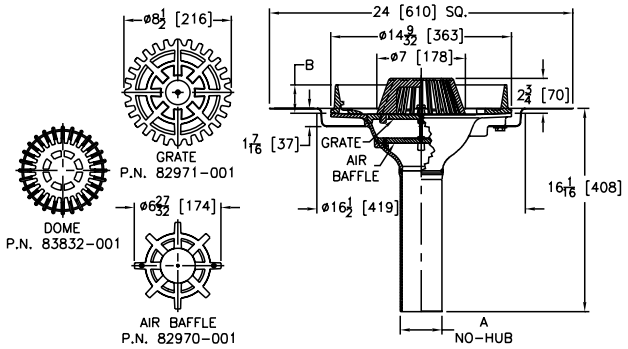

PREFIXES	DESCRIPTION	PIPE SIZE		LIST PRICE
Z131*	Dura-Coated Ductile Iron Body with Polydome	2", 3", 4"		POA
OUTLETS (SPECIFY PIPE SIZE IN INCHES AND TYPE OF OUTLET)				
OUTLET TYPE		**OUTLET DESIGNATION (PIPE SIZE/OUTLET TYPE)**	**"B" DIMENSION**	**ADD**
NH	No-Hub	2NH	2-1/4"	N/C
		3NH, 4NH	3-5/16"	N/C
SUFFIXES				**ADD**
–DR	Top-Set® Drain Riser		D.C.C.I.	POA
			Galv.	POA
–EB	Top-Set Adjustable Extension Assembly			POA
–VP	Vandal-Proof Secured Top			POA
BEST SELLERS				**LIST PRICE**
Z131-2NH				POA
Z131-3NH				POA
Z131-4NH				POA

**Regularly furnished unless otherwise specified.*

Items designated as Best Sellers are most specified and are generally in stock for shipment.

This symbol denotes a product that is engineered to reduce installation and rework time.

For additional product information, please visit www.zurn.com.

Z150 14″ SQUARE TOP PROM-DECK DRAIN WITH HEEL-PROOF GRATE AND ROTATABLE FRAME

PATENTED

ENGINEERING SPECIFICATION

Zurn Z150 14″ square top prom-deck drain features Dura-Coated cast iron body with rotatable, square promenade frame with seepage openings, frame clamps and heavy-duty, heel-proof grate.

NOTES

†Add 3/16″ to 2″ dimension and 3/8″ to 14″ dimension

A Pipe Size inches [mm]	Grate Open Area sq in [cm²]	Approximate Weight lb [kg]
2 [51], 3 [76], 4 [102]	44 [284]	53 [24]
6 [152]		
8 [203]		54 [24]

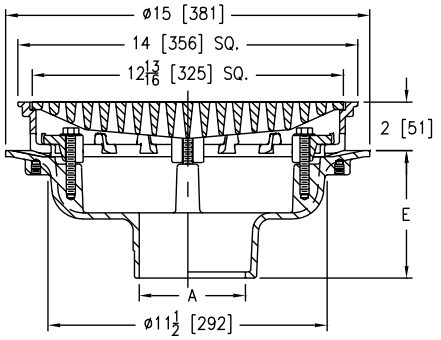

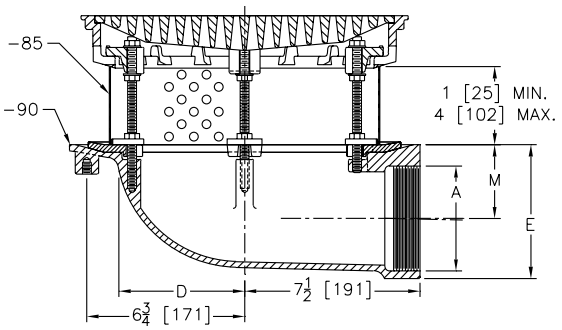

Shown with -85-90 Options

ZURN Z150-85-90 14″ Square Top Lateral Prom-Deck Drain. Dura-Coated cast iron body with side outlet, rotatable square promenade frame with seepage openings, frame clamps, perforated stainless steel extension with secondary clamp collar, and heavy-duty heel-proof grate.

PREFIXES	DESCRIPTION	PIPE SIZE	LIST PRICE
Z150*	D.C.C.I. Body with Top	2″, 3″, 4″	1,202.00
		6″	1,489.00
		8″	1,767.00
ZB150†	D.C.C.I. Body with Polished Bronze Top	2″, 3″, 4″	2,016.00
		6″	2,294.00
		8″	2,583.00
ZN150†	D.C.C.I. Body with Polished Nickel Bronze Top	2″, 3″, 4″	2,205.00
		6″	2,486.00
		8″	2,764.00

OUTLETS (SPECIFY PIPE SIZE IN INCHES AND TYPE OF OUTLET)				
OUTLET TYPE		OUTLET DESIGNATION (PIPE SIZE/OUTLET TYPE)	E BODY HT. DIM.	ADD
IC	Inside Caulk	3IC, 4IC, 6IC	5-1/4″	N/C
IP	Threaded	2IP, 3IP, 4IP, 6IP, 8IP	3-3/4″	80.00
NH	No-Hub	2NH, 3NH, 4NH, 6NH, 8NH	5-1/4″	N/C
NL	Neo-Loc (not recommended for roof drains)	2NL, 3NL, 4NL	4-9/16″	N/C

SUFFIXES			ADD
–AR	Acid Resistant Epoxy Coated Finish		1,355.00
–C	Underdeck Clamp		244.00
◷ –DE	Deck Extension	D.C.C.I.	703.00
		Galv.	1,044.00
–DG	Duresist Grate		615.00
◷ –DP	Top-Set® Roof Deck Plate (Replaces -C and -R)		436.00
◷ –DR	Top-Set Drain Riser (Adjustment from 3-5/8″ thru 7-1/4″)	D.C.C.I.	1,215.00
		Galv.	1,556.00
–DT	Decorative Polished Top (ZB and ZN Only)		178.00
–E	Static Extension 1″ thru 4″ (Specify Height)	D.C.C.I.	660.00
		Galv.	995.00
	For E Extensions Greater than 4″ - Per Inch (Specify Height)	D.C.C.I.	158.00
		Galv.	242.00
–EA	Adjustable Extension Assembly 2-1/8″ thru 3-1/2″	D.C.C.I.	724.00
		Galv.	1,073.00
◷ –EB	Top-Set Adjustable Extension Assembly		660.00
–G	Galvanized Cast Iron		889.00
–R	Roof Sump Receiver		272.00
–S	Secondary Strainer		98.00
–SC	Secondary Clamp Collar		185.00
◷ –TC	Neo-Loc Test Cap Gasket (2″, 3″, 4″ NL Bottom Outlet Only)		24.00
–TS	Top Secured with Slotted Screws		129.00
–VP	Vandal-Proof Secured Top		147.00
–XJ	Vertical Expansion Joint (See Z190) (Use with IP Outlets Only)		–
–Y	Sediment Bucket		257.00
–85	Stainless Steel Perforated Extension 1″ thru 4″		784.00
	For Each Additional 1″ above 4″ - Per Inch (Specify Height)		79.00
–90	90° Threaded Side Outlet Body (2″, 3″, 4″, 6″)		368.00

BEST SELLERS	LIST PRICE
Z150-3NH	1,202.00
Z150-3NH-DP	1,638.00
ZN150-3NH	2,205.00
Z150-3NL	1,202.00
Z150-3NL-85=4	1,986.00
Z150-4NH	1,202.00
Z150-4NH-85=4	1,986.00
Z150-4NH-85=4-EA	2,710.00

BEST SELLERS	LIST PRICE
ZN150-4NH	2,205.00
Z150-4NL	1,202.00
Z150-4NL-E4	1,862.00
ZB150-4NL-EA	2,740.00
ZN150-4NL	2,205.00
Z150-6NH	1,489.00
ZN150-6NH	2,486.00
Z150-8NH	1,767.00

For additional product information, please visit www.zurn.com.

**Regularly furnished unless otherwise specified.*

Items designated as Best Sellers are most specified and are generally in stock for shipment.

◷ This symbol denotes a product that is engineered to reduce installation and rework time.

Z154 12″ SQUARE TOP PROM-DECK DRAIN WITH HEEL-PROOF GRATE AND ROTATABLE FRAME

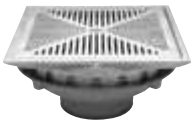

PATENTED

ENGINEERING SPECIFICATION

Zurn Z154 12″ square top prom-deck drain features Dura-Coated cast iron body with rotatable, light-duty, square promenade frame with seepage openings, frame clamps and light-duty, heel-proof grate.

NOTES

†Add 3/16″ to 2″ dimension and 5/8″ to 12″ dimension

A Pipe Size inches [mm]	Grate Open Area sq in [cm²]	Approximate Weight lb [kg]
2 [51], 3 [76], 4 [102], 6 [152]	34 [219]	29 [13]

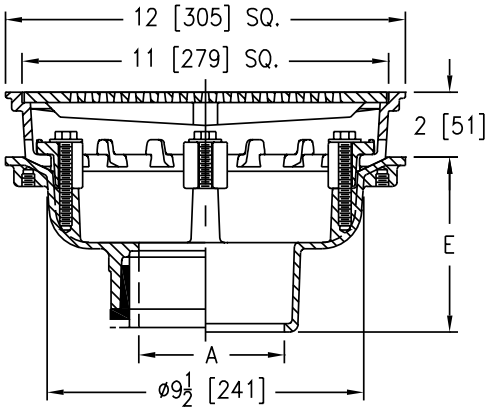

PREFIXES	DESCRIPTION	PIPE SIZE	LIST PRICE
Z154*	D.C.C.I. Body with Top	2″, 3″, 4″, 6″	1,078.00
ZB154†	D.C.C.I. Body with Polished Bronze Top	2″, 3″, 4″, 6″	1,719.00
ZN154†	D.C.C.I. Body with Polished Nickel Bronze Top	2″, 3″, 4″, 6″	1,817.00

OUTLETS (SPECIFY PIPE SIZE IN INCHES AND TYPE OF OUTLET)				
OUTLET TYPE		OUTLET DESIGNATION (PIPE SIZE/OUTLET TYPE)	E BODY HT. DIM.	ADD
IC	Inside Caulk	2IC, 3IC, 4IC, 6IC	5-1/4″	N/C
IP	Threaded	2IP, 3IP, 4IP, 6IP	3-3/4″	80.00
NH	No-Hub	2NH, 3NH, 4NH, 6NH	5-1/4″	N/C
NL	Neo-Loc (not recommended for roof drains)	2NL, 3NL, 4NL	4-9/16″	N/C

SUFFIXES			ADD
–AR	Acid Resistant Epoxy Coated Finish		1,017.00
–C	Underdeck Clamp		150.00
–DG	Duresist Grate (Z Only)		544.00
⏲ –DP	Top-Set® Roof Deck Plate		339.00
–DT	Decorative Polished Top (ZB and ZN Only)		178.00
–E	2″ High Static Extension	D.C.C.I.	171.00
		Galv.	326.00
	For Each Additional 1″ above 2″ - Per Inch (Specify Height)	D.C.C.I.	87.00
		Galv.	165.00
⏲ –EB	Top-Set Adjustable Extension Assembly		503.00
–G	Galvanized Cast Iron		501.00
–S	Secondary Strainer		98.00
–SC	Secondary Clamp Collar		194.00
⏲ –TC	Neo-Loc Test Cap Gasket (2″, 3″, 4″ NL Bottom Outlet Only)		24.00
–TS	Top Secured with Slotted Screws		129.00
–VP	Vandal-Proof Secured Top		147.00
–Y	Sediment Bucket		257.00
–85	Stainless Steel Perforated Extension 1″ thru 4″		626.00
	For Each Additional 1″ above 4″ - Per Inch (Specify Height)		72.00
–90	90° Threaded Side Outlet Body (2″, 3″, 4″)		158.00

BEST SELLERS	LIST PRICE
Z154-3NH	1,078.00
Z154-3NH-C	1,228.00
Z154-3NH-VP	1,225.00
Z154-3NL	1,078.00
Z154-3NL-85=4	1,704.00
ZN154-3NL	1,817.00
ZB154-3NL	1,719.00
Z154-4NH	1,078.00
Z154-4NH-EB	1,581.00
ZN154-4NH-85=4	2,443.00
ZN154-4NL	1,817.00
ZN154-4NL-VP	1,964.00
ZN154-6NH	1,817.00

**Regularly furnished unless otherwise specified.*

Items designated as Best Sellers are most specified and are generally in stock for shipment.

⏲ *This symbol denotes a product that is engineered to reduce installation and rework time.*

For additional product information, please visit www.zurn.com.

Z158 10″ SQUARE TOP PROM-DECK DRAIN WITH HEEL-PROOF GRATE AND ROTATABLE FRAME

PATENTED

ENGINEERING SPECIFICATION

Zurn Z158 10″ square top prom-deck drain features Dura-Coated cast iron body with rotatable, square promenade frame with seepage openings, frame clamps and light-duty, heel-proof grate.

NOTES

†Add 3/16″ to 2-1/4″ dimension and 5/8″ to 10″ dimension

A Pipe Size inches [mm]	Grate Open Area sq in [cm²]	Approximate Weight lb [kg]
2 [51], 3 [76], 4 [102]	21 [136]	20 [9]

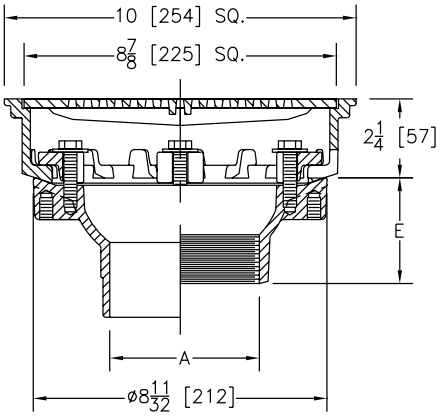

PREFIXES	DESCRIPTION	PIPE SIZE	LIST PRICE
Z158*	D.C.C.I. Body with Top	2″, 3″, 4″	821.00
ZB158†	D.C.C.I. Body with Polished Bronze Top	2″, 3″, 4″	1,199.00
ZN158†	D.C.C.I. Body with Polished Nickel Bronze Top	2″, 3″, 4″	1,250.00

OUTLETS (SPECIFY PIPE SIZE IN INCHES AND TYPE OF OUTLET)

OUTLET	TYPE	OUTLET DESIGNATION (PIPE SIZE/OUTLET TYPE)	E BODY HT. DIM.	ADD
IC	Inside Caulk	3IC, 4IC	3-7/8″	N/C
IP	Threaded	2IP	2-7/16″	80.00
		3IP	2-3/4″	80.00
		4IP	3″	80.00
NH	No-Hub	2NH, 3NH, 4NH	4″	N/C
NL	Neo-Loc (not recommended for roof drains)	2NL, 3NL, 4NL	3-13/16″	N/C

SUFFIXES			ADD
–AR	Acid Resistant Epoxy Coated Finish		758.00
–C	Underdeck Clamp		150.00
–DG	Duresist Grate		476.00
⏲ –DP	Top-Set® Roof Deck Plate		339.00
–DT	Decorative Polished Top (ZB and ZN Only)		178.00
–E	2″ High Static Extension	D.C.C.I.	171.00
		Galv.	326.00
	For Each Additional 1″ above 2″ - Per Inch (Specify Height)	D.C.C.I.	87.00
		Galv.	165.00
⏲ –EB	Top-Set Adjustable Extension Assembly		503.00
–G	Galvanized Cast Iron		272.00
–SC	Secondary Clamp Collar		194.00
⏲ –TC	Neo-Loc Test Cap Gasket (2″, 3″, 4″ NL Bottom Outlet Only)		24.00
–TS	Top Secured with Slotted Screws		129.00
–VP	Vandal-Proof Secured Top		147.00
–Y	Sediment Bucket		211.00
–85	Stainless Steel Perforated Extension 1″ thru 4″		462.00
	For Each Additional 1″ above 4″ - Per Inch (Specify Height)		79.00
–90	90° Threaded Side Outlet Body (2″, 3″, 4″)		184.00

BEST SELLERS	LIST PRICE
Z158-3NH	821.00
Z158-3NH-C-E2	1,142.00
Z158-4NH	821.00
Z158-4NL	821.00
ZB158-3IP	1,279.00
ZN158-3NH	1,250.00
ZN158-3NL	1,250.00
ZB158-4NL	1,199.00
ZB158-4NL-VP	1,346.00
ZN158-4NL	1,250.00

For additional product information, please visit www.zurn.com.

**Regularly furnished unless otherwise specified.*

Items designated as Best Sellers are most specified and are generally in stock for shipment.

⏲ This symbol denotes a product that is engineered to reduce installation and rework time.

Z160 135° SCUPPER DRAIN

ENGINEERING SPECIFICATION

Zurn ZRB160 135° scupper drain features Dura-Coated cast iron body and plain bronze grate with integral membrane clamp.

Dimensions in inches [mm]			
A	B	Grate Open Area sq in [cm²]	Approximate Weight lb [kg]
4 [102]	2-9/16 [65]	114 [735]	52 [24]
6 [152]	3-5/8 [92]		

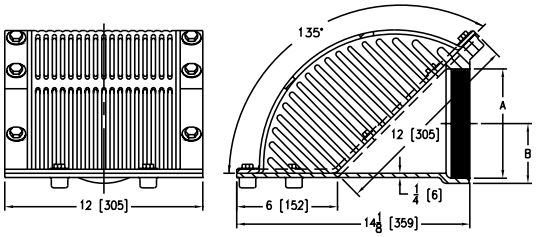

PREFIXES	DESCRIPTION	PIPE SIZE	LIST PRICE
ZRB160*	D.C.C.I. Body with Plain Bronze Grate	4", 6"	3,843.00
ZB160	D.C.C.I. Body with Polished Bronze Grate	4", 6"	4,393.00
ZN160	D.C.C.I. Body with Polished Nickel Bronze Grate	4", 6"	4,620.00
OUTLETS (SPECIFY PIPE SIZE IN INCHES AND TYPE OF OUTLET)			
OUTLET TYPE		**OUTLET DESIGNATION (PIPE SIZE/OUTLET TYPE)**	**ADD**
IP	Threaded	4IP, 6IP	N/C
SUFFIXES			**ADD**
–G	Galvanized Cast Iron		536.00
SEE LEGACY ADDENDUM ON PAGE 369 FOR MORE INFORMATION			

Z161 3" X 10" OBLIQUE SCUPPER DRAIN

ENGINEERING SPECIFICATION

Zurn ZARB161 3" x 10" oblique scupper drain features plain bronze body with gasket and plain bronze grate with integral membrane clamp.

Dimensions in inches [mm]			
A	B	Grate Open Area sq in [cm²]	Approximate Weight lb [kg]
2 [51]	1-1/4 [32]	19 [123]	23 [10]
3 [76]	1-1/16 [27]		21 [10]

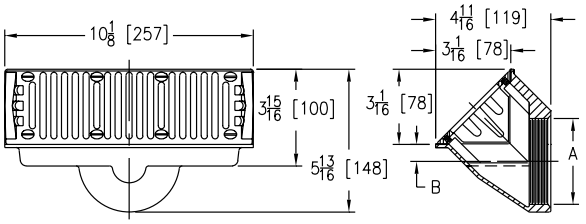

PREFIXES	DESCRIPTION	PIPE SIZE	LIST PRICE
ZARB161*	All Bronze Body with Plain Bronze Grate	2", 3"	1,155.00
ZAB161	All Bronze Body with Polished Bronze Grate	2", 3"	1,480.00
ZANB161	All Bronze Body with Polished Nickel Bronze Grate	2", 3"	1,829.00
OUTLETS (SPECIFY PIPE SIZE IN INCHES AND TYPE OF OUTLET)			
OUTLET TYPE		**OUTLET DESIGNATION (PIPE SIZE/OUTLET TYPE)**	**ADD**
IP	Threaded	2IP, 3IP	N/C
BEST SELLER			**LIST PRICE**
ZARB161-3IP			1,155.00

**Regularly furnished unless otherwise specified.*

Items designated as Best Sellers are most specified and are generally in stock for shipment.

This symbol denotes a product that is engineered to reduce installation and rework time.

For additional product information, please visit www.zurn.com.

Z163 15″ DIAMETER COMBINATION MAIN ROOF AND OVERFLOW DRAIN WITH LOW SILHOUETTE DOMES AND DOUBLE TOP-SET® DECK PLATE

PATENTED

ENGINEERING SPECIFICATION

Zurn Z163 15″ diameter roof drain and overflow drain feature Dura-Coated cast iron bodies with combination membrane flashing clamp/gravel guards, double Top-Set® deck plate and low silhouette polydomes.

A Pipe Size inches [mm]	Dome Open Area sq in [cm²]	Approximate Weight lb [kg]
2 [51], 3 [76], 4 [102]	103 [665]	73 [33]
6 [152]		74 [34]
8 [203]		75 [34]

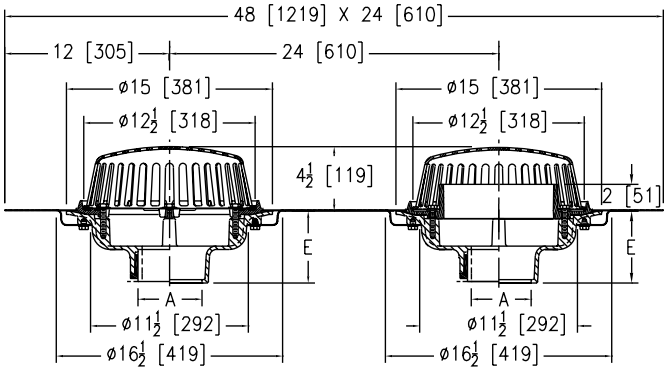

BEST SELLERS	LIST PRICE
Z163-3NH	2,485.00
ZA163-3NH	2,967.00
ZA163-3NH-EA	4,415.00
Z163-3NL-TC	2,532.00
Z163-4NH	2,485.00
Z163-4NH-EA	3,933.00
ZA163-4NH	2,967.00
ZA163-4NH-EA	4,415.00
Z163-4NL-TC	2,532.00
ZC163-4IP	3,057.00
Z163-6NH	3,087.00
Z163-6NH-DR	5,521.00
Z163-6NH-EA	4,535.00
Z163-6NH-EA-G-SC	5,610.00
Z163-6NH-VP-W3	3,755.00
Z163-6NH-W4	3,507.00
ZA163-6NH	3,575.00
ZA163-6NH-EA	5,023.00
ZC163-6NH	3,502.00
ZC163-6NH-EA	4,950.00
Z163-8NH	3,691.00
Z163-8NH-EA	5,139.00

PREFIXES	DESCRIPTION	PIPE SIZE	LIST PRICE
Z163*	D.C.C.I. Body with Polydome	2″, 3″, 4″	2,485.00
		6″	3,087.00
		8″	3,691.00
ZA163	D.C.C.I. Body with Aluminum Dome	2″, 3″, 4″	2,967.00
		6″	3,575.00
		8″	4,178.00
ZC163	D.C.C.I. Body with Cast Iron Dome	2″, 3″, 4″	2,900.00
		6″	3,502.00
		8″	4,107.00

OUTLETS (SPECIFY PIPE SIZE IN INCHES AND TYPE OF OUTLET)

OUTLET	TYPE	OUTLET DESIGNATION (PIPE SIZE/OUTLET TYPE)	E BODY HT. DIM.	ADD
IC	Inside Caulk	3IC, 4IC, 6IC	5-1/4″	N/C
IP	Threaded	2IP, 3IP, 4IP, 6IP, 8IP	3-3/4″	157.00
NH	No-Hub	2NH, 3NH, 4NH, 6NH, 8NH	5-1/4″	N/C
NL	Neo-Loc (not recommended for roof drains)	2NL, 3NL, 4NL	4-5/8″	N/C

SUFFIXES			ADD
–AR	Acid Resistant Epoxy Coated Finish		2,705.00
–DE	Deck Extension	D.C.C.I.	1,405.00
		Galv.	2,085.00
–DR	Top-Set® Drain Riser		2,434.00
–E	Static Extension 1″ thru 4″ (Specify Height)	D.C.C.I.	1,318.00
		Galv.	1,989.00
	For E Extensions Greater than 4″ - Per Inch (Specify Height)	D.C.C.I.	314.00
		Galv.	478.00
–EA	Adjustable Extension Assembly 2-1/8″ thru 3-1/2″	D.C.C.I.	1,448.00
		Galv.	2,147.00
–G	Galvanized Cast Iron (ZC Only)	Z	1,917.00
		ZC	2,728.00
–HD	6-3/4″High Aluminum Dome Strainer, Open Area 148 Sq. In. (ZA Only)		453.00
–SC	Secondary Clamping Collar		376.00
–SS	Stainless Mesh Screen Over Dome		1,006.00
–TC	Neo-Loc Test Cap Gasket (2″, 3″, 4″ NL Bottom Outlet Only)		47.00
–VP	Vandal-Proof Secured Top		248.00
–W3	3″ Internal Water Dam		420.00
–W4	4″ Internal Water Dam		420.00
–XJ	Vertical Expansion Joint (See Z190)		–
–84	Stainless Steel Perforated Gravel Guard 1″ thru 4″		1,566.00
	For Each Additional 1″ above 4″ - Per Inch (Specify Height)		72.00
–85	Stainless Steel Perforated Extension 1″ thru 4″		1,577.00
	For Each Additional 1″ above 4″ - Per Inch (Specify Height)		72.00
–89	2″ High External Water Dam (Replaces Internal Dam)		N/C

For additional product information, please visit www.zurn.com.

**Regularly furnished unless otherwise specified.*

Items designated as Best Sellers are most specified and are generally in stock for shipment.

This symbol denotes a product that is engineered to reduce installation and rework time.

Z164 12″ DIAMETER COMBINATION MAIN ROOF AND OVERFLOW DRAIN WITH LOW SILHOUETTE DOMES AND DOUBLE TOP-SET® DECK PLATE

PATENTED

ENGINEERING SPECIFICATION

Zurn Z164 12″ diameter roof drain and overflow drain feature Dura-Coated cast iron bodies with combination membrane flashing clamp/gravel guards, double Top-Set® deck plate and low silhouette cast iron domes.

A Pipe Size inches [mm]	Dome Open Area sq in [cm²]	Approximate Weight lb [kg]
2 [51], 3 [76], 4 [102], 6 [152]	78 [503]	66 [30]

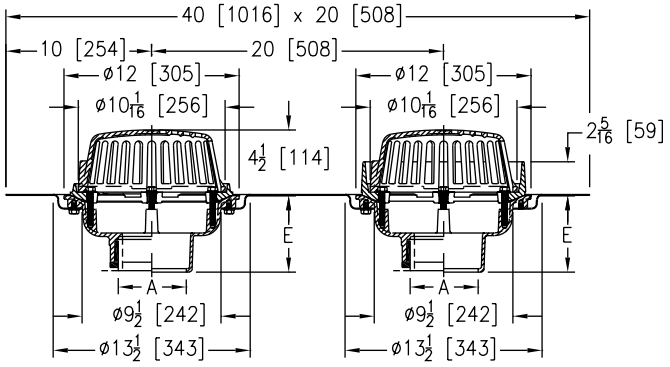

PREFIXES	DESCRIPTION	PIPE SIZE	LIST PRICE
Z164*	D.C.C.I. Body with 4-1/4″ Dome	2″, 3″, 4″, 6″	1,938.00
ZA164	D.C.C.I. Body with 6-9/16″ Aluminum Dome	2″, 3″, 4″, 6″	2,117.00

OUTLETS (SPECIFY PIPE SIZE IN INCHES AND TYPE OF OUTLET)

OUTLET TYPE		OUTLET DESIGNATION (PIPE SIZE/OUTLET TYPE)	E BODY HT. DIM.	ADD
IC	Inside Caulk	2IC, 3IC, 4IC, 6IC	5-1/4″	N/C
IP	Threaded	2IP, 3IP, 4IP, 6IP	3-3/4″	157.00
NH	No-Hub	2NH, 3NH, 4NH, 6NH	5-1/4″	N/C
NL	Neo-Loc (not recommended for roof drains)	2NL, 3NL, 4NL	4-5/8″	N/C

SUFFIXES			ADD
–AR	Acid Resistant Epoxy Coated Finish		2,031.00
–E	Static Extension 1″ thru 4″	D.C.C.I.	344.00
		Galv.	654.00
	For Each Additional 1″ above 4″ - Per Inch (Specify Height)	D.C.C.I.	173.00
		Galv.	326.00
–G	Galvanized Cast Iron		789.00
–SC	Secondary Clamping Collar		366.00
–SS	Stainless Steel Mesh Screen Over Dome		934.00
–TC	Neo-Loc Test Cap Gasket (2″, 3″, 4″ NL Bottom Outlet Only)		47.00
–VP	Vandal-Proof Secured Top		228.00
–XJ	Vertical Expansion Joint (See Z190)		–
–84	Stainless Steel Perforated Gravel Guard 1″ thru 4″		1,566.00
	For Each Additional 1″ above 4″ - Per Inch (Specify Height)		72.00
–85	Stainless Steel Perforated Extension 1″ thru 4″		1,577.00
	For Each Additional 1″ above 4″ - Per Inch (Specify Height)		72.00

BEST SELLERS	LIST PRICE
Z164-3NH	1,938.00
Z164-3NH-SC	2,304.00
Z164-3NH-VP	2,166.00
ZA164-3NH-G	2,906.00
Z164-3NL	1,938.00
Z164-4NH	1,938.00
Z164-4NH-E4	2,282.00
Z164-4NH-VP	2,166.00
Z164-4NL	1,938.00
Z164-6NH	1,938.00
Z164-6NH-SC	2,304.00

**Regularly furnished unless otherwise specified.*

Items designated as Best Sellers are most specified and are generally in stock for shipment.

This symbol denotes a product that is engineered to reduce installation and rework time.

For additional product information, please visit www.zurn.com.

Z165 8-3/8″ DIAMETER COMBINATION MAIN ROOF AND OVERFLOW DRAIN WITH LOW SILHOUETTE DOMES AND DOUBLE TOP-SET® DECK PLATE

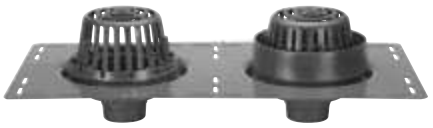

PATENTED

ENGINEERING SPECIFICATION

Zurn Z165 8-3/8″ diameter roof drain and overflow drain feature Dura-Coated cast iron bodies with combination membrane flashing clamp/gravel guards, double Top-Set® deck plate, and low silhouette cast iron domes.

A Pipe Size inches [mm]	Dome Open Area sq in [cm²]	Approximate Weight lb [kg]
2 [51], 3 [76], 4 [102]	43 [277]	36 [16]

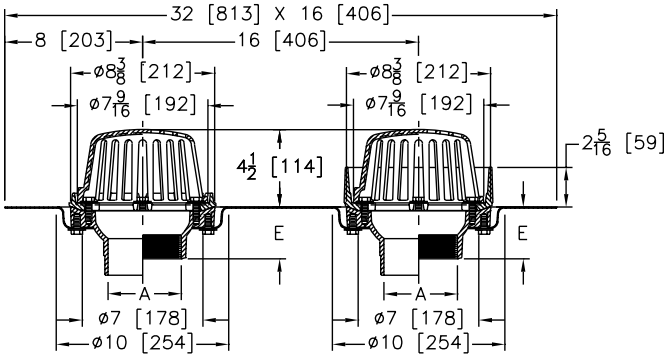

PREFIXES	DESCRIPTION	PIPE SIZE		LIST PRICE
Z165*	D.C.C.I. Body with 4-1/4″ Dome	2″, 3″, 4″		1,743.00
ZA165	D.C.C.I. Body with 4-1/4″ Aluminum Dome	2″, 3″, 4″		1,928.00
OUTLETS (SPECIFY PIPE SIZE IN INCHES AND TYPE OF OUTLET)				
OUTLET TYPE		**OUTLET DESIGNATION (PIPE SIZE/OUTLET TYPE)**	**E BODY HT. DIM.**	**ADD**
IC	Inside Caulk	2IC, 3IC, 4IC	3-7/8″	N/C
IP	Threaded	2IP	2-7/16″	157.00
		3IP	2-3/4″	157.00
		4IP	3″	157.00
NH	No-Hub	2NH, 3NH, 4NH	4″	N/C
NL	Neo-Loc (not recommended for roof drains)	2NL, 3NL, 4NL	3-13/16″	N/C
SUFFIXES				**ADD**
–AR	Acid Resistant Epoxy Coated Finish			1,521.00
–E	Static Extension 1″ thru 4″		D.C.C.I.	344.00
			Galv.	654.00
	For Each Additional 1″ above 4″ - Per Inch (Specify Height)		D.C.C.I.	173.00
			Galv.	326.00
–G	Galvanized Cast Iron			399.00
–SC	Secondary Clamping Collar			382.00
–SS	Stainless Steel Mesh Screen Over Dome			704.00
–TC	Neo-Loc Test Cap Gasket (2″, 3″, 4″ NL Bottom Outlet Only)			47.00
–VP	Vandal-Proof Secured Top			228.00
–XJ	Vertical Expansion Joint (See Z190) (Use with IP Outlets Only)			–
–84	Stainless Steel Perforated Gravel Guard 1″ thru 4″			1,566.00
	For Each Additional 1″ above 4″ - Per Inch (Specify Height)			72.00
–85	Stainless Steel Perforated Extension 1″ thru 4″			1,577.00
	For Each Additional 1″ above 4″ - Per Inch (Specify Height)			72.00
BEST SELLERS				**LIST PRICE**
Z165-2NH				1,743.00
Z165-3NH				1,743.00
Z165-3NL				1,743.00
Z165-4NH				1,743.00
Z165-4NL				1,743.00

Z180 4-1/2″ DIAMETER CORNICE DRAIN WITH BOTTOM OUTLET

ENGINEERING SPECIFICATION

Zurn ZRB180 4-1/2″ diameter by 2″ high cornice drain features Dura-Coated cast iron body, plain bronze dome, and membrane flashing clamp.

A Pipe Size inches [mm]	Dome Open Area sq in [cm²]	Approximate Weight lb [kg]
2 [51], 3 [76]	4.5 [29]	5 [2]

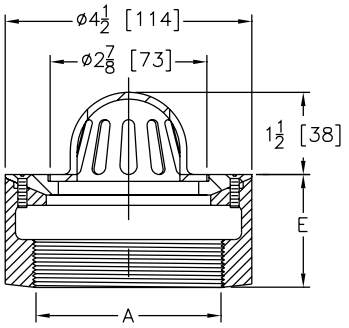

PREFIXES	DESCRIPTION	PIPE SIZE	LIST PRICE
ZRB180*	D.C.C.I. Body with Plain Bronze Dome	2″, 3″	417.00
ZN180	D.C.C.I. Body with Polished Nickel Bronze Dome	2″, 3″	622.00
OUTLETS (SPECIFY PIPE SIZE IN INCHES AND TYPE OF OUTLET)			
OUTLET TYPE		**OUTLET DESIGNATION (PIPE SIZE/OUTLET TYPE)**	**E BODY HT. DIM.**	**ADD**
IP	Threaded	2IP, 3IP	2″	N/C
NH	No-Hub (IP w/Z1040)	2NH, 3NH	4-1/2″	N/C
SUFFIXES				**ADD**
–FS	Flat Strainer (ZN)			N/C
–G	Galvanized Cast Iron			158.00
–VP	Vandal-Proof Secured Top			58.00

For additional product information, please visit www.zurn.com.

**Regularly furnished unless otherwise specified.*

Items designated as Best Sellers are most specified and are generally in stock for shipment.

This symbol denotes a product that is engineered to reduce installation and rework time.

Z181 6″ DIAMETER CORNICE DRAIN WITH BOTTOM OUTLET

ENGINEERING SPECIFICATION

Zurn ZRB181 6″ diameter by 2″ high cornice drain features Dura-Coated cast iron body, plain bronze dome, and membrane flashing clamp.

A Pipe Size inches [mm]	Dome Open Area sq in [cm²]	Approximate Weight lb [kg]
3 [76]	11 [71]	6 [3]
4 [102]		7 [3]

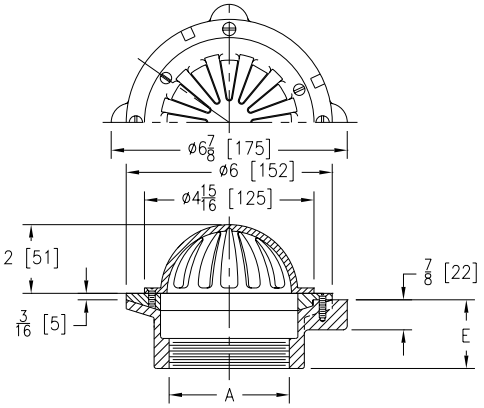

PREFIXES	DESCRIPTION	PIPE SIZE	LIST PRICE
ZRB181*	D.C.C.I. Body with Plain Bronze Dome	3″	791.00
		4″	1,108.00
ZN181	D.C.C.I. Body with Polished Nickel Bronze Dome	3″	994.00
		4″	1,313.00

OUTLETS (SPECIFY PIPE SIZE IN INCHES AND TYPE OF OUTLET)				
OUTLET TYPE		OUTLET DESIGNATION (PIPE SIZE/OUTLET TYPE)	E BODY HT. DIM.	ADD
IP	Threaded	3IP, 4IP	2″	N/C
NH	No-Hub (IP w/Z1040)	3NH, 4NH	4-1/2″	N/C

SUFFIXES			ADD
–BS	Bronze Mesh Screen Over Dome		527.00
–C	Underdeck Clamp		150.00
–FS	Flat Strainer (ZN)		N/C
–G	Galvanized Cast Iron		168.00
–HD	5-3/4″ High Dome	ZRB	84.00
		ZN	109.00
–R	Roof Sump Receiver		257.00
–SS	Stainless Steel Mesh Screen Over Dome		527.00
–VP	Vandal-Proof Secured Top		58.00

BEST SELLERS	LIST PRICE
ZN181-4IP-FS	1,313.00
ZN181-4NH-HD-SS	1,949.00

Z182 4-1/2″ DIAMETER CORNICE DRAIN WITH 90° OUTLET

ENGINEERING SPECIFICATION

Zurn ZRB182 4-1/2″ diameter cornice drain features Dura-Coated cast iron 90° side outlet body, plain bronze dome, and membrane flashing clamp.

A Pipe Size inches [mm]	Dome Open Area sq in [cm²]	Approximate Weight lb [kg]
2 [51]	4.5 [29]	5 [2]

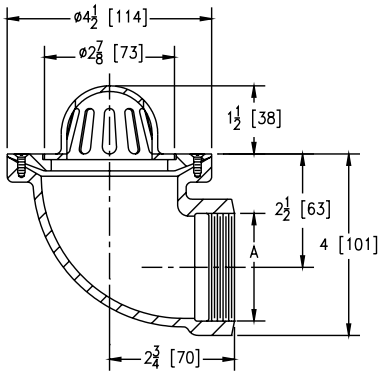

PREFIXES	DESCRIPTION	PIPE SIZE	LIST PRICE
ZRB182*	D.C.C.I. Body with Plain Bronze Dome	2″	531.00
ZN182	D.C.C.I. Body with Polished Nickel Bronze Dome	2″	742.00

OUTLETS (SPECIFY PIPE SIZE IN INCHES AND TYPE OF OUTLET)			
OUTLET TYPE		OUTLET DESIGNATION (PIPE SIZE/OUTLET TYPE)	ADD
IP	Threaded	2IP	N/C

SUFFIXES		ADD
–FS	Flat Strainer (ZN)	N/C
–G	Galvanized Cast Iron	168.00
–VP	Vandal-Proof Secured Top	58.00

**Regularly furnished unless otherwise specified.*

Items designated as Best Sellers are most specified and are generally in stock for shipment.

This symbol denotes a product that is engineered to reduce installation and rework time.

For additional product information, please visit www.zurn.com.

Z185 6″ DIAMETER CORNICE DRAIN WITH 90° OUTLET

ENGINEERING SPECIFICATION

Zurn ZRB185 6″ diameter cornice drain features Dura-Coated cast iron 90° side outlet body, plain bronze dome, and membrane flashing clamp.

A Pipe Size inches [mm]	Dome Open Area sq in [cm²]	Approximate Weight lb [kg]
3 [76]	11 [71]	8 [4]
4 [102]		10 [5]

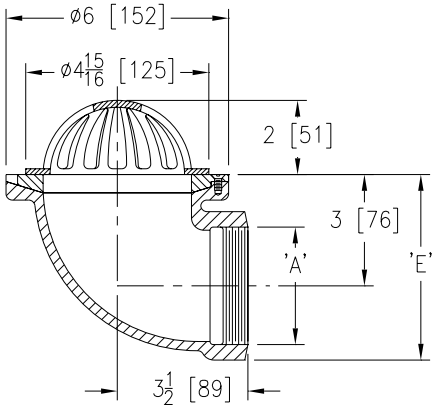

PREFIXES	DESCRIPTION	PIPE SIZE		LIST PRICE
ZRB185*	D.C.C.I. Body with Plain Bronze Dome	3″, 4″		719.00
ZN185	D.C.C.I. Body with Polished Nickel Bronze Dome	3″, 4″		923.00
OUTLETS (SPECIFY PIPE SIZE IN INCHES AND TYPE OF OUTLET)				
OUTLET TYPE		**OUTLET DESIGNATION (PIPE SIZE/OUTLET TYPE)**	**E BODY HT. DIM.**	**ADD**
IP	Threaded	3IP	5-1/8″	N/C
		4IP	5-5/8″	N/C
SUFFIXES				**ADD**
–FS	Flat Strainer (ZN)			N/C
–G	Galvanized Cast Iron			168.00
–HD	5-3/4″ High Dome		ZRB	84.00
			ZN	109.00
–VP	Vandal-Proof Secured Top			58.00
–45	45° Side Outlet Body			N/C
SEE LEGACY ADDENDUM ON PAGE 369 FOR MORE INFORMATION				

Z187 6″ X 7″ OR 8″ X 12″ OBLIQUE SCUPPER DRAIN

ENGINEERING SPECIFICATION

Zurn Z187 6″ x 7″ or 8″ x 12″ scupper drain features Dura-Coated cast iron body with reversible back or bottom outlet, oblique aluminum grate with 90° combination frame, and membrane flashing clamp.

Dimensions in inches [mm]						Approximate Weight lb [kg]
A	B	H	L	M	Grate Open Area sq in[cm²]	
2 [51]	7-1/2 [191]	2-3/4 [70]	6-3/8 [162]	6-11/16 [170]	31 [200]	22 [10]
3 [76]				6-5/32 [156]		20 [9]
4 [102]				5-5/8 [143]		20 [9]
6 [152]	12-1/2 [318]	3-1/2 [89]	8-3/8 [213]	7-3/8 [187]	72 [465]	32 [15]
8 [203]				6-3/8 [162]		33 [15]

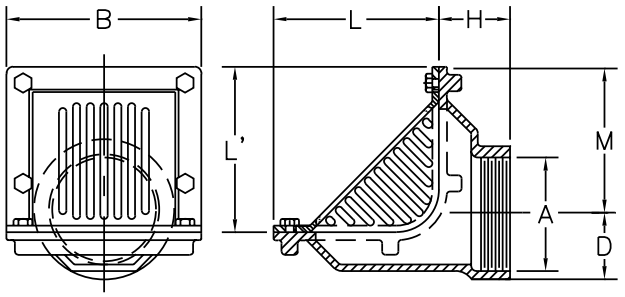

PREFIXES	DESCRIPTION	PIPE SIZE		LIST PRICE
Z187*	D.C.C.I. Body with Grate	2″, 3″, 4″		618.00
		6″, 8″		1,199.00
ZN187	D.C.C.I. Body with Polished Nickel Bronze Grate	2″, 3″, 4″		1,625.00
		6″, 8″		2,205.00
OUTLETS (SPECIFY PIPE SIZE IN INCHES AND TYPE OF OUTLET)				
OUTLET TYPE		**OUTLET DESIGNATION (PIPE SIZE/OUTLET TYPE)**	**E BODY HT. DIM.**	**ADD**
IP	Threaded	2IP, 3IP, 4IP	8-3/16″	N/C
		6IP, 8IP	11″	N/C
SUFFIXES				**ADD**
–BS	Bronze Mesh Screen Over Grate			531.00
–FG	Flush Grate	2″, 3″, 4″	Z, ZN	47.00
		6″, 8″	Z	61.00
			ZN	433.00
–G	Galvanized Cast Iron		2″, 3″, 4″	242.00
			6″, 8″	478.00
–VP	Vandal-Proof Secured Top			58.00

BEST SELLERS	LIST PRICE
Z187-3IP	618.00
Z187-3NH	618.00
Z187-4IP	618.00
Z187-4NH	618.00
Z187-6NH	1,199.00
ZN187-6NH	2,205.00

For additional product information, please visit www.zurn.com.

**Regularly furnished unless otherwise specified.*

Items designated as Best Sellers are most specified and are generally in stock for shipment.

This symbol denotes a product that is engineered to reduce installation and rework time.

Z189 5″ X 6″ X 11″ SCUPPER DRAIN

ENGINEERING SPECIFICATION

Zurn Z189 5″ x 6″ x 11″ scupper drain features Dura-Coated cast iron body with 45° outlet and flush type aluminum strainer with combination aluminum frame and membrane flashing clamp.

A Pipe Size inches [mm]	Grate Open Area sq in [cm²]	Approximate Weight lb [kg]
2 [51]	20 [129]	18 [8]
3 [76]		
4 [102]		

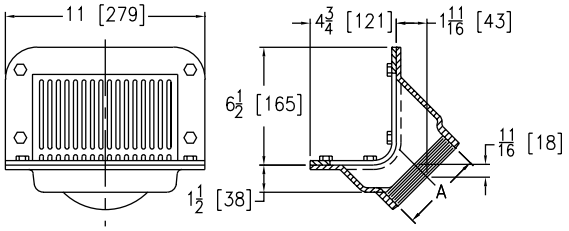

PREFIXES	DESCRIPTION	PIPE SIZE	LIST PRICE
Z189*	D.C.C.I. Body with Aluminum Grate	2″, 3″, 4″	671.00
ZB189	D.C.C.I. Body with Polished Bronze Grate	2″, 3″, 4″	1,358.00
ZN189	D.C.C.I. Body with Polished Nickel Bronze Grate	2″, 3″, 4″	1,672.00
OUTLETS (SPECIFY PIPE SIZE IN INCHES AND TYPE OF OUTLET)			
OUTLET TYPE		**OUTLET DESIGNATION (PIPE SIZE/OUTLET TYPE)**	**ADD**
IP	Threaded	2IP, 3IP, 4IP	N/C
NH	No-Hub (IP w/Z1040)	2NH, 3NH, 4NH	N/C
SUFFIXES			**ADD**
–G	Galvanized Cast Iron		242.00
–TS	Secured Top		58.00
–VP	Vandal-Proof Secured Top		58.00
–90	Threaded Side Outlet Body		N/C
BEST SELLERS			**LIST PRICE**
ZN189-3IP			1,672.00
Z189-4NH			671.00

Z190 VERTICAL EXPANSION JOINT

ENGINEERING SPECIFICATION

Zurn ZRB190 vertical expansion joint features Dura-Coated cast iron body, packing gland, and siliconed bronze sleeve with preformed neoprene packing gasket.

Dimensions in inches [mm]						Approximate Weight lb [kg]
A	B Min.	B Max.	C	D	F	
2 [51]	6-1/2 [165]	8-1/2 [216]	3-5/8 [92]	5 [127]	2-3/4 [70]	8 [4]
3 [76]			4-5/8 [117]		3-1/4 [83]	11 [5]
4 [102]			5-1/2 [140]	4-3/4 [121]	3-3/4 [95]	13 [6]
6 [152]	6-7/8 [175]	8-5/8 [219]	7-7/8 [200]	5 [127]	5 [127]	25 [11]
8 [203]	7-7/8 [200]	10-7/8 [276]	9-7/8 [251]		6 [152]	35 [16]
10 [254]			11-3/4 [298]	6 [152]	6-7/8 [175]	45 [20]

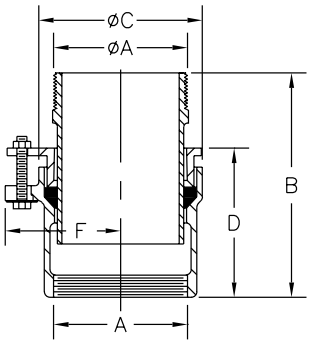

PREFIXES	DESCRIPTION	PIPE SIZE	LIST PRICE
ZRB190*	D.C.C.I. Body with Polished Bronze Sleeve	2″	660.00
		3″	704.00
		4″	798.00
		6″	1,328.00
		8″	2,343.00
		10″	4,875.00

OUTLETS (SPECIFY PIPE SIZE IN INCHES AND TYPE OF OUTLET)				
OUTLET TYPE		**OUTLET DESIGNATION (PIPE SIZE/OUTLET TYPE)**	**'D' BODY HT. DIM.**	**ADD**
IP	Threaded	2IP, 3IP, 4IP, 6IP, 8IP, 10IP	(See Chart)	N/C
NH	No-Hub	2NH, 3NH, 4NH, 6NH, 8NH, 10NH	(See Chart)	N/C
SUFFIXES				**ADD**
–G	Galvanized Cast Iron			180.00
BEST SELLERS				**LIST PRICE**
ZRB190-4NH				798.00
ZRB190-8IP				2,343.00

**Regularly furnished unless otherwise specified.*

Items designated as Best Sellers are most specified and are generally in stock for shipment.

This symbol denotes a product that is engineered to reduce installation and rework time.

For additional product information, please visit www.zurn.com.

Z191 5″ X 4″ X 24″ DOWNSPOUT BOOT

ENGINEERING SPECIFICATION

Zurn Z191 5″ x 4″ x 24″ downspout boot features Dura-Coated cast iron body and strap with 1/4″ diameter cast holes for flat-head bolts.

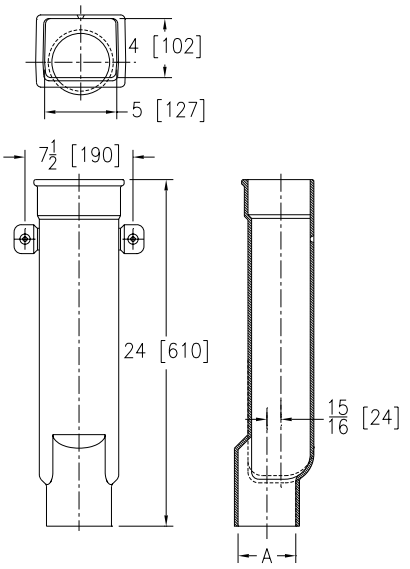

Product Designation	Dimensions in inches [mm]		Approximate Weight lb [kg]
	Size	A	
-24	5 [127] x 4 [102] x 24 [610]	4 [102]	30 [14]

PREFIXES	DESCRIPTION	A PIPE SIZE	LIST PRICE
Z191*	D.C.C.I. Body	4″	**1,314.00**
OUTLETS (SPECIFY PIPE SIZE IN INCHES AND TYPE OF OUTLET)			
OUTLET TYPE		**OUTLET DESIGNATION (PIPE SIZE/OUTLET TYPE)**	**ADD**
NH	No-Hub	4NH	**N/C**
SUFFIXES			**ADD**
–CA	Cleanout Access with Plug		**678.00**
–G	Galvanized Cast Iron		**972.00**
BEST SELLERS			**LIST PRICE**
Z191-24			**1,314.00**
Z191-24-CA			**1,992.00**
Z191-24-G			**2,286.00**

Z191-RD 4″ X 18″ DOWNSPOUT BOOT

ENGINEERING SPECIFICATION

Zurn Z191-RD 4″ x 18″ downspout boot features Dura-Coated cast iron body, round inlet and outlet, and strap with 1/4″ diameter cast holes for flat-head bolts.

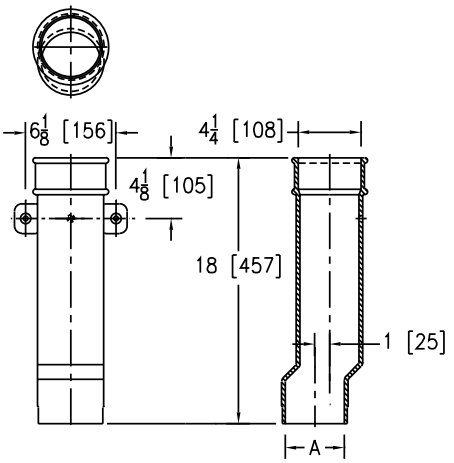

Product Designation	Dimensions in inches [mm]		Approximate Weight lb [kg]
	Size	A	
-18	4 [102] x 18 [457]	4 [102]	20 [9]

PREFIXES	DESCRIPTION	A PIPE SIZE	LIST PRICE
Z191–RD*	D.C.C.I. Body	4″	**911.00**
OUTLETS (SPECIFY PIPE SIZE IN INCHES AND TYPE OF OUTLET)			
OUTLET TYPE		**OUTLET DESIGNATION (PIPE SIZE/OUTLET TYPE)**	**ADD**
NH	No-Hub	4NH	**N/C**
SUFFIXES			**ADD**
–CA	Cleanout Access with Plug		**678.00**
–G	Galvanized Cast Iron		**972.00**
BEST SELLERS			**LIST PRICE**
Z191-RD-18			**911.00**
Z191-RD-18-CA			**1,589.00**

For additional product information, please visit www.zurn.com.

**Regularly furnished unless otherwise specified.*
Items designated as Best Sellers are most specified and are generally in stock for shipment.
This symbol denotes a product that is engineered to reduce installation and rework time.

Z192 4″ X 3″ DOWNSPOUT BOOT

ENGINEERING SPECIFICATION

Zurn Z192 4″ x 3″ downspout boot features Dura-Coated cast iron body and strap with 1/4″ diameter cast holes for flat head bolts.

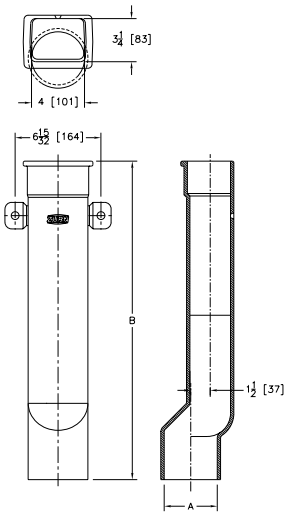

Product Designation	Dimensions in inches [mm]			Approximate Weight lb [kg]
	Size	A	B	
-12	4 [102] x 3 [76] x 12 [305]	4 [102]	12 [305]	14 [6]
-18	4 [102] x 3 [76] x 18 [457]		18 [457]	20 [9]
-24	4 [102] x 3 [76] x 24 [610]		24 [610]	27 [12]

PREFIXES	DESCRIPTION	PRODUCT DESIGNATION	LIST PRICE
Z192*	D.C.C.I. Body	-12	626.00
		-18	824.00
		-24	1,471.00
OUTLETS (SPECIFY PIPE SIZE IN INCHES AND TYPE OF OUTLET)			
OUTLET TYPE		**OUTLET DESIGNATION (PIPE SIZE/OUTLET TYPE)**	**ADD**
NH	No Hub	4NH	N/C
SUFFIXES			**ADD**
–CA	Cleanout Access with Plug		678.00
–G	Galvanized Cast Iron		527.00

BEST SELLERS	LIST PRICE
Z192-12	626.00
Z192-12-CA	1,304.00
Z192-18	824.00
Z192-18-CA	1,502.00
Z192-24	1,471.00
Z192-24-CA	2,149.00

Z193 VANDAL-PROOF HOODED VENT CAP

ENGINEERING SPECIFICATION

Zurn Z193 vandal-proof vent cap features Dura-Coated cast iron body and hooded dome cap, vandal-proof securing device.

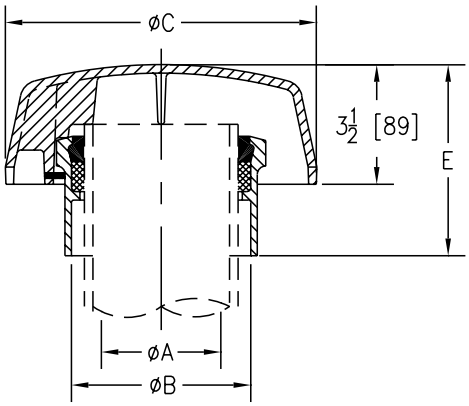

Dimensions in inches [mm]			Open Area Sq.	Approximate Weight lb [kg]
A	B	C		
1-1/2 [38], 2 [51]	3-1/8 [79]	6-3/8 [162]	2 : 1	9 [4]
3 [76]	4-3/16 [106]	7-5/8 [194]		12 [5]
4 [102]	5-1/4 [133]	9-1/8 [232]		14 [6]
5 [127]	6-3/16 [157]	10-1/8 [257]		16 [7]
6 [152]	7-3/16 [183]	11-5/8 [295]		18 [8]

PREFIXES	DESCRIPTION	PIPE SIZE		LIST PRICE
Z193*	D.C.C.I. Body and Dome Cap	1-1/2″, 2″		417.00
		3″		472.00
		4″		527.00
		5″		618.00
		6″		673.00
OUTLETS (SPECIFY PIPE SIZE IN INCHES AND TYPE OF OUTLET)				
OUTLET TYPE		**OUTLET DESIGNATION (PIPE SIZE/OUTLET TYPE)**	**E BODY HT. DIM.**	**ADD**
IC	Inside Caulk	1.5IC, 2IC	5-11/16″	N/C
		3IC, 4IC, 5IC, 6IC	5-9/16″	N/C
SUFFIXES				**ADD**
–G	Galvanized Cast Iron			171.00

BEST SELLERS	LIST PRICE
Z193-2IC	417.00
Z193-3IC	472.00
Z193-4IC	527.00

**Regularly furnished unless otherwise specified.*

Items designated as Best Sellers are most specified and are generally in stock for shipment.

This symbol denotes a product that is engineered to reduce installation and rework time.

For additional product information, please visit www.zurn.com.

Z195 VENT STACK FLASHING SLEEVE

ENGINEERING SPECIFICATION

Zurn Z195 vent stack flashing sleeve features Dura-Coated cast iron body with fixed position combination membrane flashing flange and clamp.

Dimensions in inches [mm]				Approximate Weight lb [kg]
A	C	D	K	
2 [51]	6-1/2 [165]	3-1/8 [79]	3 [76]	11 [5]
3 [76]	8-1/2 [216]	4-1/4 [108]	3-1/8 [79]	13 [6]
4 [102]		5-1/4 [133]		18 [8]
5 [127]	9-1/2 [241]	6-1/2 [165]	2-1/2 [64]	20 [9]
6 [152]	10-1/2 [267]	7-1/2 [191]	3-1/8 [79]	26 [12]
8 [203]	14-1/2 [368]	9-3/4 [248]	2-3/4 [70]	52 [24]

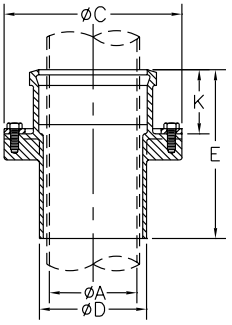

PREFIXES	DESCRIPTION	PIPE SIZE		LIST PRICE
Z195*	D.C.C.I. Body	2″		326.00
		3″, 4″		531.00
		5″, 6″		970.00
		8″		1,128.00
OUTLETS (SPECIFY PIPE SIZE IN INCHES AND TYPE OF OUTLET)				
OUTLET TYPE		**OUTLET DESIGNATION (PIPE SIZE/OUTLET TYPE)**	**E BODY HT. DIM.**	**ADD**
IC	Inside Caulk	2IC	8″	N/C
		3IC, 4IC, 6IC	8-1/8″	N/C
		5IC	8-1/2″	N/C
		8IC	8-3/4″	N/C
SUFFIXES				**ADD**
–CF	Bottom Clamping Flange	D.C.	2″ thru 6″	142.00
			8″	267.00
		Galv.	2″ thru 6″	200.00
			8″	365.00
–G	Galvanized Cast Iron			266.00
SEE LEGACY ADDENDUM ON PAGE 369 FOR MORE INFORMATION				

Z196 VENT STACK FLASHING SLEEVE

ENGINEERING SPECIFICATION

Zurn Z196 vent stack flashing sleeve features Dura-Coated cast iron body, inside caulk type.

Dimensions in inches [mm]		Approximate Weight lb [kg]
A	B	
1-1/2 [38]	3 [76]	2 [10]
2 [51]	3-1/2 [89]	3 [1]
3 [76]	4-3/4 [121]	4 [2]
4 [102]	5-5/8 [143]	
6 [152]	7-3/4 [197]	7 [3]

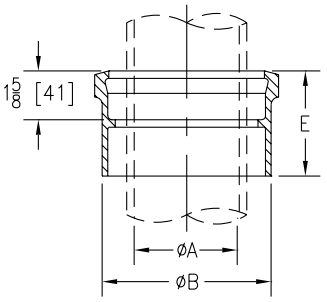

PREFIXES	DESCRIPTION	PIPE SIZE		LIST PRICE
Z196*	D.C.C.I. Body	1-1/2″, 2″		62.00
		3″		206.00
		4″		125.00
		6″		318.00
OUTLETS (SPECIFY PIPE SIZE IN INCHES AND TYPE OF OUTLET)				
OUTLET TYPE		**OUTLET DESIGNATION (PIPE SIZE/OUTLET TYPE)**	**E BODY HT. DIM.**	**ADD**
IC	Inside Caulk	1.5C, 2IC, 3IC, 4IC, 6IC	3-1/2″	N/C
SUFFIXES				**ADD**
–G	Galvanized Cast Iron			81.00
SEE LEGACY ADDENDUM ON PAGE 369 FOR MORE INFORMATION				

For additional product information, please visit www.zurn.com.

**Regularly furnished unless otherwise specified.*

Items designated as Best Sellers are most specified and are generally in stock for shipment.

This symbol denotes a product that is engineered to reduce installation and rework time.

Z197 RISER SLEEVE

ENGINEERING SPECIFICATION

Zurn Z197 riser sleeve features Dura-Coated cast iron body, double threaded pipe connector with combination membrane flashing flange. (Pipe sleeve furnished by others.)

Dimensions in inches [mm]					Approximate Weight lb [kg]
A	B	C	D	E	
1-1/2 [38]	2-1/2 [64]	6-1/2 [165]	4 [102]	2-3/4 [70]	6 [3]
2 [51]	3 [76]				7 [3]
3 [76]	4 [102]				9 [4]
4 [102]	5 [127]	8-1/2 [216]	6 [152]	3-1/4 [83]	10 [5]
5 [127]	6 [152]	9-1/2 [241]	7-1/8 [181]	3-3/8 [86]	13 [6]
6 [152]	8 [203]	11-7/8 [302]	9-3/8 [238]	3-5/8 [92]	19 [9]

PREFIXES	DESCRIPTION	PIPE SIZE	LIST PRICE
Z197*	D.C.C.I. Body	1-1/2″	420.00
		2″, 3″	442.00
		4″	615.00
		5″	626.00
		6″	889.00
OUTLETS (SPECIFY PIPE SIZE IN INCHES AND TYPE OF OUTLET)			
OUTLET TYPE		OUTLET DESIGNATION (PIPE SIZE/OUTLET TYPE)	ADD
IP	Threaded	1.5IP, 2IP, 3IP, 4IP, 5IP, 6IP	N/C
SUFFIXES			ADD
–G	Galvanized Cast Iron		250.00
SEE LEGACY ADDENDUM ON PAGE 369 FOR MORE INFORMATION			

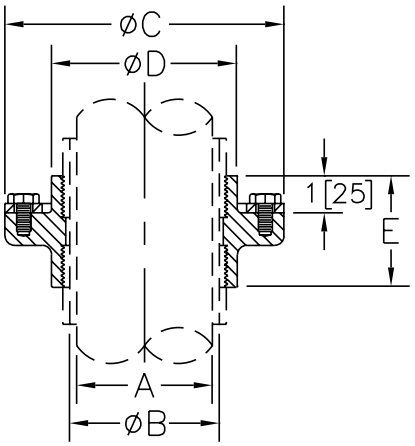

Z198 PARAPET SCUPPER SLEEVE

ENGINEERING SPECIFICATION

Zurn Z198 parapet scupper sleeve features Dura-Coated cast iron body with fixed position combination membrane flashing flange and clamp and parapet wall face closing.

Product Designation	Dimensions in inches [mm]		Approximate Weight lb [kg]
	A Pipe Size	B Wall Thickness	
-8	4 [102]	8-1/2 [216]	26 [12]
-11		11 [279]	29 [13]
-13		13-1/2 [343]	31 [14]
-17		17-1/2 [445]	35 [16]
-22		22-1/2 [572]	40 [18]

PREFIXES	DESCRIPTION	PRODUCT DESIGNATION	LIST PRICE
Z198*	D.C.C.I. Body	-8, -11	937.00
		-13	2,028.00
		-17	1,313.00
		-22	1,403.00
OUTLETS (SPECIFY PIPE SIZE IN INCHES AND TYPE OF OUTLET)			
OUTLET TYPE		OUTLET DESIGNATION (PIPE SIZE/OUTLET TYPE)	ADD
HB	Hub	4HB	N/C
SUFFIXES			ADD
–G	Galvanized Cast Iron		233.00
SEE LEGACY ADDENDUM ON PAGE 369 FOR MORE INFORMATION			

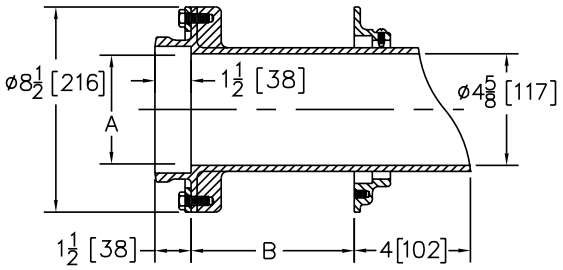

*Regularly furnished unless otherwise specified.

Items designated as Best Sellers are most specified and are generally in stock for shipment.

This symbol denotes a product that is engineered to reduce installation and rework time.

For additional product information, please visit www.zurn.com.

Z199 DOWNSPOUT NOZZLE

ENGINEERING SPECIFICATION

Zurn ZANB199 downspout nozzle features all nickel bronze body, optional threaded or no-hub inlet and decorative face of wall flange and outlet nozzle.

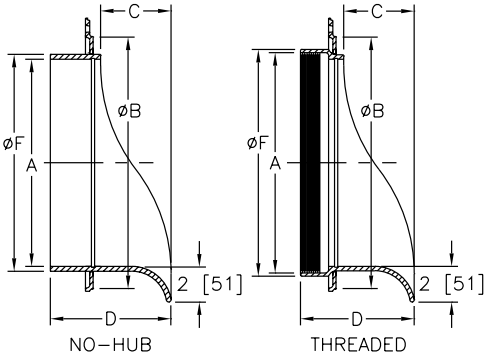

PREFIXES	DESCRIPTION	PIPE SIZE	LIST PRICE
ZANB199*	All Nickel Bronze Body	2″, 3″, 4″	1,078.00
		5″, 6″	1,938.00
		8″	2,651.00
		10″	3,463.00
		12″	4,286.00
ZAB199	All Polished Bronze Body	2″, 3″, 4″	973.00
		5″, 6″	1,746.00
		8″	2,554.00
		10″	3,318.00
		12″	4,107.00
ZARB199	All Plain Bronze Body	2″, 3″, 4″	630.00
		5″, 6″	1,492.00
		8″	2,259.00
		10″	2,933.00
		12″	3,691.00

OUTLETS (SPECIFY PIPE SIZE IN INCHES AND TYPE OF OUTLET)			
OUTLET TYPE		OUTLET DESIGNATION (PIPE SIZE/OUTLET TYPE)	ADD
IP	Threaded	2IP, 3IP, 4IP, 5IP, 6IP, 8IP, 10IP, 12IP	N/C
PVC	IP Threaded	2PVC, 3PVC, 4PVC, 5PVC, 6PVC, 8PVC, 10PVC, 12PVC	N/C
NH	No-Hub	2NH, 3NH, 4NH, 5NH, 6NH, 8NH, 10NH, 12NH	N/C
SUFFIXES			ADD
–SS	Removable Stainless Screen		552.00

Dimensions in inches [mm]							Approximate Weight lb [kg]
			D		F		
A	B	C	IP/PVC	NH	IP/PVC	NH	
2 [51]	4-1/2 [114]	2-5/8 [67]	4-1/2 [114]	4-1/2 [114]	2-13/16 [71]	2-3/8 [60]	5 [2]
3 [76]	5-1/2 [140]	2-5/8 [67]			3-15/16 [100]	3-3/8 [86]	6 [3]
4 [102]	6-5/8 [168]	2-43/64 [68]			4-15/16 [125]	4-3/8 [111]	7 [3]
5 [127]	7-5/8 [194]	3-1/16 [78]	4-59/64 [125]	5-15/32 [139]	6-1/16 [154]	5-5/16 [135]	12 [5]
6 [152]	8-5/8 [219]	3-3/32 [79]			7-1/8 [181]	6-5/16 [160]	13 [6]
8 [203]	10-5/8 [270]	2-31/32 [75]		5-25/32 [147]	9-1/8 [232]	8-3/8 [213]	14 [6]
10 [254]	12-5/8 [321]	3-1/2 [89]	5-53/64 [148]	6-5/16 [160]	11-5/32 [283]	10-9/16 [268]	15 [7]
12 [305]	14-5/8 [371]	4-5/64 [104]	6-13/32 [163]	6-57/64 [175]	13-5/32 [334]	12-1/2 [318]	18 [8]

BEST SELLERS	LIST PRICE
ZAB199-2NH	973.00
ZAB199-3IP	973.00
ZAB199-4IP-SS	1,525.00
ZAB199-4NH	973.00
ZAB199-6IP	1,746.00
ZAB199-6NH-SS	2,298.00
ZAB199-8IP-SS	3,106.00
ZAB199-8NH-SS	3,106.00
ZANB199-10IP	3,463.00
ZANB199-10NH	3,463.00
ZANB199-10-PVC	3,463.00
ZANB199-12NH	4,286.00
ZANB199-2IP	1,078.00
ZANB199-3IP	1,078.00
ZANB199-3NH-SS	1,630.00
ZANB199-3-PVC	1,078.00
ZANB199-4IP	1,078.00
ZANB199-4IP-SS	1,630.00
ZANB199-4NH-SS	1,630.00
ZANB199-4-PVC	1,078.00
ZANB199-6IP	1,938.00

BEST SELLERS	LIST PRICE
ZANB199-6NH	1,938.00
ZANB199-6NH-SS	2,490.00
ZANB199-6-PVC	1,938.00
ZANB199-8IP	2,651.00
ZANB199-8IP-SS	3,203.00
ZANB199-8NH	2,651.00
ZANB199-8-PVC	2,651.00
ZARB199-10NH	2,933.00
ZARB199-12NH-SS	4,243.00
ZARB199-12-PVC	3,691.00
ZARB199-2IP	630.00
ZARB199-3IP	1,182.00
ZARB199-3NH-SS	1,182.00
ZARB199-3-PVC	1,182.00
ZARB199-4IP	630.00
ZARB199-4IP-SS	1,182.00
ZARB199-4-PVC	630.00
ZARB199-4-PVC-SS	1,182.00
ZARB199-5IP	1,492.00
ZARB199-6IP	1,492.00
ZARB199-6-PVC	1,492.00

For additional product information, please visit www.zurn.com.

**Regularly furnished unless otherwise specified.*

Items designated as Best Sellers are most specified and are generally in stock for shipment.

This symbol denotes a product that is engineered to reduce installation and rework time.

Z199-DC DOWNSPOUT COVER

ENGINEERING SPECIFICATION

Zurn ZS199-DC downspout cover features round fabricated stainless steel frame with fabricated, secured, perforated, stainless steel hinged strainer.

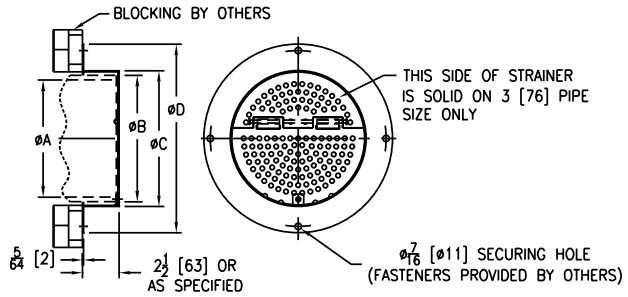

PREFIXES	DESCRIPTION	PIPE SIZE	LIST PRICE
ZS199–DC*	Type 304 Stainless Steel	3″	2,908.00
		4″	2,908.00
		6″	3,068.00
		8″	3,220.00
		10″	3,407.00
		12″	3,610.00
		15″	3,817.00

SUFFIXES			ADD
–CP	Chrome Plated		514.00
–VP	Vandal Proof Secured Top		150.00
–5	5″ Long Downspout Frame	3″	N/C
		4″	N/C
		6″	5,000.00
		8″	6,000.00
		10″	6,000.00
		12″	6,000.00
		15″	6,000.00

BEST SELLERS	LIST PRICE
ZS199-3-DC	2,908.00
ZS199-4-DC	2,908.00
ZS199-6-DC	3,068.00
ZS199-10-DC	3,407.00
ZS199-12-DC	3,610.00

Dimensions in inches [mm]				Strainer Open Area sq in [cm²]
A	B	C	D	
3 [76]	3-1/2 [89]	4-1/4 [108]	7-7/8 [200]	1-1/2 [9.7]
4 [102]	4-1/2 [114]	5-5/32 [131]	8-3/4 [222]	3-5/16 [21]
6 [152]	6-5/8 [168]	7-1/4 [184]	10-7/8 [276]	5-1/2 [35]
8 [203]	8-5/8 [219]	9-1/4 [235]	12-7/8 [327]	10-5/16 [67]
10 [254]	10-3/4 [273]	11-3/8 [289]	15 [381]	17-13/16 [50]
12 [305]	12-3/4 [324]	13-3/8 [340]	17 [432]	27 [174]
15 [381]	15-7/8 [403]	16-1/2 [419]	20-1/8 [511]	43-5/16 [279]

**Regularly furnished unless otherwise specified.*

Items designated as Best Sellers are most specified and are generally in stock for shipment.

This symbol denotes a product that is engineered to reduce installation and rework time.

For additional product information, please visit www.zurn.com.

NOTES

FLOOR DRAINS

FLOOR DRAINS - GENERAL INFORMATION 61
FLOOR DRAINS - APPLICATION INDEX 61
CAST IRON EZ1™ NOMENCLATURE DECODER 62
Z300 THOROFLUSH DRAIN 63
Z310 THOROFLUSH DRAIN 63
Z315 VANDAL-PROOF ACCESS DRAIN 64
Z319 THOROFLUSH DRAIN – LARGE CAPACITY 64
Z320 REFRIGERATOR DRAIN 65
Z325 INDIRECT WASTE FUNNEL WITH INTEGRAL BACKWATER VALVE 65
Z326 INDIRECT WASTE FUNNEL 66
Z328 FUNNEL CONVERTING ASSEMBLY 66
Z329 FUNNEL CONVERTING ASSEMBLY 67
Z349 TERRACE PLANTING AREA DRAIN 68
Z350 PLANTING AREA DRAIN 68
Z355 PRISON CELL FLOOR DRAIN 69
Z400 "TYPE B" ROUND STRAINER WITH HEEL-PROOF SQUARE OPENINGS 69
ZS400 "TYPE BS" ROUND STRAINER WITH SLOTTED OPENINGS 70
Z400 "TYPE BL" ROUND STRAINER WITH DEX-O-TEX FLANGE 70
Z400 "TYPE BZ" ROUND LEVELING STRAINER WITH SQUARE OPENINGS 71
Z400 "TYPE C" ROUND HINGED STRAINER 71
Z400 "TYPE D" ROUND STRAINER WITH SOLID HINGED COVER 72
Z400 "TYPE E" ROUND STRAINER WITH INTEGRAL FUNNEL 72
Z400 "TYPE G" ROUND STRAINER WITH DOME 72
Z400 "TYPE H" ROUND STRAINER WITH CLAMP DEVICE 73
Z400 "TYPE I" ROUND STRAINER WITH RAISED LIP 73
Z400 "TYPE J" RECTANGULAR STRAINER WITH HEEL-PROOF SLOTTED OPENINGS 74
Z400 "TYPE K" ANGULAR STRAINER 74
Z400 "TYPE M" ROUND STRAINER WITH SLOTTED OPENINGS AND SUR-SET BUCKET 75
Z400 "TYPE N" ROUND STRAINER WITH DEEP FLANGED GRATE 75
Z400 "TYPE S" SQUARE STRAINER 76
ZS400 "TYPE SS" SQUARE STRAINER 76
Z400 "TYPE SC" SQUARE STRAINER WITH SOLID HINGED COVER 77
Z400 "TYPE SH" SQUARE HINGED STRAINER 77
Z400 "TYPE SL" SQUARE STRAINER WITH DEX-O-TEX FLANGE 77
Z400 "TYPE SZ" SQUARE LEVELING STRAINER WITH SLOTTED OPENINGS 78
Z400-SR FLOOR DRAIN STABILIZER RING 79
Z400-U ADJUSTABLE STRAINER EXTENSION 79
Z400-18 LEVELING RING 79
Z499B ROUND PROTECTIVE COVER FOR FLOOR DRAINS 80
Z499S SQUARE PROTECTIVE COVER FOR FLOOR DRAINS 80
Z415-BZ1 BODY ASSEMBLY W/ "TYPE B" STRAINER AND EZ1™ TECHNOLOGY 81
Z415-SZ1 BODY ASSEMBLY W/ "TYPE S" STRAINER AND EZ1™ TECHNOLOGY 82
Z415-BZ1-DP BODY ASSEMBLY W/ "TYPE B" STRAINER, DECK PLATE AND EZ1™ TECHNOLOGY 83
Z415-SZ1-DP BODY ASSEMBLY W/ "TYPE S" STRAINER, DECK PLATE AND EZ1™ TECHNOLOGY 84
Z415B-DP BODY ASSEMBLY W/ "TYPE B" STRAINER AND DECK PLATE 85
Z415S-DP BODY ASSEMBLY W/ "TYPE S" STRAINER AND DECK PLATE 86
Z415 BODY ASSEMBLY WITH HEEL-PROOF "TYPE B" STRAINER 87
ZS415 BODY ASSEMBLY WITH "TYPE BS" STRAINER 88
Z415 BODY ASSEMBLY WITH "TYPE BL" STRAINER 89
Z415 BODY ASSEMBLY WITH "TYPE BZ" LEVELING STRAINER 90
Z415 BODY ASSEMBLY WITH "TYPE C" STRAINER 91
Z415 BODY ASSEMBLY WITH "TYPE D" STRAINER 92
Z415 BODY ASSEMBLY WITH "TYPE E" STRAINER 93
Z415 BODY ASSEMBLY WITH "TYPE G" STRAINER 94
Z415 BODY ASSEMBLY WITH "TYPE H" STRAINER 95
Z415 BODY ASSEMBLY WITH "TYPE I" STRAINER 96
Z415 BODY ASSEMBLY WITH "TYPE J" HEEL-PROOF STRAINER 97
Z415 BODY ASSEMBLY WITH "TYPE K" STRAINER 98
Z415 BODY ASSEMBLY WITH "TYPE M" STRAINER AND SUR-SET BUCKET 99
Z415 BODY ASSEMBLY WITH "TYPE N" STRAINER 100
Z415 BODY ASSEMBLY WITH "TYPE S" STRAINER 101
ZS415 BODY ASSEMBLY WITH "TYPE SS" STRAINER 102
Z415 BODY ASSEMBLY WITH "TYPE SC" STRAINER 103
Z415 BODY ASSEMBLY WITH "TYPE SH" STRAINER 104
Z415 BODY ASSEMBLY WITH "TYPE SL" STRAINER 105
Z415 BODY ASSEMBLY WITH "TYPE SZ" LEVELING STRAINER 106
Z420 DEEP SHANK FLOOR AND SHOWER DRAIN FOR MARBLE AND GRANITE APPLICATIONS 107
Z450 DRUM TRAP DRAIN WITH "TYPE B" STRAINER 108
Z451 SHALLOW TRAP DRAIN WITH "TYPE B" STRAINER 109
Z453 DEEP SEAL TRAP DRAIN WITH "TYPE B" STRAINER 110
Z455 TRAP DRAIN WITH FLOOR CLEANOUT WITH "TYPE B" STRAINER 111
Z456 DEEP SEAL TRAP DRAIN WITH FLOOR CLEANOUT AND CLAMP COLLAR WITH "TYPE B" STRAINER 112
Z460B SHALLOW BODY FLOOR DRAIN WITH SIDE OUTLET AND "TYPE B" STRAINER 113

Z461 6" SQUARE MODULAR NON-ADJUSTABLE FLOOR DRAIN WITH CLAMPING FRAME **114**
Z503 15" HEAVY-DUTY AREA DRAIN **114**
Z505 12" HEAVY-DUTY DRAIN **115**
Z507 7" MEDIUM-DUTY DRAIN **116**
Z508 9" EXTRA-HEAVY-DUTY DRAIN **117**
Z509 12" HEAVY-DUTY DRAIN **118**
Z511 9" HEAVY-DUTY DRAIN **119**
Z512 12-1/4" HEAVY-DUTY DRAIN **120**
Z513 9" SQUARE HINGED HEAVY-DUTY DRAIN **121**
Z520 9" ADJUSTABLE HEAVY-DUTY DRAIN **122**
Z521 12" DIAMETER ADJUSTABLE HEAVY-DUTY DRAIN **123**
Z526 12" ADJUSTABLE HEAVY-DUTY DRAIN **124**
Z530 9" MEDIUM-DUTY WIDE FLANGE DECK DRAIN **125**
Z531 9" ADJUSTABLE FRAME WIDE FLANGE MEDIUM-DUTY DECK DRAIN **125**
Z532 12-1/4" DIAMETER WIDE FLANGE HEAVY-DUTY FLOOR DRAIN **126**
Z533 9" DIAMETER HEAVY-DUTY PARKING DECK DRAIN WITH SUPPORT FLANGE **126**
Z534 12-1/4" DIAMETER HEAVY-DUTY PARKING DECK DRAIN WITH SUPPORT FLANGE **127**
Z535 HEAVY-DUTY PARKING STRUCTURE DRAIN **127**
Z536 15-3/8" DIAMETER HEAVY-DUTY PARKING DECK DRAIN WITH SUPPORT FLANGE **128**
Z537 15-7/8" SQUARE TOP HEAVY-DUTY PARKING DECK DRAIN WITH SUPPORT FLANGE **129**
Z539 12-1/4" HEAVY-DUTY DRAIN WITH DEEP SUMP **129**
Z540 12-1/4" MEDIUM-DUTY DRAIN WITH SUR-SET BUCKET **130**
Z541 12-1/4" DIAMETER HEAVY-DUTY DRAIN **131**
Z545 16" DIAMETER HEAVY-DUTY DRAIN **132**
Z546 21-1/2" DIAMETER EXTRA HEAVY-DUTY DRAIN **133**
Z547 21" DIAMETER EXTRA HEAVY-DUTY HEEL-PROOF PARKING DECK DRAIN WITH SUPPORT FLANGE **133**
Z550 9" DIAMETER MEDIUM-DUTY DRAIN **134**
Z551 9" DIAMETER MEDIUM-DUTY DRAIN **135**
Z554 9" MEDIUM-DUTY DRAIN WITH SUR-SET BUCKET **136**
Z556 8" ADJUSTABLE HEAVY-DUTY DRAIN **136**
Z566 12" SQUARE OPEN TOP DRAIN **137**
Z575 6" X 12" MEDIUM-DUTY GUTTER DRAIN **137**
Z587 12-1/4" X 9-1/2" MEDIUM-DUTY DRAIN **138**
Z609 9" SQUARE HEAVY-DUTY DRAIN **138**
Z610 12-1/2" HEAVY-DUTY DRAIN **139**
Z611 9" MEDIUM-DUTY DRAIN **140**
Z624 ISOLATION DECK DRAIN **141**
Z625 ADJUSTABLE ISOLATION DECK DRAIN **141**
Z627 HEAVY-DUTY ADJUSTABLE ISOLATION DECK DRAIN **142**
Z629 VERTICAL WALL DRAIN WITH BACKWATER VALVE **143**
Z645 12-1/2" X 12-1/2" HEAVY-DUTY DRAIN **144**
Z662 16" HEAVY-DUTY DRAIN **145**
Z662-HF 16" HEAVY-DUTY DRAIN WITH HIGH FLOW DUCTILE IRON GRATE **146**
Z664 6" WIDE HEAVY-DUTY MODULAR TRENCH DRAIN **147**
Z665 12" WIDE HEAVY-DUTY MODULAR TRENCH DRAIN **148**
Z667 6" WIDE MEDIUM-DUTY MODULAR TRENCH DRAIN **149**
Z668 11-1/4" X 19-1/4" HEAVY-DUTY DRAIN **149**
Z673 29" X 30" EXTRA HEAVY-DUTY DRAIN **150**
Z675 13-1/2" EXTRA HEAVY-DUTY DRAIN **151**
Z676 13-1/2" EXTRA HEAVY-DUTY DRAIN **151**
Z730 9" TOP MEDIUM-DUTY DRAIN **152**
Z742 LIGHT-DUTY TRAP DRAIN **153**
Z761 12-1/2" X 12-1/2" HEAVY-DUTY DRAIN **154**
VP-DRIVER VANDAL-PROOF DRIVER **154**

FLOOR DRAINS - GENERAL INFORMATION

Zurn floor drains are generally made up of a body, combination frame/clamp collar and top grate. The assemblies shown below illustrate the more common components utilized in floor drains.

Zurn floor drains are available in 2" through 10" outlet sizes (and 12" for specific drains and outlet type) with Inside Caulk, Threaded, No-Hub and Neo-Loc connections.

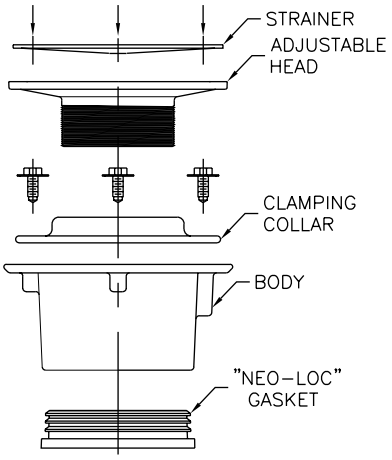

Z415 "Type B" Illustrated

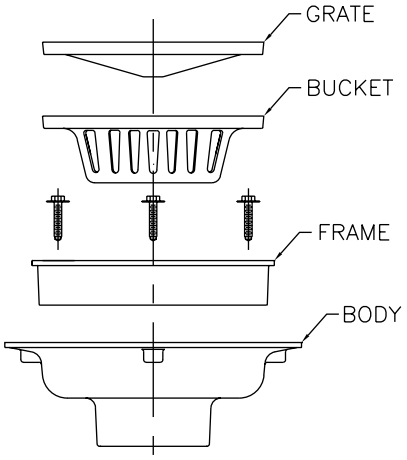

Z541 Illustrated

FLOOR DRAINS - APPLICATION INDEX

The Zurn floor drains below are recommended for the applications listed. Most Zurn floor drains can be readily adapted for use in finished areas by using bronze or nickel bronze grates and strainers. (Use Prefix "ZB" or "ZN" preceding the product number in place of the usual "Z" Prefix.)

APPLICATION	RECOMMENDED FLOOR DRAIN
Automobile Parking Area	Z533, Z534, Z535, Z536, Z537, Z541, Z546, Z547, Z662, Z662-HF, Z761
Basement and Subterranean Areas	Z566, Z730
Boiler House and Maintenance Areas	Z541-90, Z546, Z645, Z761
Clinical, Surgical, Detention Areas	Z300, Z310, Z315, Z319, Z461
Entrances and Concourses	Z587, Z664, Z665, Z667
Finished Area/Gutter	Z460B, Z575
Finished Interior Floor Areas Adjustable	Z415-BZ1, Z415-SZ1, Z415-BZ1-DP, Z415-SZ1-DP, Z415B-DP, Z415S-DP, ZN415, ZS415, ZN450, Z451B, ZN453, ZN455, ZN456, Z460B, Z461
Finished Interior Floor Areas Adjustable with EZ1™ Technology (Post Pour Adjustment)	Z415-BZ1, Z415-SZ1, Z415-BZ1-DP, Z415-SZ1-DP
Food Preparation Areas	Z320, ZN610-SS (Also See Sani-Flor Receptors - Z1900 Series)
Garage, Hangar and Service Areas	Z546, Z664, Z665, Z667, Z673, Z675, Z676
Indirect Waste Area (Condensate and Drip)	Z325, Z326, Z328, Z329, Z566
Industrial Areas – Vertical Adjustment	Z520, Z521, Z526
Medium Duty	Z550, Z551, Z609, Z611, Z667, Z730
Heavy Duty	Z508, Z509, Z511, Z512, Z520, Z521, Z532, Z539, Z541, Z545, Z575
Extra Heavy Duty	Z546, Z503, Z512, Z541, Z610, Z645, Z662, Z664, Z668, Z673, Z675, Z676
Traps and Backwater Valves	Z730, Z761
Planting Area	Z349, Z350
Prison Cell (Multi-Purpose)	Z355
Roadways	Z546, Z610, Z668, Z673

**Regularly furnished unless otherwise specified.*

Items designated as Best Sellers are most specified and are generally in stock for shipment.

This symbol denotes a product that is engineered to reduce installation and rework time.

CAST IRON EZ1™ NOMENCLATURE DECODER

SHIM KIT

Shims built into the rough-in cover for tilt adjustment, screws included.

ROUGH-IN COVER

Designed to stand up to rigourous jobsites with 3,000 lb load rating.

PROTECTIVE LABEL

Keeps grate/cover finish intact until the job is complete.

COVER OPTIONS

BZ1 = Round with Post-Pour Adjustability
SZ1- Square with Post-Pour Adjustability
ZN = Polished Nickel Bronze Top*
ZB = Polished Bronze Top
ZS = Polished Stainless Steel Top

BODY OPTIONS

IC = Inside Caulk
IG = Inside Gasket
IP = Threaded
NH = No-Hub
NL = Neo-Loc

OUTLET SIZES

Available in outlet sizes ranging from 2″ through 6″

A Whole Family of Product

-BZ1 = Round cast iron floor drain or cleanout
-SZ1 = Square cast iron floor drain or cleanout
-DP = Stainless steel deck plate for a cast iron floor drain or cleanout

Model Number Example

[ZN][415]-[3][NH]-[5][S][Z1]-[DP]

ZN = Denotes cover material
415 or **1400** = Denotes floor drain or cleanout
3 = Denotes outlet size
NH = Denotes outlet type
5, **6**, or **8** = Denotes cover size
S = Denotes round or square
Z1 = Denotes post-pour adjustability
DP = Denotes deck plate

Comes standard with nickel bronze unless otherwise noted.

Learn more at ***zurn.com/ez1***

Z300 THOROFLUSH DRAIN

ENGINEERING SPECIFICATION

Zurn ZN300 11" top thoroflush drain with integral double wall trap features cast iron body with white acid resistant epoxy coated exterior and interior, side outlet with seepage pan, nickel bronze flushing rim top, and slotted hinged grate.

Dimensions in inches [mm]		Grate Open Area sq in [cm²]	Approximate Weight lb [kg]
A Pipe Size	M		
2 [51]	3 [76]	18 [116]	50 [23]
3 [76]	2-1/2 [64]		
4 [102]	3 [76]		

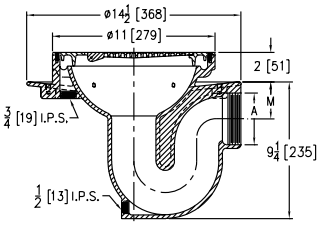

2" and 3" Pipe Sizes

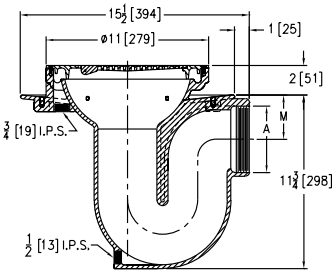

4" Pipe Size

PREFIXES	DESCRIPTION	A PIPE SIZE	LIST PRICE
ZN300*	Cast Iron Body with A.R.C. Interior and Exterior with Polished Nickel Bronze Top	2"	2,492.00
		3", 4"	2,587.00
ZB300	Cast Iron Body with A.R.C. Interior and Exterior with Polished Bronze Top	2"	2,348.00
		3", 4"	2,444.00
OUTLETS (SPECIFY PIPE SIZE IN INCHES AND TYPE OF OUTLET)			
OUTLET	**TYPE**	**PIPE SIZE/OUTLET TYPE**	**ADD**
IP	Threaded	2IP, 3IP, 4IP	N/C
SUFFIXES			**ADD**
–C	Clamping Collar		194.00
–FG	Free Set Grate		292.00
–IG	Integral Grate		107.00
–SC	Solid Cover		744.00
–ST	Solid Hinged Top		744.00
–VP	Vandal-Proof Screws in Frame		N/C
–WB	Water Supply Control Box (See Z1464)		5,330.00
BEST SELLER			**LIST PRICE**
ZN300-3IP			2,492.00

Z310 THOROFLUSH DRAIN

ENGINEERING SPECIFICATION

Zurn ZN310 11" top thoroflush drain features cast iron body with white acid resistant epoxy coated exterior and interior, bottom outlet with seepage pan, nickel bronze flushing rim top, and slotted hinged grate.

A Pipe Size inch [mm]	Grate Open Area sq in [cm²]	Approximate Weight lb [kg]
2 [51], 3 [76], 4 [102]	18 [116]	20 [9]

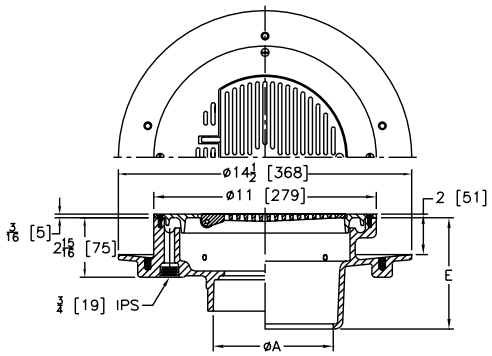

PREFIXES	DESCRIPTION	A PIPE SIZE	LIST PRICE
ZN310*	Cast Iron Body with A.R.C. Interior and Exterior with Polished Nickel Bronze Top	2", 3", 4"	2,604.00
ZB310	Cast Iron Body with A.R.C. Interior and Exterior with Polished Bronze Top	2", 3", 4"	2,409.00
OUTLETS (SPECIFY PIPE SIZE IN INCHES AND TYPE OF OUTLET)			
OUTLET	**TYPE**	**PIPE SIZE/OUTLET TYPE**	**E BODY HT. DIM.** / **ADD**
IP	Threaded	2IP, 3IP, 4IP	5-1/2" / 80.00
NL	Neo-Loc	2NL, 3NL, 4NL	4-5/8" / N/C
SUFFIXES			**ADD**
–C	Clamping Collar		194.00
–FG	Free Set Grate		292.00
–IG	Integral Grate		107.00
–ST	Solid Hinged Top		744.00
◷ –TC	Neo-Loc Test Cap Gasket (2", 3", 4" NL Bottom Outlet Only)		24.00
–VP	Vandal-Proof Screws in Frame		N/C
–WB	Water Supply Control Box (See Z1464)		5,330.00
SEE LEGACY ADDENDUM ON PAGE 369 FOR MORE INFORMATION			

**Regularly furnished unless otherwise specified.*

Items designated as Best Sellers are most specified and are generally in stock for shipment.

◷ This symbol denotes a product that is engineered to reduce installation and rework time.

For additional product information, please visit www.zurn.com

Z315 VANDAL-PROOF ACCESS DRAIN

ENGINEERING SPECIFICATION

Zurn ZN315 10″ top vandal-proof drain features Dura-Coated cast iron body bottom outlet, invertible membrane clamp, vertically adjustable nickel bronze top with secondary strainer, and hinged solid locking cover.

A Pipe Size inch [mm]	Approximate Weight lb [kg]
2 [51]	23 [10]
3 [76]	24 [11]
4 [102]	25 [11]

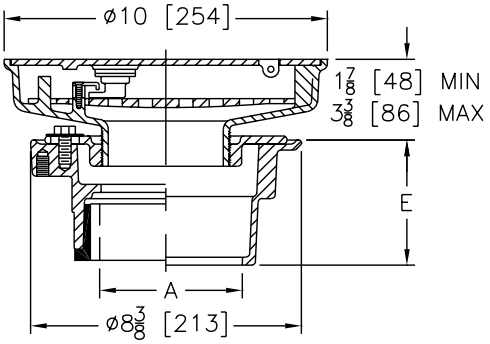

PREFIXES	DESCRIPTION	A PIPE SIZE		LIST PRICE
ZN315*	D.C.C.I Body with Polished Nickel Bronze Top	2″, 3″, 4″		3,461.00
OUTLETS (SPECIFY PIPE SIZE IN INCHES AND TYPE OF OUTLET)				
OUTLET	TYPE	PIPE SIZE/ OUTLET TYPE	E BODY HT. DIM.	ADD
NH	No-Hub	2NH, 3NH, 4NH	3-7/8″	N/C
NL	Neo-Loc	2NL, 3NL, 4NL	3-3/4″	N/C
SUFFIXES				ADD
–G	Galvanized Cast Iron			198.00
–HL	Hinged Locking Grate			N/C
–P	Trap Primer Connection			150.00
–TC	Neo-Loc Test Cap Gasket (2″, 3″, 4″ NL Bottom Outlet Only)			24.00
BEST SELLER				LIST PRICE
ZN315-3NL-P				3,611.00

Z319 THOROFLUSH DRAIN – LARGE CAPACITY

ENGINEERING SPECIFICATION

Zurn ZN319 25″ large capacity thoroflush drain features cast iron body with white acid resistant coating, bottom outlet, and nickel bronze top frame and grate with flushing connection.

A Pipe Size inch [mm]	Grate Open Area sq in [cm²]	Approximate Weight lb [kg]
3 [76], 4 [102], 6 [152], 8 [203]	232 [1496]	118 [54]

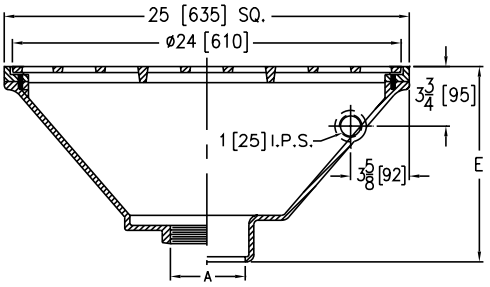

PREFIXES	DESCRIPTION	A PIPE SIZE		LIST PRICE
ZN319*	Cast Iron Body with A.R.C. Polished Nickel Bronze Top	3″, 4″, 6″, 8″		16,570.00
OUTLETS (SPECIFY PIPE SIZE IN INCHES AND TYPE OF OUTLET)				
OUTLET	TYPE	PIPE SIZE/OUTLET TYPE	E BODY HT. DIM.	ADD
IC	Inside Caulk	3IC, 4IC	12-1/8″	N/C
IG	Inside Gasket	3IG, 4IG	12-1/8″	N/C
IP	Threaded	3IP, 4IP, 6IP, 8IP	11″	80.00
SUFFIXES				ADD
–G	Galvanized Cast Iron			1,602.00
–P	Trap Primer Connection			150.00
–VP	Vandal-Proof Secured Top			206.00
SEE LEGACY ADDENDUM ON PAGE 369 FOR MORE INFORMATION				

For additional product information, please visit www.zurn.com

**Regularly furnished unless otherwise specified.*

Items designated as Best Sellers are most specified and are generally in stock for shipment.

This symbol denotes a product that is engineered to reduce installation and rework time.

Z320 REFRIGERATOR DRAIN

ENGINEERING SPECIFICATION

Zurn ZN320 9″ refrigerator drain features cast iron body with white acid resistant epoxy coated interior, nickel bronze flushing rim top, and recessed hinged grate.

A Pipe Size inch [mm]	Grate Open Area sq in [cm²]	Approximate Weight lb [kg]
2 [51], 3 [76], 4 [102]	7-1/2 [48]	15 [7]

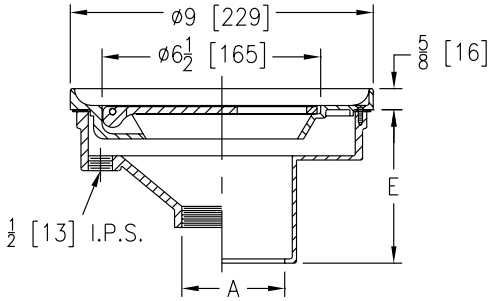

PREFIXES	DESCRIPTION	A PIPE SIZE	LIST PRICE
ZN320*	Cast Iron Body with A.R.C. Interior and Polished Nickel Bronze Top	2″, 3″, 4″	2,429.00
OUTLETS (SPECIFY PIPE SIZE IN INCHES AND TYPE OF OUTLET)			
OUTLET TYPE		**PIPE SIZE/ OUTLET TYPE**	**E BODY HT. DIM.**	**ADD**
IC	Inside Caulk	2IC, 3IC, 4IC	4-1/2″	N/C
IG	Inside Gasket	2IG, 3IG, 4IG	4-1/2″	N/C
IP	Threaded	2IP, 3IP, 4IP	3-7/16″	80.00
SUFFIXES				**ADD**
–G	Galvanized Cast Iron			387.00
–VP	Vandal-Proof Secured Top			58.00
SEE LEGACY ADDENDUM ON PAGE 369 FOR MORE INFORMATION				

Z325 INDIRECT WASTE FUNNEL WITH INTEGRAL BACKWATER VALVE

ENGINEERING SPECIFICATION

Zurn Z325 7″ or 9″ diameter indirect waste funnel features Dura-Coated cast iron body, plastic ball float, bronze backwater valve bushing and replaceable neoprene seat.

Dimensions in inches [mm]		Approximate Weight lb [kg]
A Pipe Size	B	
2 [51]	6-3/4 [171]	13 [6]
3 [76]		16 [7]
4 [102]	8-5/8 [219]	20 [9]
6 [152]		37 [17]

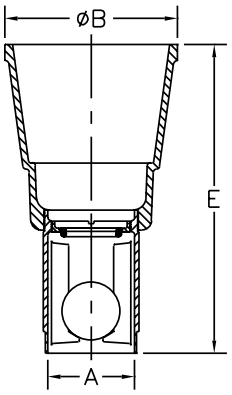

PREFIXES	DESCRIPTION	A PIPE SIZE		LIST PRICE
Z325*	D.C.C.I. Body	2″		1,017.00
		3″		1,078.00
		4″		1,391.00
		6″		1,434.00
OUTLETS (SPECIFY PIPE SIZE IN INCHES AND TYPE OF OUTLET)				
OUTLET TYPE		**PIPE SIZE/OUTLET TYPE**	**E BODY HT. DIM.**	**ADD**
NH	No-Hub	2NH, 3NH	12-3/4″	N/C
		4NH, 6NH	15-1/4″	N/C
SUFFIXES				**ADD**
–DB	Bottom Dome Strainer			58.00
–G	Galvanized Cast Iron			623.00
–S	Secondary Strainer			58.00
BEST SELLERS				**LIST PRICE**
Z325-3NH				1,078.00
Z325-4NH				1,391.00

**Regularly furnished unless otherwise specified.*

Items designated as Best Sellers are most specified and are generally in stock for shipment.

This symbol denotes a product that is engineered to reduce installation and rework time.

For additional product information, please visit www.zurn.com

Z326 INDIRECT WASTE FUNNEL

ENGINEERING SPECIFICATION

Zurn Z326 7″ or 9″ diameter Indirect waste funnel features Dura-Coated cast iron body and bottom outlet.

Dimensions in inch [mm]		Approximate Weight lb [kg]
A Pipe Size	B	
2 [51]	6-3/4 [171]	8 [4]
3 [76]		8 [4]
4 [102]	8-5/8 [219]	31 [14]
6 [152]		26 [12]

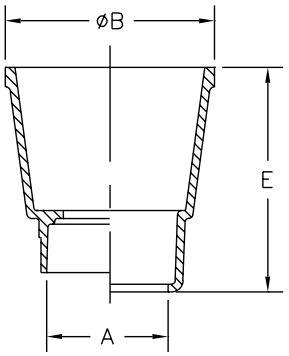

PREFIXES	DESCRIPTION	A PIPE SIZE	LIST PRICE
Z326*	D.C.C.I. Body	2″	380.00
		3″	442.00
		4″	756.00
		6″	784.00
ZARB326	Plain Bronze Body	2″	891.00
		3″	939.00
		4″	1,986.00
		6″	2,673.00

OUTLETS (SPECIFY PIPE SIZE IN INCHES AND TYPE OF OUTLET)				
OUTLET TYPE		PIPE SIZE/OUTLET TYPE	E BODY HT. DIM.	ADD
IP	Threaded	2IP, 3IP	7-1/4″	80.00
		4IP, 6IP	9-7/8″	80.00
NL	Neo-Loc	2NL, 3NL	6-5/8″	N/C
		4NL	9″	N/C

SUFFIXES			ADD
–AR	Acid Resisting Epoxy Coated Cast Iron		314.00
–DB	Bottom Dome Strainer	Z	58.00
		ZARB	116.00
–G	Galvanized Cast Iron		359.00

BEST SELLER	LIST PRICE
Z326-4NL-DB	814.00

Z328 FUNNEL CONVERTING ASSEMBLY

ENGINEERING SPECIFICATION

Zurn Z328 4″ or 6″ (specify) diameter funnel converting assembly features Dura-Coated cast iron (or finish to suit drain top), along with necessary fasteners to secure funnel to strainer.

Product Designation	Dimensions in inches [mm]			Approximate Weight lb [kg]
	B	C	U	
-4	4 [102]	2-1/4 [57]	3-3/4 [95]	2 [1]
-6	6 [152]	2-7/8 [73]	6 [152]	5 [2]

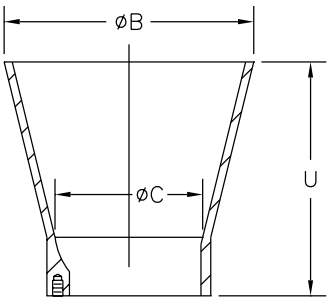

PREFIXES	DESCRIPTION	PRODUCT DESIGNATION	LIST PRICE
Z328*	D.C.C.I. Funnel	-4	178.00
		-6	286.00
ZB328	Polished Bronze Funnel	-4	365.00
		-6	561.00
ZN328	Polished Nickel Bronze Funnel	-4	421.00
		-6	626.00

SUFFIXES		ADD
–AR	Acid Resisting Epoxy Coated Cast Iron	206.00

BEST SELLERS	LIST PRICE
Z328-4	178.00
ZN328-4	421.00
ZN328-6	626.00

For additional product information, please visit www.zurn.com

**Regularly furnished unless otherwise specified.*

Items designated as Best Sellers are most specified and are generally in stock for shipment.

This symbol denotes a product that is engineered to reduce installation and rework time.

Z329 FUNNEL CONVERTING ASSEMBLY

ENGINEERING SPECIFICATION

Zurn Z329 7″ or 9″ (specify) oval funnel converting assembly features Dura-Coated cast iron (or finish to suit drain top), along with necessary fasteners to secure funnel to strainer. (Available on 7″ diameter or larger size drain tops only.)

Product Designation	Dimensions in inches [mm]			Approximate Weight lb [kg]
	L	L′	U	
-7	6-3/4 [171]	3 [76]	1 [25]	2 [1]
-9	8-7/8 [225]	3-5/8 [92]	3-3/4 [95]	4 [2]

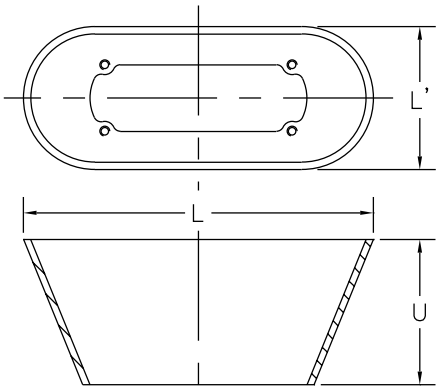

PREFIXES	DESCRIPTION	PRODUCT DESIGNATION	LIST PRICE
Z329*	D.C.C.I. Funnel	-7	178.00
		-9	421.00
ZN329	Polished Nickel Bronze Funnel	-7	421.00
		-9	874.00
SUFFIXES			**ADD**
–AR	Acid Resisting Epoxy Coated Cast Iron		206.00
BEST SELLERS			**LIST PRICE**
ZN329-7			421.00
ZN329-9			874.00

**Regularly furnished unless otherwise specified.*

Items designated as Best Sellers are most specified and are generally in stock for shipment.

This symbol denotes a product that is engineered to reduce installation and rework time.

For additional product information, please visit www.zurn.com

Z349 TERRACE PLANTING AREA DRAIN

ENGINEERING SPECIFICATION

Zurn Z349 terrace planting area drain features Dura-Coated cast iron body, 8" high perforated overflow standpipe with dome, and combination membrane flashing clamp/gravel guard.

A Pipe Size inch [mm]	Approximate Weight lb [kg]
2 [51], 3 [76], 4 [102]	40 [18]
5 [127], 6 [152]	42 [19]

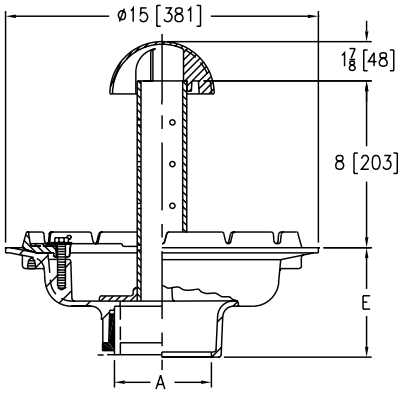

PREFIXES	DESCRIPTION	A PIPE SIZE		LIST PRICE
Z349*	D.C.C.I. Body with Standpipe and Dome	2", 3", 4"		1,335.00
		6"		1,565.00
ZN349	D.C.C.I. Body, Clamp with Polished Nickel Bronze Standpipe and Dome	2", 3", 4"		2,587.00
		6"		2,812.00
OUTLETS (SPECIFY PIPE SIZE IN INCHES AND TYPE OF OUTLET)				
OUTLET TYPE		**PIPE SIZE/OUTLET TYPE**	**E BODY HT. DIM.**	**ADD**
NH	No-Hub	2NH, 3NH, 4NH, 6NH	5-1/4"	N/C
NL	Neo-Loc	2NL, 3NL, 4NL	4-9/16"	N/C
		6NL	5-7/16"	N/C
SUFFIXES				**ADD**
– C	Underdeck Clamp			244.00
– G	Galvanized Cast Iron			641.00
⏲ –SA	Stabilizer Assembly (See Z1036)			148.00
–SD	Longer Standpipe For Each Additional 1" over 8" (Specify Height)		Z	147.00
			ZN	228.00
– SS	Stainless Steel Mesh Screen over Standpipe			POA
BEST SELLER				**LIST PRICE**
Z349-3NL				1,335.00

Z350 PLANTING AREA DRAIN

ENGINEERING SPECIFICATION

Zurn Z350 planting area drain features Dura-Coated cast iron body with bottom outlet and combination invertible membrane clamp, vertically adjustable nickel bronze head, floor flange, and 2" diameter perforated standpipe and dome.

A Pipe Size inches [mm]	Approximate Weight lb [kg]
2 [51], 3 [76], 4 [102]	22 [10]

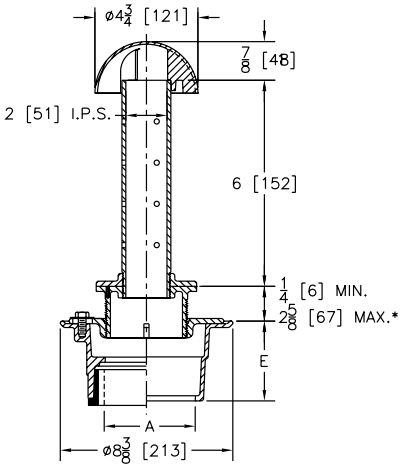

PREFIXES	DESCRIPTION	A PIPE SIZE		LIST PRICE
ZN350*	D.C.C.I. Body with Polished Stainless Steel Standpipe	2", 3", 4"		2,294.00
ZB350	D.C.C.I. Body with Polished Brass Standpipe	2", 3", 4"		1,993.00
OUTLETS (SPECIFY PIPE SIZE IN INCHES AND TYPE OF OUTLET)				
OUTLET TYPE		**PIPE SIZE/OUTLET TYPE**	**E BODY HT. DIM.**	**ADD**
IC	Inside Caulk	2IC, 3IC, 4IC	4-3/16"	N/C
IG	Inside Gasket	2IG, 3IG, 4IG	4-3/16"	N/C
IP	Threaded	2IP	2-7/16"	80.00
		3IP	2-3/4"	80.00
		4IP	2-3/16"	80.00
NH	No-Hub	2NH, 3NH, 4NH	3-13/16"	N/C
NL	Neo-Loc	2NL, 3NL, 4NL	3-7/8"	N/C
SUFFIXES				**ADD**
–C	Underdeck Clamp			150.00
–G	Galvanized Cast Iron			198.00
–P	Trap Primer Connection (Specify 1/2" or 3/4")			150.00
–SD	Longer Standpipe For Each Additional 1" over 6" (Specify Height)		ZB, ZN	98.00
–SS	Stainless Steel Mesh Screen over Dome			POA
DEDUCT				
-PS	Solid Standpipe			-345.00
BEST SELLERS				**LIST PRICE**
ZN350-2NH				2,294.00
ZB350-3NH				1,993.00
ZN350-3NH				2,294.00
ZN350-3NH-SS				POA
ZN350-3NL				2,294.00
ZN350-4NL				2,294.00

For additional product information, please visit www.zurn.com

**Regularly furnished unless otherwise specified.*

Items designated as Best Sellers are most specified and are generally in stock for shipment.

⏲ *This symbol denotes a product that is engineered to reduce installation and rework time.*

Z355 PRISON CELL FLOOR DRAIN

ENGINEERING SPECIFICATION

Zurn ZN355 prison cell floor drain features Dura-Coated cast iron body with side outlet, integral trap, anchor flange, and adjustable nickel bronze slotted strainer secured with spanner type vandal-proof screws.

A Pipe Size inches [mm]	Grate Open Area sq in [cm²]	Approximate Weight lb [kg]
2 [51]	3-1/2 [23]	13 [6]
3 [76]		15 [7]

PREFIXES	DESCRIPTION	A PIPE SIZE	LIST PRICE
ZN355*	D.C.C.I. Body with Polished Nickel Bronze Top	2″	1,006.00
		3″	1,116.00
OUTLETS (SPECIFY PIPE SIZE IN INCHES AND TYPE OF OUTLET)			
OUTLET TYPE		PIPE SIZE/OUTLET TYPE	ADD
IP	Threaded	2IP, 3IP	N/C
SUFFIXES			ADD
–G	Galvanized Cast Iron		185.00
BEST SELLER			LIST PRICE
ZN355-3IP			1,116.00

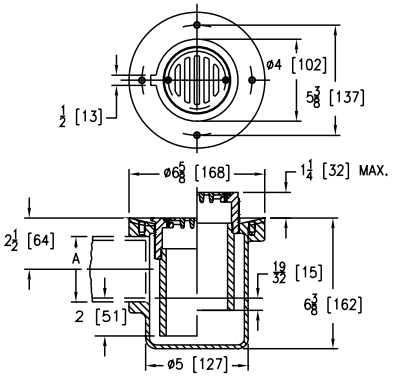

Z400 "TYPE B" ROUND STRAINER WITH HEEL-PROOF SQUARE OPENINGS

ENGINEERING SPECIFICATION

Zurn Z( )400B "TYPE B" round adjustable light-duty strainer top includes square heel-proof openings and secured grate. (Specify ZB or ZN finish.)

Strainer Designation	Dimensions in inches [mm]		Open Area sq in [cm²]	Approximate Weight lb [kg]
	Size B	Height F		
-5B	5 [127]	2 [51]	8 [52]	2 [1]
-6B	6 [152]	2-1/4 [57]	9 [58]	3 [1]
-7B	7 [178]	2-5/8 [67]	12 [77]	4 [2]
-8B	8 [203]		18 [116]	5 [2]
-10B	10 [254]	3 [76]	26 [168]	13 [6]

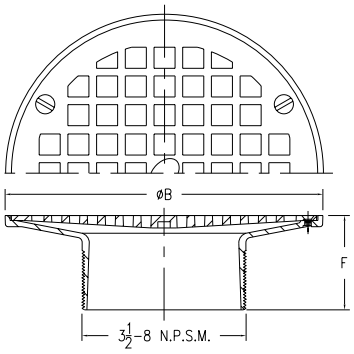

PREFIXES	DESCRIPTION	STRAINER DESIGNATION	LIST PRICE
ZN400*	Polished Nickel Bronze Top	-5B	292.00
		-6B	399.00
		-7B	489.00
		-8B	660.00
		-10B	972.00
ZB400	Polished Bronze Top	-5B	269.00
		-6B	343.00
		-7B	455.00
		-8B	615.00
		-10B	910.00
SUFFIXES			ADD
–CP	Chrome-Plated Bronze Top		26.00
◷ –HD	Heavy-Duty Slotted Grate (ZN 5″ & 6″ only with 4″ shank)		206.00
–OF	Oval Funnel (6″, 7″, 8″, 10″ Strainers Only) (See Z329-7)		–
◷ –PC	Protective Cover		64.00
–SG	Solid Gasketed Cover (Will not function as a gas-tight cleanout cover.)		POA
–V	Backwater Valve (Not Available with -Y)		380.00
–VP	Vandal-Proof Secured Top		58.00
–Y	Sediment Bucket (Not Available with -V)		109.00
–4	4″ Diameter Funnel (See Z328)		–
BEST SELLERS			LIST PRICE
ZB400-5B			269.00
ZB400-5B-CP			295.00
ZN400-5B			292.00
ZN400-5B-VP			350.00
ZB400-6B			343.00
ZN400-6B			399.00
ZN400-8B			660.00
ZN400-10B			972.00

**Regularly furnished unless otherwise specified.*

Items designated as Best Sellers are most specified and are generally in stock for shipment.

◷ This symbol denotes a product that is engineered to reduce installation and rework time.

For additional product information, please visit www.zurn.com

ZS400 "TYPE BS" ROUND STRAINER WITH SLOTTED OPENINGS

ENGINEERING SPECIFICATION

Zurn ZS400BS "TYPE BS" round adjustable medium-duty strainer top includes heel-proof slotted, secured grate.

Strainer Designation	Dimensions in inches [mm]		Open Area sq in [cm²]	Approximate Weight lb [kg]
	Size B	Height F		
-5BS	5 [127]	2 [51]	7 [45]	1-1/2 [1/2]
-6BS	6 [152]	2-1/4 [57]	11 [71]	2-1/2 [1]
-7BS	7 [178]	2-5/8 [67]	15 [97]	3 [1]
-8BS	8 [203]		20 [129]	4-1/2 [2]
-10BS	10 [254]	3 [76]	26-1/2 [171]	8 [4]

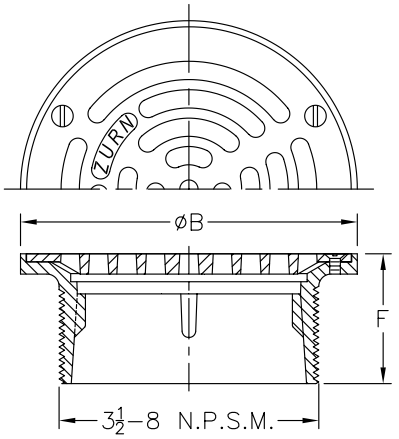

PREFIXES	DESCRIPTION	STRAINER DESIGNATION	LIST PRICE
ZS400*	Type 304 (CF8) Stainless Steel Top	-5BS	850.00
		-6BS	1,108.00
		-7BS	1,488.00
		-8BS	1,564.00
		-10BS	1,906.00
ZM400	Type 316 (CF8M) Stainless Steel Top	-5BS	POA
		-6BS	POA
		-7BS	POA
		-8BS	POA
		-10BS	POA
SUFFIXES			**ADD**
–VP	Vandal-Proof Secured Top		58.00
–Y	Stainless Steel Sediment Bucket		109.00

BEST SELLERS	LIST PRICE
ZS400-5BS	850.00
ZS400-6BS	1,108.00
ZS400-8BS	1,564.00

Z400 "TYPE BL" ROUND STRAINER WITH DEX-O-TEX FLANGE

ENGINEERING SPECIFICATION

Zurn Z( )400BL "TYPE BL" round adjustable light-duty strainer features Dura-Coated cast iron 13" diameter latex membrane flange, nickel bronze or polished bronze frame, and secured grate. (Specify ZB or ZN finish.)

Strainer Designation	Top Size inch [mm]	Open Area sq in [cm²]	Approximate Weight lb [kg]
-5BL	5 [127]	7 [45]	5 [2]

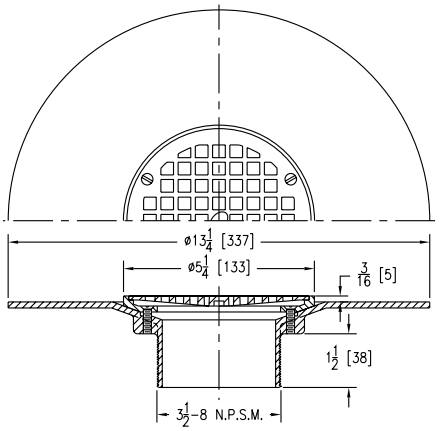

PREFIXES	DESCRIPTION	STRAINER DESIGNATION	LIST PRICE
ZN400*	Polished Nickel Bronze Top	-5BL	1,199.00
ZB400	Polished Bronze Top	-5BL	1,143.00
SUFFIXES			**ADD**
–CP	Chrome-Plated Bronze Top		26.00
⏲ –PC	Protective Cover		64.00
–VP	Vandal-Proof Secured Top		58.00
–Y	Sediment Bucket		109.00

BEST SELLER	LIST PRICE
ZN400-5BL	1,199.00

For additional product information, please visit www.zurn.com

**Regularly furnished unless otherwise specified.*

Items designated as Best Sellers are most specified and are generally in stock for shipment.

⏲ This symbol denotes a product that is engineered to reduce installation and rework time.

Z400 "TYPE BZ" ROUND LEVELING STRAINER WITH SQUARE OPENINGS

Patented

ENGINEERING SPECIFICATION

Zurn Z( )400BZ "TYPE BZ" round adjustable light-duty leveling strainer top includes stainless steel leveling screws, square heel-proof openings, secured grate, and cast iron threaded head. (Specify ZB or ZN finish) 360° leveling frame design shall provide a maximum flat adjustment height of 3/8" and a maximum slope adjustment of 7/8" per foot.

Strainer Designation	Dimensions in inches [mm]		Open Area sq in [cm²]	Approximate Weight lb [kg]
	Size B	Height F		
-5BZ	5-3/16 [132]	2-7/16 [62]	8 [52]	2 [1]
-6BZ	6-1/4 [159]	2-19/32 [66]	9 [58]	3 [1]

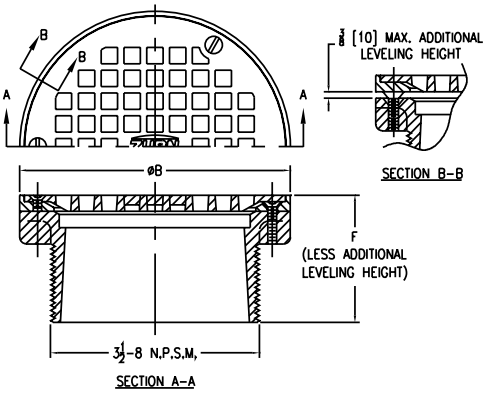

PREFIXES	DESCRIPTION	STRAINER DESIGNATION	LIST PRICE
ZN400*	Polished Nickel Bronze Top	-5BZ	292.00
		-6BZ	399.00
ZB400	Polished Bronze Top	-5BZ	269.00
		-6BZ	343.00

SUFFIXES		ADD
–CP	Chrome-Plated Bronze Top	26.00
–DP	Decorative Polished Top	171.00
◷ –PC	Protective Cover	64.00
–V	Backwater Valve (Not Available with -Y)	380.00
–VP	Vandal-Proof Secured Top	58.00
–Y	Sediment Bucket (Not Available with -V)	109.00

BEST SELLERS	LIST PRICE
ZN400-5BZ	292.00
ZN400-5BZ-PC	356.00
ZN400-6BZ	399.00

Z400 "TYPE C" ROUND HINGED STRAINER

ENGINEERING SPECIFICATION

Zurn Z( )400C "TYPE C" round adjustable light-duty strainer top includes slotted heel-proof openings and hinged grate. (Specify ZB or ZN finish.)

Strainer Designation	Dimensions in inches [mm]		Open Area sq in [cm²]	Approximate Weight lb [kg]
	Size B	Height F		
-5C	5 [127]	2 [51]	8 [52]	2 [1]
-6C	6 [152]	2-1/4 [57]	9 [58]	3 [1]
-7C	7 [178]	2-5/8 [67]	13 [84]	4 [2]
-8C	8 [203]		18 [116]	5 [2]

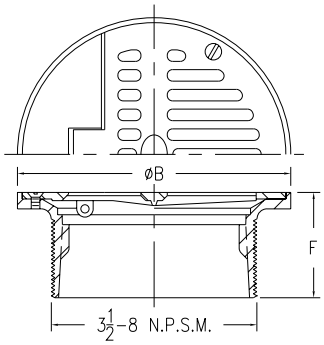

PREFIXES	DESCRIPTION	STRAINER DESIGNATION	LIST PRICE
ZN400*	Polished Nickel Bronze Top	-5C	561.00
		-6C	622.00
		-7C	767.00
		-8C	864.00
ZB400	Polished Bronze Top	-5C	527.00
		-6C	561.00
		-7C	732.00
		-8C	791.00

SUFFIXES		ADD
–CP	Chrome-Plated Bronze Top	26.00
◷ –PC	Protective Cover	64.00
–V	Backwater Valve (Not Available with -Y)	380.00
–VP	Vandal-Proof Secured Top	58.00
–Y	Sediment Bucket (Not Available with -V)	109.00

BEST SELLER	LIST PRICE
ZN400-6C	622.00

**Regularly furnished unless otherwise specified.*

Items designated as Best Sellers are most specified and are generally in stock for shipment.

◷ This symbol denotes a product that is engineered to reduce installation and rework time.

For additional product information, please visit www.zurn.com

Z400 "TYPE D" ROUND STRAINER WITH SOLID HINGED COVER

ENGINEERING SPECIFICATION

Zurn Z( )400D "TYPE D" round adjustable light-duty strainer top includes solid hinged cover and secondary strainer. (Specify ZB or ZN finish.)

Strainer Designation	Dimensions in inches [mm]		Open Area sq in [cm²]	Approximate Weight lb [kg]
	Size B	Height F		
-5D	5 [127]	2 [51]	8 [52]	3 [1]
-6D	6 [152]	2-1/4 [57]	9 [58]	4 [2]
-7D	7 [178]	2-5/8 [67]	13 [84]	5 [2]
-8D	8 [203]		18 [116]	6 [3]

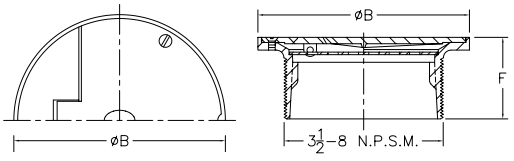

PREFIXES	DESCRIPTION	STRAINER DESIGNATION	LIST PRICE
ZN400*	Polished Nickel Bronze Top	-5D	675.00
		-6D	767.00
		-7D	1,199.00
		-8D	1,215.00
ZB400	Polished Bronze Top	-5D	622.00
		-6D	660.00
		-7D	1,051.00
		-8D	1,108.00

SUFFIXES		ADD
–PC	Protective Cover	64.00
–V	Backwater Valve (Not Available with -Y)	380.00
–VP	Vandal-Proof Secured Top	58.00
–Y	Sediment Bucket (Not Available with -V)	109.00

SEE LEGACY ADDENDUM ON PAGE 369 FOR MORE INFORMATION

Z400 "TYPE E" ROUND STRAINER WITH INTEGRAL FUNNEL

ENGINEERING SPECIFICATION

Zurn Z( )400E "TYPE E" round adjustable strainer top includes combination funnel/grate with perimeter openings. (Specify ZB or ZN finish.)

Strainer Designation	Top Size inch [mm]	Open Area sq in [cm²]	Approximate Weight lb [kg]
-7E	7 [178]	5 [32]	10 [5]

PREFIXES	DESCRIPTION	STRAINER DESIGNATION	LIST PRICE
ZN400*	Polished Nickel Bronze Top	-7E	1,158.00
ZB400	Polished Bronze Top	-7E	1,051.00

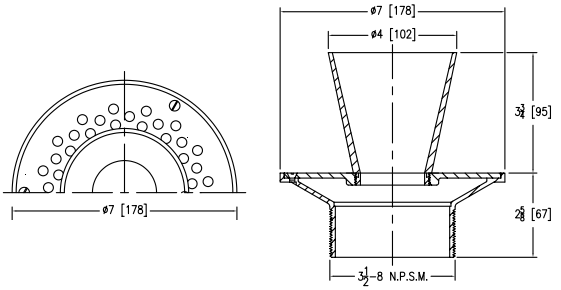

SUFFIXES		ADD
–V	Backwater Valve (Not Available with -Y)	380.00
–VP	Vandal-Proof Secured Top	58.00
–Y	Sediment Bucket (Not Available with -V)	109.00

BEST SELLER	LIST PRICE
ZN400-7E	1,158.00

Z400 "TYPE G" ROUND STRAINER WITH DOME

ENGINEERING SPECIFICATION

Zurn Z( )400G "TYPE G" round adjustable strainer top includes secured slotted dome strainer. (Specify ZB or ZN finish.)

Strainer Designation	Dimensions in inches [mm]		Open Area sq in [cm²]	Approximate Weight lb [kg]
	Size B	Height F		
-5G	5 [127]	2 [51]	15 [97]	2 [1]
-6G	6 [152]	2-1/4 [57]		4 [2]

PREFIXES	DESCRIPTION	STRAINER DESIGNATION	LIST PRICE
ZN400*	Polished Nickel Bronze Top	-5G	489.00
		-6G	622.00
ZB400	Polished Bronze Top	-5G	453.00
		-6G	544.00

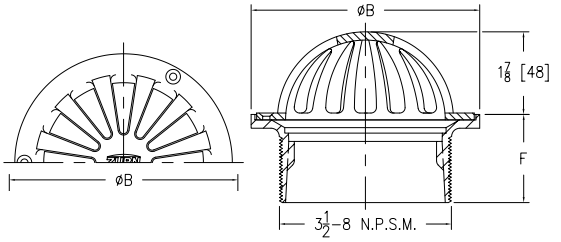

SUFFIXES		ADD
–SS	Stainless Mesh Screen Over Dome	527.00
–V	Backwater Valve (Not Available with -Y)	380.00
–VP	Vandal-Proof Secured Top	58.00
–Y	Sediment Bucket (Not Available with -V)	109.00

BEST SELLERS	LIST PRICE
ZN400-5G	489.00
ZN400-6G	622.00

For additional product information, please visit www.zurn.com

**Regularly furnished unless otherwise specified.*

Items designated as Best Sellers are most specified and are generally in stock for shipment.

This symbol denotes a product that is engineered to reduce installation and rework time.

Z400 "TYPE H" ROUND STRAINER WITH CLAMP DEVICE

ENGINEERING SPECIFICATION

Zurn Z( )400H "TYPE H" round adjustable light-duty strainer top includes integral clamping frame and secured heel-proof grate. (Specify ZB or ZN finish.)

Strainer Designation	B Top Size Inches [mm]	Open Area sq in [cm²]	Approximate Weight lb [kg]
-6H	6 [152]	7 [45]	4 [2]
-9H	9 [229]	11 [71]	10 [5]

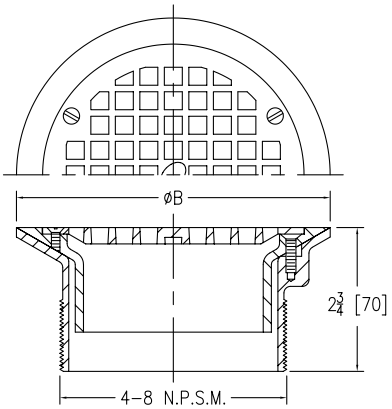

PREFIXES	DESCRIPTION	STRAINER DESIGNATION	LIST PRICE
ZN400*	Polished Nickel Bronze Top	-6H	1,391.00
		-9H	1,829.00
ZB400	Polished Bronze Top	-6H	1,235.00
		-9H	1,617.00
SUFFIXES			**ADD**
–VP	Vandal-Proof Secured Top		58.00
–Y	Sediment Bucket		109.00
BEST SELLER			**LIST PRICE**
ZN400-6H			1,391.00

Z400 "TYPE I" ROUND STRAINER WITH RAISED LIP

ENGINEERING SPECIFICATION

Zurn Z( )400I "TYPE I" round adjustable strainer top includes loose set recessed grate. (Specify ZB or ZN finish.)

Strainer Designation	Dimensions in inches [mm]			Open Area sq in [cm²]	Approximate Weight lb [kg]
	Size B	C	Height F		
-5I	5-7/16 [138]	7/8 [22]	3 [76]	8 [52]	5 [2]
-7I	7-3/8 [187]	1 [25]	3-3/4 [95]	13 [84]	10 [5]
-9I	9 [229]	1/2 [13]	3-1/2 [89]	23 [148]	14 [6]

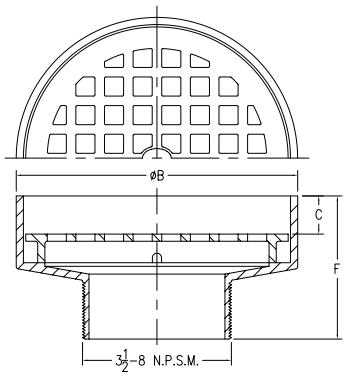

PREFIXES	DESCRIPTION	STRAINER DESIGNATION	LIST PRICE
ZN400*	Polished Nickel Bronze Top	-5I	843.00
		-7I	923.00
		-9I	1,372.00
ZB400	Polished Bronze Top	-5I	781.00
		-7I	831.00
		-9I	1,238.00
SUFFIXES			**ADD**
–TS	Top Secured with Slotted Screws		58.00
–V	Backwater Valve (Not Available with -Y)		380.00
–VP	Vandal-Proof Secured Top		117.00
–Y	Sediment Bucket (Not Available with -V)		109.00
BEST SELLERS			**LIST PRICE**
ZN400-5I			843.00
ZN400-7I			923.00

**Regularly furnished unless otherwise specified.*

Items designated as Best Sellers are most specified and are generally in stock for shipment.

This symbol denotes a product that is engineered to reduce installation and rework time.

For additional product information, please visit www.zurn.com

Z400 "TYPE J" RECTANGULAR STRAINER WITH HEEL-PROOF SLOTTED OPENINGS

ENGINEERING SPECIFICATION

Zurn Z( )400J "TYPE J" rectangular adjustable light-duty heel-proof strainer top with Dura-Coated cast iron head, polished frame and secured slotted grate. (Specify ZB or ZN finish.)

Strainer Designation	Dimensions in inches [mm] Size B' x B	Height F	Open Area sq in [cm²]	Approximate Weight lb [kg]
-8J	4-1/2 [114] x 8 [203]	3 [76]	12 [77]	4 [2]
-9J	5 [127] x 9 [229]		15 [97]	5 [2]
-13J	5-1/2 [140] x 13 [330]	4-7/8 [124]	20 [129]	9 [4]
-17J	5 [127] x 17 [432]	3-1/2 [89]	29 [187]	14 [6]
-21J	5 [127] x 21 [533]		32 [206]	18 [8]
-20J	10 [254] x 20 [508]	3-5/8 [92]	66 [426]	34 [15]

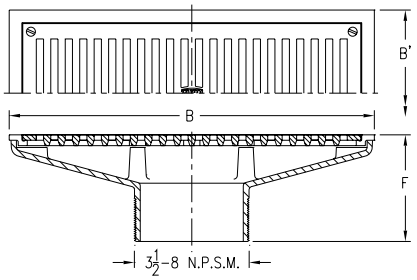

PREFIXES	DESCRIPTION	STRAINER DESIGNATION	LIST PRICE
ZN400*	Polished Nickel Bronze Top	-8J	864.00
		-9J	1,643.00
		-13J	2,357.00
		-17J	1,333.00
		-21J	2,005.00
		-20J	7,705.00
ZB400	Polished Bronze Top	-8J	791.00
		-9J	791.00
		-13J	1,108.00
		-17J	2,281.00
		-21J	1,743.00
		-20J	3,262.00
SUFFIXES			**ADD**
–G	Galvanized Cast Iron		295.00
–V	Backwater Valve (Not Available with -Y)		380.00
–VP	Vandal-Proof Secured Top		58.00
–Y	Sediment Bucket (Not Available with -V)		109.00

SEE LEGACY ADDENDUM ON PAGE 369 FOR MORE INFORMATION

Z400 "TYPE K" ANGULAR STRAINER

ENGINEERING SPECIFICATION

Zurn Z( )400K "TYPE K" angular adjustable light-duty strainer top includes secured flush type angle grate. (Specify ZB or ZN finish.)

Strainer Designation	Dimensions in inches [mm] Size B x B'	C	D	Height F	Open Area sq in [cm²]	Approximate Weight lb [kg]
-5K	3-3/4 [95] x 5 [127]	1-7/32 [31]	3-3/4 [95]	2-3/8 [60]	11 [71]	9 [4]
-7K	6-5/8 [168] x 7 [178]	2-15/46 [59]	6-5/8 [168]	3-3/4 [95]	29 [187]	16 [7]

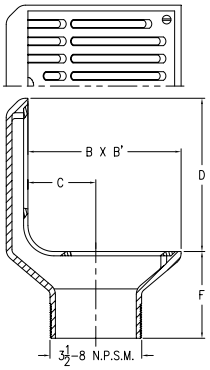

PREFIXES	DESCRIPTION	STRAINER DESIGNATION	LIST PRICE
ZN400*	Polished Nickel Bronze Top	-5K	1,759.00
		-7K	2,250.00
ZB400	Polished Bronze Top	-5K	1,611.00
		-7K	2,061.00
SUFFIXES			**ADD**
–V	Backwater Valve (Not Available with -Y)		380.00
–VP	Vandal-Proof Secured Top		58.00
–Y	Sediment Bucket (Not Available with -V)		109.00

SEE LEGACY ADDENDUM ON PAGE 369 FOR MORE INFORMATION

For additional product information, please visit www.zurn.com

**Regularly furnished unless otherwise specified.*

Items designated as Best Sellers are most specified and are generally in stock for shipment.

This symbol denotes a product that is engineered to reduce installation and rework time.

Z400 "TYPE M" ROUND STRAINER WITH SLOTTED OPENINGS AND SUR-SET BUCKET

ENGINEERING SPECIFICATION

Zurn Z( )400M "TYPE M" round adjustable light-duty strainer top includes slotted heel-proof openings, secured grate, and Sur-Set bucket. (Specify ZB or ZN finish.)

PREFIXES	DESCRIPTION	STRAINER DESIGNATION	LIST PRICE
ZN400*	Polished Nickel Bronze Top	-5M	775.00
ZB400	Polished Bronze Top	-5M	724.00
SUFFIXES			**ADD**
–PC	Protective Cover		64.00
–VP	Vandal-Proof Secured Top		58.00

Strainer Designation	Dimensions in inches [mm]		Open Area sq in [cm²]	Approximate Weight lb [kg]
	Size B	Height F		
-5M	5 [127]	2 [51]	4-1/2 [29]	2 [1]

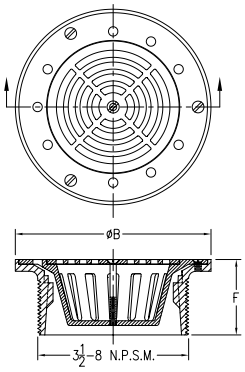

Z400 "TYPE N" ROUND STRAINER WITH DEEP FLANGED GRATE

ENGINEERING SPECIFICATION

Zurn Z( )400N "TYPE N" round adjustable light-duty strainer top includes loose set deep flanged grate. (Specify Z, ZB or ZN finish.)

PREFIXES	DESCRIPTION	STRAINER DESIGNATION		LIST PRICE
ZN400*	Polished Nickel Bronze Top	-7N		923.00
		-9N		1,355.00
Z400	Dura-Coated Cast Iron Top	-7N		349.00
		-9N		472.00
ZB400	Polished Bronze Top	-7N		831.00
		-9N		1,238.00
SUFFIXES				**ADD**
–DG	Ductile Grate		7″	129.00
			9″	165.00
-G	Galvanized Cast Iron Top			295.00
–TS	Top Secured with Slotted Screws			58.00
–V	Backwater Valve (Not Available with -Y)			380.00
–VP	Vandal-Proof Secured Top			117.00
–Y	Sediment Bucket (Not Available with -V)			109.00

Strainer Designation	Dimensions in inches [mm]		Open Area sq in [cm²]	Approximate Weight lb [kg]
	Size B	Height F		
-7N	7 [178]	2-3/4 [70]	12 [77]	8 [4]
-9N	9 [229]	3 [76]	23 [148]	12 [5]

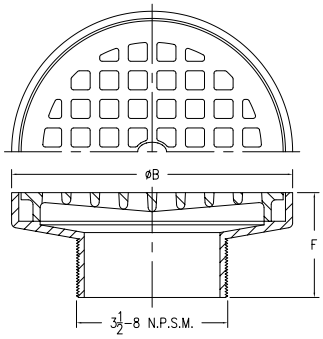

**Regularly furnished unless otherwise specified.*

Items designated as Best Sellers are most specified and are generally in stock for shipment.

This symbol denotes a product that is engineered to reduce installation and rework time.

For additional product information, please visit www.zurn.com

Z400 "TYPE S" SQUARE STRAINER

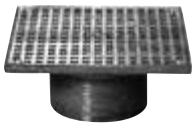

ENGINEERING SPECIFICATION

Zurn Z( )400S "TYPE S" square adjustable light-duty strainer top includes secured heel-proof grate. (Specify ZB or ZN finish.)

Strainer Designation	Dimensions in inches [mm]		Open Area sq in [cm²]	Approximate Weight lb [kg]
	Size B	Height F		
-5S	5 x 5 [127]	2- 1/8 [54]	9 [58]	3 [1]
-6S	6 x 6 [152]	2-11/32 [60]	13 [84]	4 [2]
-7S	7 x 7 [178]	2-3/8 [60]	21 [135]	5 [2]
-8S	8 x 8 [203]		28 [181]	6 [3]
-10S	10 x 10 [254]			12 [5]

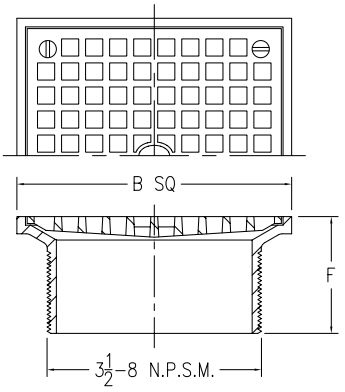

PREFIXES	DESCRIPTION	STRAINER DESIGNATION	LIST PRICE
ZN400*	Polished Nickel Bronze Top	-5S	453.00
		-6S	527.00
		-7S	671.00
		-8S	850.00
		-10S	1,462.00
ZB400	Polished Bronze Top	-5S	399.00
		-6S	489.00
		-7S	615.00
		-8S	755.00
		-10S	1,352.00

SUFFIXES		ADD
–CP	Chrome-Plated Bronze Top	26.00
–HD	Heavy-Duty Slotted Grate (ZN 6″ x 6″ only with 4″ shank)	206.00
–OF	Oval Funnel (6″, 7″, 8″, 10″ Strainers Only) (See Z329-7)	–
⏲ –PC	Protective Cover	64.00
–V	Backwater Valve (Not Available with -Y)	380.00
–VP	Vandal-Proof Secured Top	58.00
–Y	Sediment Bucket (Not Available with -V)	109.00
–4	4″ Diameter Funnel (See Z328)	–

BEST SELLERS	LIST PRICE
ZB400-5S	399.00
ZN400-5S	453.00
ZB400-5S-CP	425.00
ZB400-6S	489.00
ZB400-6S-CP	515.00
ZN400-6S	527.00
ZN400-6S-HD	733.00
ZN400-6S-VP	585.00
ZB400-8S	755.00
ZN400-8S	850.00

ZS400 "TYPE SS" SQUARE STRAINER

ENGINEERING SPECIFICATION

Zurn ZS400SS "TYPE SS" square adjustable strainer top includes heel-proof, medium-duty grate.

Strainer Designation	Dimensions in inches [mm]		Open Area sq in [cm²]	Approximate Weight lb [kg]
	Size B	Height F		
-5SS	5 x 5 [127]	2 [51]	8-1/2 [55]	2-1/2 [1]
-6SS	6 x 6 [152]	2-1/4 [57]	13 [84]	3-1/2 [2]
-8SS	8 x 8 [203]		24-1/2 [158]	6-1/2 [3]

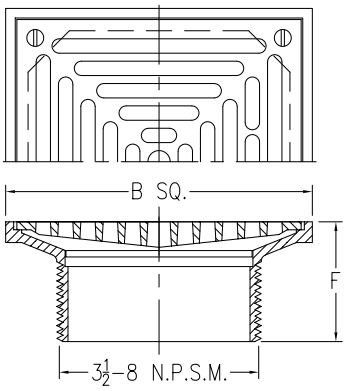

PREFIXES	DESCRIPTION	STRAINER DESIGNATION	LIST PRICE
ZS400*	Type 304 (CF8) Stainless Steel Top	-5SS	899.00
		-6SS	1,146.00
		-8SS	1,619.00
ZM400	Type 316 (CF8M) Stainless Steel Top	-5SS	POA
		-6SS	POA
		-8SS	POA

SUFFIXES		ADD
–VP	Vandal-Proof Secured Top	58.00
–Y	Stainless Steel Sediment Bucket	109.00

BEST SELLERS	LIST PRICE
ZS400-5SS	899.00
ZS400-6SS	1,146.00
ZS400-8SS	1,619.00

For additional product information, please visit www.zurn.com

**Regularly furnished unless otherwise specified.*

Items designated as Best Sellers are most specified and are generally in stock for shipment.

⏲ This symbol denotes a product that is engineered to reduce installation and rework time.

Z400 "TYPE SC" SQUARE STRAINER WITH SOLID HINGED COVER

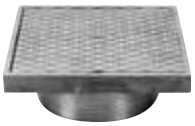

ENGINEERING SPECIFICATION

Zurn Z( )400SC "TYPE SC" square adjustable strainer top includes secondary strainer and solid, scoriated, hinged, light-duty cover. (Specify ZB or ZN finish).

Strainer Designation	Dimensions in inches [mm]		Approximate Weight lb [kg]
	Size B	Height F	
-6SC	6 [152]	2-15/16 [75]	7 [3]

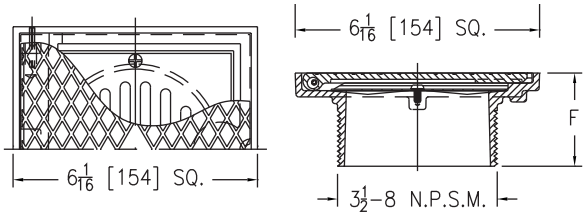

PREFIXES	DESCRIPTION	STRAINER DESIGNATION	LIST PRICE
ZN400*	Polished Nickel Bronze Top	-6SC	1,049.00
ZB400	Polished Bronze Top	-6SC	891.00
SUFFIXES			**ADD**
–CP	Chrome-Plated		295.00
-GC	Gasketed Cover		84.00
–LR	Lift Ring		224.00
–TS	Top Secured with Slotted Screw		58.00
–VP	Vandal-Proof Secured Top		58.00
–Y	Sediment Bucket		109.00

Z400 "TYPE SH" SQUARE HINGED STRAINER

ENGINEERING SPECIFICATION

Zurn Z( )400SH "TYPE SH" square adjustable strainer top includes light-duty hinged grate. (Specify ZB or ZN finish.)

Strainer Designation	Dimensions in inches [mm]		Open Area sq in [cm²]	Approximate Weight lb [kg]
	Size B	Height F		
-6SH	6 x 6 [152]	2-1/4 [57]	12 [77]	4 [2]
-8SH	8 x 8 [203]	3 [76]	21 [135]	8 [4]

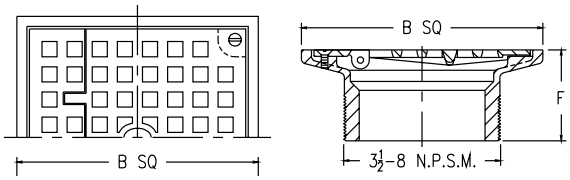

PREFIXES	DESCRIPTION	STRAINER DESIGNATION	LIST PRICE
ZN400*	Polished Nickel Bronze Top	-6SH	798.00
		-8SH	1,117.00
ZB400	Polished Bronze Top	-6SH	764.00
		-8SH	1,025.00
SUFFIXES			**ADD**
–V	Backwater Valve (Not Available with -Y)		380.00
–VP	Vandal-Proof Secured Top		58.00
–Y	Sediment Bucket (Not Available with -V)		109.00
BEST SELLER			**LIST PRICE**
ZN400-6SH			798.00

Z400 "TYPE SL" SQUARE STRAINER WITH DEX-O-TEX FLANGE

ENGINEERING SPECIFICATION

Zurn Z( )400SL "TYPE SL" square adjustable strainer top features Dura-Coated cast iron head with 14" square latex membrane flange, complete with polished bronze frame and secured, light-duty, heel-proof grate. (Specify ZB or ZN finish.)

Strainer Designation	Top Size inch [mm]	Open Area sq in [cm²]	Approximate Weight lb [kg]
-6SL	6 x 6 [152]	14 [90]	12 [5]

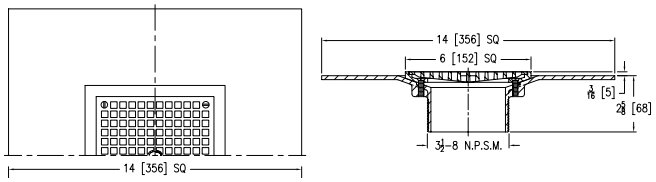

PREFIXES	DESCRIPTION	STRAINER DESIGNATION	LIST PRICE
ZN400*	Polished Nickel Bronze Top	-6SL	1,199.00
ZB400	Polished Bronze Top	-6SL	1,143.00
SUFFIXES			**ADD**
–CP	Chrome-Plated Bronze Top		26.00
⏲ –PC	Protective Cover		64.00
–VP	Vandal-Proof Secured Top		58.00
–Y	Sediment Bucket		109.00

**Regularly furnished unless otherwise specified.*

Items designated as Best Sellers are most specified and are generally in stock for shipment.

⏲ This symbol denotes a product that is engineered to reduce installation and rework time.

For additional product information, please visit www.zurn.com

Z400 "TYPE SZ" SQUARE LEVELING STRAINER WITH SLOTTED OPENINGS

Patented

ENGINEERING SPECIFICATION

Zurn Z( )400SZ "TYPE SZ" square adjustable light-duty leveling strainer top includes stainless steel leveling screws, slotted heel-proof openings, secured grate, and cast iron threaded head. (Specify ZB, ZN or ZS finish.) Leveling frame design shall provide a maximum flat adjustment height of 3/8" and a maximum slope adjustment of 7/8" per foot across flat sides of the frame.

Strainer Designation	Dimensions in inches [mm]		Open Area sq in [cm²]	Approximate Weight lb [kg]
	Size B x B'	Height F		
-5SZ	5 x 5 [127]	2-7/16 [62]	8 [52]	3 [1]
-6SZ	6 x 6 [152]		12 [77]	4 [2]

PREFIXES	DESCRIPTION	STRAINER DESIGNATION	LIST PRICE
ZN400*	Polished Nickel Bronze Top	-5SZ	453.00
		-6SZ	527.00
ZB400	Polished Bronze Top	-5SZ	399.00
		-6SZ	489.00
ZS400	Polished Type 304 (CF8) Stainless Steel Top	-5SZ	POA
		-6SZ	POA

SUFFIXES		ADD
–CP	Chrome-Plated Bronze Top	26.00
-DP	Decorative Polished Top	171.00
–PC	Protective Cover	64.00
-V	Backwater Valve (Not Available with -Y)	380.00
–VP	Vandal-Proof Secured Top	58.00
–Y	Sediment Bucket (Not Available with -V)	109.00

SEE LEGACY ADDENDUM ON PAGE 369 FOR MORE INFORMATION

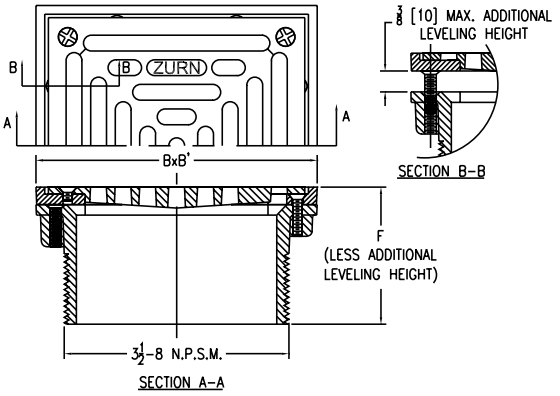

*Regularly furnished unless otherwise specified.
Items designated as Best Sellers are most specified and are generally in stock for shipment.
This symbol denotes a product that is engineered to reduce installation and rework time.

Z400-SR FLOOR DRAIN STABILIZER RING

Patented

ENGINEERING SPECIFICATION

Zurn Z400-SR floor drain stabilizer ring features Dura-Coated cast iron ring with four 1/4"-20 x 1/2" securing screws, four 1/4"-20 x 1-1/2" securing screws, and four 3/8"-16 x 7" long threaded rods. Stabilizer ring is designed to accommodate 2", 3", and 4" pipe and used with 8-3/8" diameter (Z415) drain body.

A Pipe Size inches [mm]	Approximate Weight lb [kg]
2 [51], 3 [76], 4 [102]	3 [1]

PREFIXES	DESCRIPTION	A PIPE SIZE	LIST PRICE
Z400-SR*	Stabilizer Ring	2", 3", 4"	**121.00**

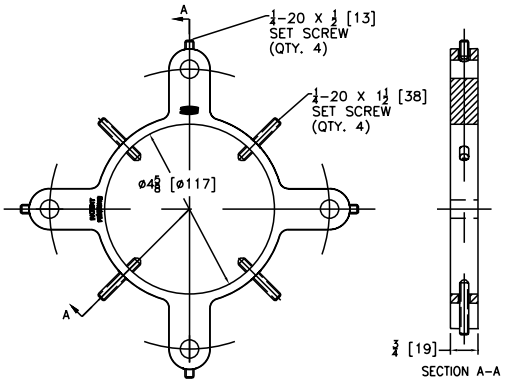

Z400-U ADJUSTABLE STRAINER EXTENSION

ENGINEERING SPECIFICATION

Zurn Z400-U "Type U" adjustable strainer extension is used as a drain extension, but also as a hub drain.

Product Designation	Size inch [mm]	Approximate Weight lb [kg]
-U	3-1/2 [89]	2 [1]

PREFIXES	DESCRIPTION	A PIPE SIZE	LIST PRICE
Z400-U*	D.C.C.I.	3-1/2"	**140.00**
ZN400-U	Cast Nickel Bronze Body	3-1/2"	**263.00**
BEST SELLER			**LIST PRICE**
Z400-U			**140.00**

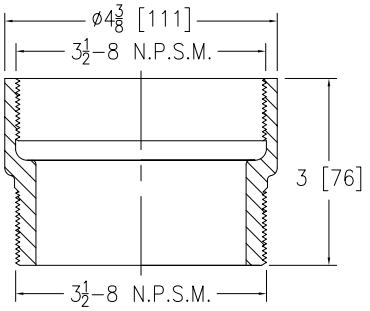

Z400-18 LEVELING RING

ENGINEERING SPECIFICATION

Zurn Z400-18 with Dura-Coated cast iron tapered ring can level Z415 clamp collar for 1/8" out-of-level conditions.

PREFIXES	DESCRIPTION	LIST PRICE
Z400-18*	Leveling Ring	**37.00**

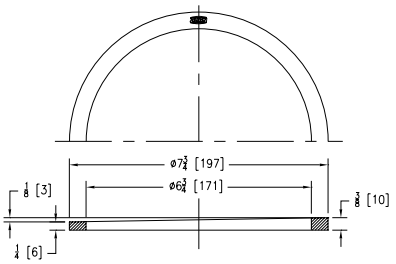

*Regularly furnished unless otherwise specified.

Items designated as Best Sellers are most specified and are generally in stock for shipment.

This symbol denotes a product that is engineered to reduce installation and rework time.

For additional product information, please visit www.zurn.com

Z499B ROUND PROTECTIVE COVER FOR FLOOR DRAINS

ENGINEERING SPECIFICATION

Zurn Z499B floor drain protective cover features galvanized carbon steel plate with slotted screw holes to allow rotational assembly and removal without disengaging the strainer screws. Designed for use with standard ZB and ZN400 'Type B' strainer assemblies.

PREFIXES	DESCRIPTION	PRODUCT DESIGNATION	LIST PRICE
Z499B*	Floor Drain Protective Cover	-5, -6, -7, -8, -10	64.00

Product Designation	No. of Screw Slots	Diameter A inch [mm]	B RBC inch [mm]
-5	3	5-3/16 [132]	2-1/4 [57]
-6		6-3/16 [157]	2-3/4 [70]
-7		7 [178]	3-1/8 [79]
-8		8 [203]	3-5/8 [92]
-10	4	9-5/8 [244]	4-1/8 [104]

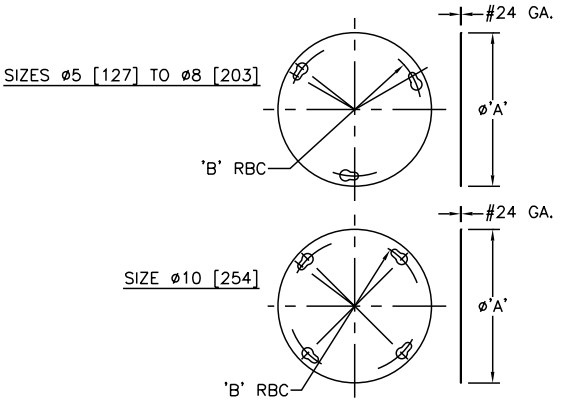

Z499S SQUARE PROTECTIVE COVER FOR FLOOR DRAINS

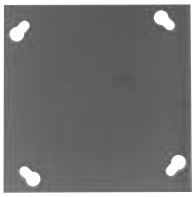

ENGINEERING SPECIFICATION

Zurn Z499S floor drain protective cover features galvanized carbon steel plate with slotted screw holes to allow rotational assembly and removal without disengaging the strainer screws. Designed for use with standard ZB and ZN400 'Type S' strainer assemblies.

PREFIXES	DESCRIPTION	PRODUCT DESIGNATION	LIST PRICE
Z499S*	Floor Drain Protective Cover	-5, -6, -7, -8, -10	64.00

Product Designation	No. of Screw Slots	Diameter A inch [mm]	B RBC inch [mm]
-5	4	5 [127]	3-7/8 [98]
-6		6 [152]	4-7/8 [124]
-7		7 [178]	6 [152]
-8		8 [203]	7-1/8 [181]
-9		9 [229]	
-10		10 [254]	

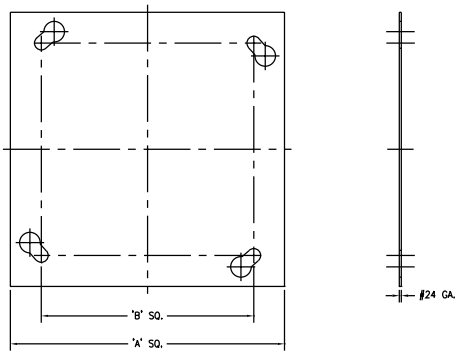

For additional product information, please visit www.zurn.com

**Regularly furnished unless otherwise specified.*
Items designated as Best Sellers are most specified and are generally in stock for shipment.
This symbol denotes a product that is engineered to reduce installation and rework time.

Z415-BZ1 BODY ASSEMBLY W/ "TYPE B" STRAINER AND EZ1™ TECHNOLOGY

Patent Pending

ENGINEERING SPECIFICATION

Zurn Z415-BZ1 floor and shower drain features Dura-coated cast iron body with bottom outlet, combination invertible membrane clamp and adjustable collar with seepage slots, and top assembly. EZ1 drainage series is engineered to simplify product installation, comprised of concrete shield, up to 1" [25] of vertical post pour adjustment, pre-packaged shims for tilt correction and integrated self-contained "Type B" light duty strainer with rough-in cover for protection during concrete pour.

NOTES

Minimum K dimension only with -LR option for 6" and 8"

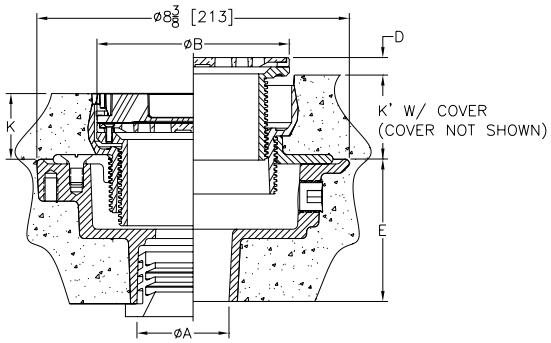

Strainer Designation	Dimensions in inches								Strainer Open Area Sq. In [cm²]	Approximate Weight lb [kg]
	A Pipe Size	B Strainer Dia.	D		K		K'			
			Min.	Max.	Min.	Max.	Min.	Max.		
-5B	2-3 [51-76]	5 [127]	0	1 [25]	1-25/32 [45]	2-31/32 [75]	2-9/32 [58]	3-15/32 [88]	6-1/4 [40]	16 [7]
-6B	2-3-4 [51-76-102]	6 [152]	0	1 [25]	1-13/16 [46]	3 [76]	2-5/16 [59]	3-1/2 [89]	9 [58]	19 [9]
-8B	3-4 [76-102]	8 [203]	0	31/32 [25]	2-5/32 [55]	3-11/32 [85]	2-21/32 [67]	3-27/32 [98]	20 [129]	24 [11]
-8B	6 [152]	8 [203]	0	31/32 [25]	2-5/32 [55]	3-11/32 [85]	2-21/32 [67]	3-27/32 [98]	20 [129]	26 [12]

PREFIXES	DESCRIPTION	STRAINER DESIG.	PIPE SIZE	LIST PRICE
ZN415-BZ1*	D.C.C.I. Body Assembly with Polished Nickel Bronze Top	–5B	2", 3"	484.00
		–6B	2", 3", 4"	592.00
		–8B	3", 4"	851.00
			6"	1,396.00
ZB415-BZ1	D.C.C.I. Body Assembly with Polished Bronze Top	–5B	2", 3"	460.00
		–6B	2", 3", 4"	535.00
		–8B	3", 4"	807.00
			6"	1,351.00
ZS415-BZ1	D.C.C.I. Body Assembly with Stainless Steel Top	–5B	2", 3"	1,042.00
		–6B	2", 3", 4"	1,298.00
		–8B	3", 4"	1,754.00
			6"	2,299.00

OUTLETS (SPECIFY PIPE SIZE IN INCHES AND TYPE OF OUTLET)				
OUTLET TYPE		PIPE SIZE/ OUTLET TYPE	E BODY HT. DIM.	ADD
IC	Inside Caulk	2IC, 3IC, 4IC	4-3/16"	N/C
IP	Threaded	2IP	2-7/16"	80.00
		3IP	2-3/4"	80.00
		4IP	2-13/16"	80.00
		6IP	2-7/8"	80.00
NH	No-Hub	2NH, 3NH, 4NH	3-13/16"	N/C
NL	Neo-Loc	2NL, 3NL, 4NL	3-7/8"	N/C

SUFFIXES			ADD
–AR	Acid Resisting Epoxy Coated Cast Iron		171.00
–EF	3/4" Extension Frame		299.00
–G	Galvanized Cast Iron		198.00
–LR	Low Rough-In (For 6" & 8" Only)		N/C
–P	Trap Primer Connection (Specify 1/2"*)		N/C
–SA	Stabilizer Assembly (See Z1035)		138.00
–SQ	Stabilizer Q-deck (See Z1035-Q)		184.00
–SR	Stabilizer Ring (See Z400-SR)		121.00
–TC	Neo-Loc Test Cap Gasket (2", 3", 4" NL Bottom Outlet Only)		24.00
–TSP	Trap Seal Protection Device (Size Matches Drain Outlet Selected, See Z1072)		POA
–U	2"-3-1/4" High Extension Adapter	D.C.	140.00
		Galv.	306.00
–UP	1-3/4" Pre-Pour Adjustment Extension Adapter		140.00
–VP	Vandal-Proof Secured Top		58.00
–Y	Sediment Bucket		109.00

BEST SELLERS	LIST PRICE
ZN415-2NH-BZ1	484.00
ZN415-3NH-BZ1	484.00
ZN415-3NH-6BZ1	592.00

**Regularly furnished unless otherwise specified.*

Items designated as Best Sellers are most specified and are generally in stock for shipment.

This symbol denotes a product that is engineered to reduce installation and rework time.

For additional product information, please visit www.zurn.com

Z415-SZ1 BODY ASSEMBLY W/ "TYPE S" STRAINER AND EZ1™ TECHNOLOGY

Patent Pending

ENGINEERING SPECIFICATION

Zurn Z415-SZ1 floor and shower drain features Dura-coated cast iron body with bottom outlet, combination invertible membrane clamp, and adjustable collar with seepage slots and top assembly. EZ1 drainage series is engineered to simplify product installation, comprised of concrete shield, up to 1" [25] of vertical post pour adjustment, pre-packaged shims for tilt correction and integrated self-contained "Type S" nickel bronze light duty strainer with rough-in cover for protection during concrete pour.

NOTES

Minimum K dimension only with -LR option

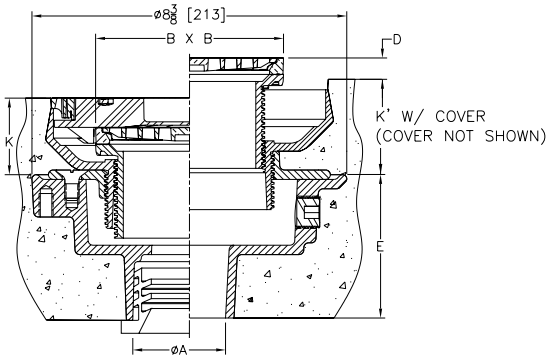

Strainer Designation	Dimensions in inches								Strainer Open Area Sq. In [cm²]	Approximate Weight lb [kg]
	A Pipe Size	BxB Strainer Top Size	D		K		K'			
			Min.	Max.	Min.	Max.	Min.	Max.		
-5S	2-3 [51-76]	5 X 5 [127 X 127]	0	1 [25]	2-1/16 [52]	3-1/4 [83]	2-9/16 [65]	3-3/4 [95]	9 [58]	19 [9]
-6S	2-3-4 [51-76-102]	6 X 6 [152 X 152]	0	1 [25]	2-1/8 [54]	3-5/16 [84]	2-5/8 [67]	3-13/16 [97]	13 [84]	22 [10]
-8S	3-4 [76-102]	8 X 8 [203 X 203]	0	15/16 [24]	2-1/2 [64]	3-11/16 [94]	3 [76]	4-3/16 [106]	27 [174]	27 [12]
-8S	6 [152]	8 X 8 [203 X 203]	0	15/16 [24]	2-1/2 [64]	3-11/16 [94]	3 [76]	4-3/16 [106]	27 [174]	28 [13]

PREFIXES	DESCRIPTION	STRAINER DESIG.	PIPE SIZE	LIST PRICE
ZN415-SZ1*	D.C.C.I. Body Assembly with Polished Nickel Bronze Top	–5S	2", 3"	645.00
		–6S	2", 3", 4"	719.00
		–8S	3", 4"	1,042.00
ZB415-SZ1	D.C.C.I. Body Assembly with Polished Bronze Top	–5S	2", 3"	592.00
		–6S	2", 3", 4"	680.00
		–8S	3", 4"	946.00
ZS415-SZ1	D.C.C.I. Body Assembly with Stainless Steel Top	–5S	2", 3"	1,091.00
		–6S	2", 3", 4"	1,337.00
		–8S	3", 4"	1,812.00

OUTLETS (SPECIFY PIPE SIZE IN INCHES AND TYPE OF OUTLET)

OUTLET TYPE		PIPE SIZE/ OUTLET TYPE	E BODY HT. DIM.	ADD
IC	Inside Caulk	2IC, 3IC, 4IC	4-3/16"	N/C
IP	Threaded	2IP	2-7/16"	80.00
		3IP	2-3/4"	80.00
		4IP	2-13/16"	80.00
		6IP	2-7/8"	80.00
NH	No-Hub	2NH, 3NH, 4NH	3-13/16"	N/C
NL	Neo-Loc	2NL, 3NL, 4NL	3-7/8"	N/C

SUFFIXES			ADD
–AR	Acid Resisting Epoxy Coated Cast Iron		171.00
◷ –EF	3/4" Extension Frame		281.00
–G	Galvanized Cast Iron		185.00
–LR	Low Rough-In		N/C
–P	Trap Primer Connection (Specify 1/2"*)		N/C
◷ –SA	Stabilizer Assembly (See Z1035)		138.00
◷ –SQ	Stabilizer Q-deck (See Z1035-Q)		184.00
◷ –SR	Stabilizer Ring (See Z400-SR)		121.00
◷ –TC	Neo-Loc Test Cap Gasket (2", 3", 4" NL Bottom Outlet Only)		22.00
–TSP	Trap Seal Protection Device (Size Matches Drain Outlet Selected, See Z1072)		POA
–U	2"-3-1/4" High Extension Adapter	D.C.	140.00
		Galv.	306.00
–UP	1-3/4" Pre-Pour Adjustment Extension Adapter		140.00
–VP	Vandal-Proof Secured Top		58.00
–Y	Sediment Bucket		102.00

For additional product information, please visit www.zurn.com

**Regularly furnished unless otherwise specified.*

Items designated as Best Sellers are most specified and are generally in stock for shipment.

◷ This symbol denotes a product that is engineered to reduce installation and rework time.

Z415-BZ1-DP BODY ASSEMBLY W/ "TYPE B" STRAINER, DECK PLATE AND EZ1™ TECHNOLOGY

Patent Pending

ENGINEERING SPECIFICATION

Zurn Z415-BZ1-DP floor and shower drain features Dura-Coated cast iron body with bottom outlet, stainless steel deck plate and top assembly. EZ1 drainage series is engineered to simplify product installation, comprised of concrete shield to provide up to 1" [25] of vertical post pour adjustment, pre-packaged shims for tilt correction, and integrated, self-contained "Type B" light duty strainer with rough-in cover for protection during concrete pour.

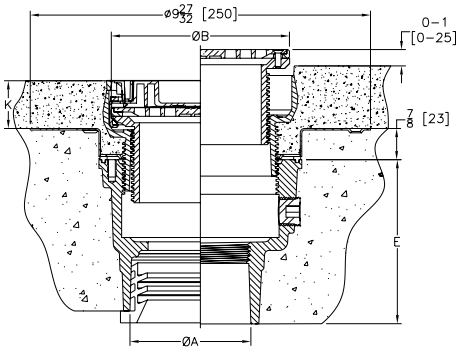

Strainer Designation	Dimensions in inches				Strainer Open Area Sq. In [cm²]	Approximate Weight lb [kg]
	A Pipe Size	B Strainer Diameter	K			
			Min.	Max.		
-5B	2-3-4 [51-76-102]	5 [127]	29/32 [23]	1-13/16 [46]	6-1/4 [40]	14 [6]

PREFIXES	DESCRIPTION	STRAINER DESIG.	PIPE SIZE	LIST PRICE
ZN415-5BZ1-DP*	D.C.C.I. Body Assembly with Polished Nickel Bronze Top	–5B	2", 3", 4"	604.00
ZB415-5BZ1-DP	D.C.C.I. Body Assembly with Polished Bronze Top	–5B	2", 3", 4"	581.00
ZS415-5BZ1-DP	D.C.C.I. Body Assembly with Stainless Steel Top	–5B	2", 3", 4"	1,113.00

OUTLETS (SPECIFY PIPE SIZE IN INCHES AND TYPE OF OUTLET)				
OUTLET TYPE		PIPE SIZE/ OUTLET TYPE	E BODY HT. DIM.	ADD
NH	No-Hub	2NH, 3NH	4-3/4"	N/C
		4NH	4-3/8"	N/C
NL	Neo-Loc	2NL	5-1/4"	N/C
		3NL, 4NL	4-3/8"	N/C

SUFFIXES			ADD
–AR	Acid Resisting Epoxy Coated Cast Iron		159.00
–CC	Stainless Steel Clamp Collar		55.00
–EF	3/4" Extension Frame		281.00
–G	Galvanized Cast Iron		185.00
–P	Trap Primer Connection (1/2"*)		N/C
–TC	Neo-Loc Test Cap Gasket (2", 3", 4" NL Bottom Outlet Only)		22.00
–TSP	Trap Seal Protection Device (Size Matches Drain Outlet Selected, Not Available in 4", See Z1072)		POA
–U	2"-3-1/4" High Extension Adapter	D.C.	140.00
		Galv.	306.00
–UP	1-3/4" Pre-Pour Adjustment Extension Adapter		140.00
–VP	Vandal-Proof Secured Top		58.00
–Y	Sediment Bucket		102.00

**Regularly furnished unless otherwise specified.*

Items designated as Best Sellers are most specified and are generally in stock for shipment.

This symbol denotes a product that is engineered to reduce installation and rework time.

For additional product information, please visit www.zurn.com

Z415-SZ1-DP BODY ASSEMBLY W/ "TYPE S" STRAINER, DECK PLATE AND EZ1™ TECHNOLOGY

Patent Pending

ENGINEERING SPECIFICATION

Zurn Z415-SZ1-DP floor and shower drain features Dura-Coated cast iron body with bottom outlet, stainless steel deck plate, and top assembly. EZ1 drainage series is engineered to simplify product installation, comprised of concrete shield to provide up to 1" [25] of vertical post pour adjustment, pre-packaged shims for tilt correction, and integrated, self-contained "Type S" light duty strainer with rough-in cover for protection during concrete pour.

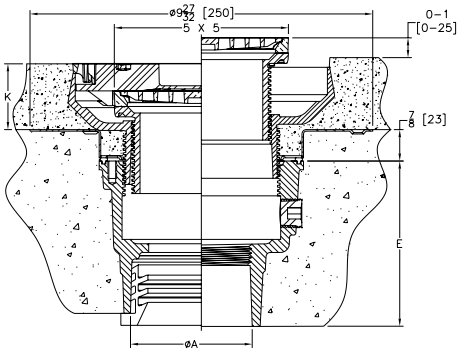

Strainer Designation	Dimensions in inches				Strainer Open Area Sq. In [cm²]	Approximate Weight lb [kg]
	A Pipe Size	BxB Strainer Top Size	K			
			Min.	Max.		
-5S	2-3-4 [51-76-102]	5 X 5 [127 X127]	1-15/16 [49]	2-3/32 [53]	9 [58]	16 [7]

PREFIXES	DESCRIPTION	STRAINER DESIG.	PIPE SIZE	LIST PRICE
ZN415-5SZ1-DP*	D.C.C.I. Body Assembly with Polished Nickel Bronze Top	–5S	2", 3", 4"	734.00
ZB415-5SZ1-DP	D.C.C.I. Body Assembly with Polished Bronze Top	–5S	2", 3", 4"	730.00
ZS415-5SZ1-DP	D.C.C.I. Body Assembly with Stainless Steel Top	–5S	2", 3", 4"	1,265.00

OUTLETS (SPECIFY PIPE SIZE IN INCHES AND TYPE OF OUTLET)				
OUTLET TYPE		PIPE SIZE/ OUTLET TYPE	E BODY HT. DIM.	ADD
NH	No-Hub	2NH, 3NH	4-3/4"	N/C
		4NH	4-3/8"	N/C
NL	Neo-Loc	2NL	5-1/4"	N/C
		3NL, 4NL	4-3/8"	N/C

SUFFIXES			ADD
–AR	Acid Resisting Epoxy Coated Cast Iron		159.00
–CC	Stainless Steel Clamp Collar		55.00
–EF	3/4" Extension Frame		281.00
–G	Galvanized Cast Iron		185.00
–P	Trap Primer Connection (1/2"*)		N/C
–TC	Neo-Loc Test Cap Gasket (2", 3", 4" NL Bottom Outlet Only)		22.00
–TSP	Trap Seal Protection Device (Size Matches Drain Outlet Selected, Not Available in 4", See Z1072)		POA
–U	2"-3-1/4" High Extension Adapter	D.C.	140.00
		Galv.	306.00
–UP	1-3/4" Pre-Pour Adjustment Extension Adapter		140.00
–VP	Vandal-Proof Secured Top		58.00
–Y	Sediment Bucket		102.00

For additional product information, please visit www.zurn.com

**Regularly furnished unless otherwise specified.*

Items designated as Best Sellers are most specified and are generally in stock for shipment.

This symbol denotes a product that is engineered to reduce installation and rework time.

Z415B-DP BODY ASSEMBLY W/ "TYPE B" STRAINER AND DECK PLATE

Patent Pending

ENGINEERING SPECIFICATION

Zurn Z415B-DP floor and shower drain features Dura-Coated cast iron body with bottom outlet, stainless steel deck plate, and "Type B" polished nickel bronze light duty top assembly.

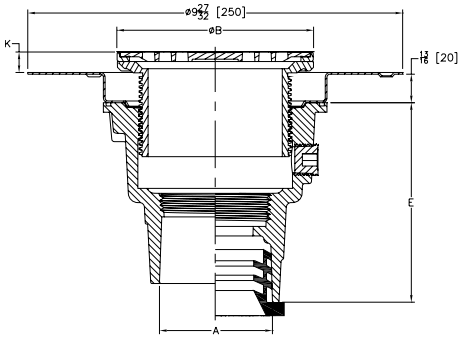

Strainer Designation	Dimensions in inches				Strainer Open Area Sq. In [cm²]	Approximate Weight lb [kg]
	A Pipe Size	B Strainer Diameter	K			
			Min.	Max.		
-5B	2-3-4 [51-76-102]	5 [127]	0	1-7/16 [37]	6-1/4 [40]	11 [5]

PREFIXES	DESCRIPTION	STRAINER DESIG.	PIPE SIZE	LIST PRICE
ZN415-B-DP*	D.C.C.I. Body Assembly with Polished Nickel Bronze Top	–5B	2", 3", 4"	604.00
ZB415-B-DP	D.C.C.I. Body Assembly with Polished Bronze Top	–5B	2", 3", 4"	581.00
ZS415-B-DP	D.C.C.I. Body Assembly with Stainless Steel Top	–5B	2", 3", 4"	1,113.00

OUTLETS (SPECIFY PIPE SIZE IN INCHES AND TYPE OF OUTLET)				
OUTLET TYPE		PIPE SIZE/ OUTLET TYPE	E BODY HT. DIM.	ADD
NH	No-Hub	2NH	4-7/8"	N/C
		3NH	4-3/4"	N/C
		4NH	4"	N/C
NL	Neo-Loc	2NL	5-1/4"	N/C
		3NL	4-3/8"	N/C
		4NL	4-3/8"	N/C

SUFFIXES			ADD
–AR	Acid Resisting Epoxy Coated Cast Iron		159.00
–CC	Stainless Steel Clamp Collar		55.00
–EF	3/4" Extension Frame		281.00
–FI	Floor Insert		58.00
–G	Galvanized Cast Iron		185.00
–P	Trap Primer Connection (1/2"*)		NC
–TC	Neo-Loc Test Cap Gasket (2", 3", 4" NL Bottom Outlet Only)		22.00
–U	2"-3-1/4" High Extension Adapter	D.C.	140.00
		Galv.	306.00
–VP	Vandal-Proof Secured Top		58.00
–Y	Sediment Bucket		102.00

*Regularly furnished unless otherwise specified.

Items designated as Best Sellers are most specified and are generally in stock for shipment.

This symbol denotes a product that is engineered to reduce installation and rework time.

For additional product information, please visit www.zurn.com

Z415S-DP BODY ASSEMBLY W/ "TYPE S" STRAINER AND DECK PLATE

Patent Pending

ENGINEERING SPECIFICATION

Zurn Z415S-DP floor and shower drain, Dura-Coated cast iron body with bottom outlet, stainless steel deck plate, and "Type S" polished nickel bronze light duty top assembly.

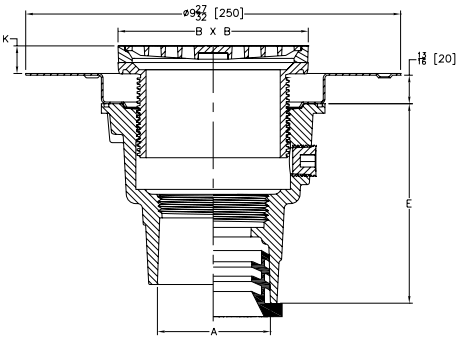

Strainer Designation	Dimensions in inches				Strainer Open Area Sq. In [cm²]	Approximate Weight lb [kg]
	A Pipe Size	BxB Strainer Top Size	K			
			Min.	Max.		
-5S	2-3-4 [51-76-102]	5 X 5 [127 X 127]	7/16 [11]	1-7/16 [37]	9 [58]	12 [5]

PREFIXES	DESCRIPTION	STRAINER DESIG.	PIPE SIZE	LIST PRICE
ZN415-S-DP*	D.C.C.I. Body Assembly with Polished Nickel Bronze Top	–5S	2", 3", 4"	734.00
ZB415-S-DP	D.C.C.I. Body Assembly with Polished Bronze Top	–5S	2", 3", 4"	730.00
ZS415-S-DP	D.C.C.I. Body Assembly with Stainless Steel Top	–5S	2", 3", 4"	1,265.00

OUTLETS (SPECIFY PIPE SIZE IN INCHES AND TYPE OF OUTLET)				
OUTLET TYPE		PIPE SIZE/ OUTLET TYPE	E BODY HT. DIM.	ADD
NH	No-Hub	2NH	4-7/8"	N/C
		3NH	4-3/4"	N/C
		4NH	4"	N/C
NL	Neo-Loc	2NL	5-1/4"	N/C
		3NL	4-3/8"	N/C
		4NL	4-3/8"	N/C

SUFFIXES			ADD
–AR	Acid Resisting Epoxy Coated Cast Iron		159.00
–CC	Stainless Steel Clamp Collar		55.00
–EF	3/4" Extension Frame		281.00
–G	Galvanized Cast Iron		185.00
–P	Trap Primer Connection (1/2"*)		N/C
–TC	Neo-Loc Test Cap Gasket (2", 3", 4" NL Bottom Outlet Only)		22.00
–U	2"-3-1/4" High Extension Adapter	D.C.	140.00
		Galv.	306.00
–VP	Vandal-Proof Secured Top		58.00
–Y	Sediment Bucket		102.00

For additional product information, please visit www.zurn.com

**Regularly furnished unless otherwise specified.*

Items designated as Best Sellers are most specified and are generally in stock for shipment.

This symbol denotes a product that is engineered to reduce installation and rework time.

Z415 BODY ASSEMBLY WITH HEEL-PROOF "TYPE B" STRAINER

ENGINEERING SPECIFICATION

Zurn ZN415B floor and shower drain features Dura-Coated cast iron body with bottom outlet, combination invertible membrane clamp and adjustable collar with seepage holes, and "TYPE B" polished nickel bronze, light-duty strainer.

NOTES

For other available strainer variations see Z400 Strainer Series. Add price for required strainer to "BODY ONLY" price in chart. Specify type and size required.

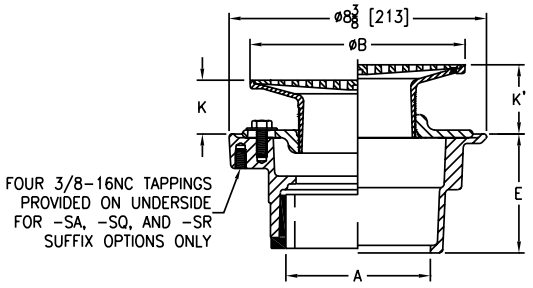

Strainer Designation	Dimensions in inches [mm]						Str. Open Area sq in [cm²]	Approximate Weight lb [kg]
	A Pipe Size	B Diameter	K		K			
			Min.	Max.	Min.	Max.		
-5B	2 [51], 3 [76]	5 [127]	1 [25]	1-1/2 [38]	1-3/32 [27]	2-1/4 [57]	6-1/4 [40]	11 [5]
-6B	2 [51], 3 [76], 4 [102]	6 [152]		1-25/32 [45]	1-13/32 [36]	2-17/32 [64]	9 [58]	13 [6]
-7B		7 [178]		2-1/8 [54]	1-23/32 [44]	2-7/8 [73]	12 [77]	14 [6]
-8B	3 [76], 4 [102]	8 [203]	1-5/32 [29]		1-3/4 [44]		19 [122]	16 [7]
	6 [152]							18 [8]
-10B		10 [254]	1-7/16 [37]	2-1/2 [64]	2 [51]	3-1/4 [83]	23 [148]	22 [10]

PREFIXES	DESCRIPTION	STRAINER DESIG.	PIPE SIZE	LIST PRICE
ZN415*	D.C.C.I. Body Assembly with Polished Nickel Bronze Top	–5B	2″, 3″	484.00
		–6B	2″, 3″, 4″	592.00
		–7B	2″, 3″, 4″	680.00
		–8B	3″, 4″	851.00
			6″	1,396.00
		–10B	6″	1,708.00
ZB415	D.C.C.I. Body Assembly with Polished Bronze Top	–5B	2″, 3″	460.00
		–6B	2″, 3″, 4″	535.00
		–7B	2″, 3″, 4″	646.00
		–8B	3″, 4″	807.00
			6″	1,351.00
		–10B	6″	1,647.00
Z415	D.C.C.I. Body Assembly ONLY (add "-L/Top" to product sku)	No Strainer	2″, 3″, 4″	194.00
			6″	739.00

OUTLETS (SPECIFY PIPE SIZE IN INCHES AND TYPE OF OUTLET)				
OUTLET TYPE		PIPE SIZE/ OUTLET TYPE	E BODY HT. DIM.	ADD
IC	Inside Caulk	2IC, 3IC, 4IC	4-3/16″	N/C
IP	Threaded	2IP	2-7/16″	80.00
		3IP	2-3/4″	80.00
		4IP	2-13/16″	80.00
		6IP	2-7/8″	80.00
NH	No-Hub	2NH, 3NH, 4NH	3-13/16″	N/C
NL	Neo-Loc	2NL, 3NL, 4NL	3-7/8″	N/C

SUFFIXES			ADD
–AR	Acid Resisting Epoxy Coated Cast Iron		171.00
–CP	Chrome-Plated Bronze Top		26.00
–G	Galvanized Cast Iron		198.00
–HD	Heavy-Duty Slotted Grate (ZN 5″ and 6″ sizes only)		206.00
–OF	Oval Funnel - 6″ thru 10″ Strainers Only (See Z329-7)	ZB	365.00
		ZN	421.00
–P	Trap Primer Connection (1/2″*)		N/C
◷ –PC	Protective Cover		64.00
◷ –SA	Stabilizer Assembly (See Z1035)		138.00
◷ –SQ	Stabilizer Q-deck (See Z1035-Q)		184.00
◷ –SR	Stabilizer Ring (See Z400-SR)		121.00
◷ –TC	Neo-Loc Test Cap Gasket (2″, 3″, 4″ NL Bottom Outlet Only)		24.00
–TSP	Trap Seal Protection Device (Size Matches Drain Outlet Selected, See Z1072)		POA
–U	1″-3″ High Extension Adapter (See Z400-U)	D.C.	140.00
		Galv.	306.00
	For each additional 1″ above 3″		98.00
–V	Backwater Valve (Not Available with -Y)		380.00
–VP	Vandal-Proof Secured Top		58.00
–Y	Sediment Bucket (Not Available with -V)		109.00
–4	4″ Diameter Funnel	ZB	365.00
		ZN	421.00
–90	90° Threaded Side Outlet Body (2″ and 3″ Only)		219.00

BEST SELLERS	LIST PRICE
ZB415-2NH-5B	460.00
ZB415-2NH-5B-CP	486.00
ZB415-2NH-5B-P	460.00
ZB415-2NL-5B	460.00
ZN415-2IP-5B	564.00
ZN415-2NH-5B	484.00
ZN415-2NH-5B-CP	510.00
ZN415-2NH-5B-G	682.00
ZN415-2NL-5B	484.00

BEST SELLERS	LIST PRICE
ZB415-3NH-5B	460.00
ZB415-3NH-5B-P	460.00
ZN415-3NH-5B-P	484.00
ZB415-3NH-6B	535.00
ZN415-2NH-6B	592.00
ZN415-2NH-6B-P	592.00
ZB415-3NH-7B-SA	771.00
ZN415-2NH-7B	680.00

**Regularly furnished unless otherwise specified.*

Items designated as Best Sellers are most specified and are generally in stock for shipment.

◷ This symbol denotes a product that is engineered to reduce installation and rework time.

For additional product information, please visit www.zurn.com

ZS415 BODY ASSEMBLY WITH "TYPE BS" STRAINER

ENGINEERING SPECIFICATION

Zurn ZS415BS floor and shower drain features Dura-Coated cast iron body with bottom outlet, combination invertible membrane clamp and adjustable collar with seepage slots, and "TYPE BS" stainless steel heel-proof, medium-duty strainer assembly.

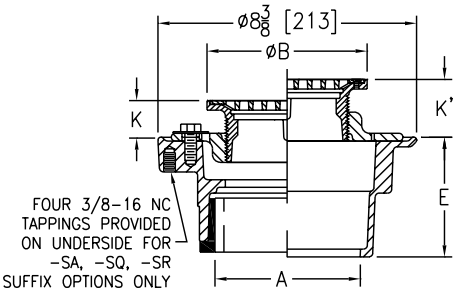

Strainer Designation	Dimensions in inches [mm]						Str. Open Area sq in [cm²]	Approximate Weight lb [kg]
	A Pipe Size	B Diameter	K		K'			
			Min.	Max.	Min.	Max.		
-5BS	2 [51], 3 [76]	5 [127]	1 [25]	1-1/2 [38]	1-3/32 [27]	2-1/4 [57]	6-3/4 [44]	10 [5]
-6BS	2 [51], 3 [76], 4 [102]	6 [152]		1-25/32 [45]	1-13/32 [36]	2-17/32 [64]	10-1/2 [68]	11 [5]
-7BS		7 [178]		2-1/8 [54]	1-23/32 [44]	2-7/8 [73]	15 [97]	12 [5]
-8BS	3 [76], 4 [102]	8 [203]	1-5/32 [29]		1-3/4 [44]		20 [129]	13 [6]
	6 [152]							15 [7]
-10BS		10 [254]	1-7/16 [37]	2-1/2 [64]	2 [51]	3-1/4 [83]	26-1/2 [171]	17 [8]

PREFIXES	DESCRIPTION	STRAINER DESIG.	PIPE SIZE	LIST PRICE
ZS415*	D.C.C.I. Body Assembly with Type 304 Stainless Steel Top	–5BS	2", 3"	1,042.00
		–6BS	2", 3", 4"	1,298.00
		–7BS	2", 3", 4"	1,680.00
		–8BS	3", 4"	1,754.00
			6"	2,299.00
		–10BS	6"	2,643.00
ZM415	D.C.C.I. Body Assembly with Type 316 (CF8M) Stainless Steel Top	–5BS	2", 3"	POA
		–6BS	2", 3", 4"	POA
		–7BS	2", 3", 4"	POA
		–8BS	3", 4"	POA
			6"	POA
		–10BS	6"	POA

OUTLETS (SPECIFY PIPE SIZE IN INCHES AND TYPE OF OUTLET)

OUTLET TYPE		PIPE SIZE/ OUTLET TYPE	E BODY HT. DIM.	ADD
IC	Inside Caulk	2IC, 3IC, 4IC	4-3/16"	N/C
IP	Threaded	2IP	2-7/16"	80.00
		3IP	2-3/4"	80.00
		4IP	2-13/16"	80.00
		6IP	2-7/8"	80.00
NH	No-Hub	2NH, 3NH, 4NH	3-13/16"	N/C
NL	Neo-Loc	2NL, 3NL, 4NL	3-7/8"	N/C

SUFFIXES			ADD
–AR	Acid Resisting Epoxy Coated Cast Iron		171.00
–G	Galvanized Cast Iron		198.00
–P	Trap Primer Connection (1/2"*)		N/C
◷ –TC	Neo-Loc Test Cap Gasket (2", 3", 4" NL Bottom Outlet Only)		24.00
–TSP	Trap Seal Protection Device (Size Matches Drain Outlet Selected, See Z1072)		POA
–U	1"-3" High Extension Adapter (See Z400-U)	D.C.	140.00
		Galv.	306.00
	For each additional 1" above 3"		98.00
–V	Backwater Valve (Not Available with -Y)		380.00
–VP	Vandal-Proof Secured Top		58.00
–Y	Sediment Bucket (Not Available with -V)		109.00

For additional product information, please visit www.zurn.com

**Regularly furnished unless otherwise specified.*

Items designated as Best Sellers are most specified and are generally in stock for shipment.

◷ This symbol denotes a product that is engineered to reduce installation and rework time.

Z415 BODY ASSEMBLY WITH "TYPE BL" STRAINER

ENGINEERING SPECIFICATION

Zurn ZN415BL floor and shower drain features Dura-Coated cast iron body with bottom outlet, combination invertible membrane clamp and adjustable collar with seepage slots, and "TYPE BL" D.C.C.I. wide flanged head and polished nickel bronze, light-duty strainer.

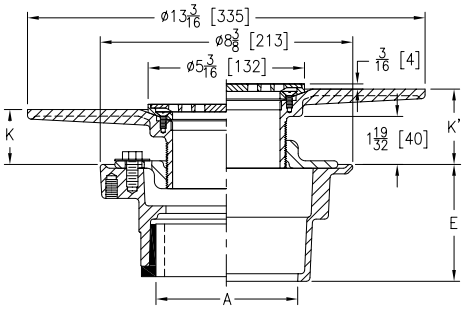

Strainer Designation	Dimensions in inches [mm]					Str. Open Area sq in [cm²]	Approximate Weight lb [kg]
	A Pipe Size	K		K'			
		Min.	Max.	Min.	Max.		
-5BL	2 [51], 3 [76], 4 [102], 5 [127], 6 [152]	7/8 [22]	2-1/4 [57]	1-11/16 [43]	3 [76]	6-1/4 [40]	14 [6]

PREFIXES	DESCRIPTION	STRAINER DESIG.	PIPE SIZE	LIST PRICE
ZN415*	D.C.C.I. Body Assembly with Polished Nickel Bronze Top	–5BL	2", 3", 4", 6"	1,391.00
ZB415	D.C.C.I. Body Assembly with Polished Bronze Top	–5BL	2", 3", 4", 6"	1,336.00
Z415	D.C.C.I. Body Assembly ONLY (add "-L/Top" to product sku)	No Strainer	2", 3", 4",	194.00
			6"	739.00

OUTLETS (SPECIFY PIPE SIZE IN INCHES AND TYPE OF OUTLET)				
OUTLET	TYPE	PIPE SIZE/ OUTLET TYPE	E BODY HT. DIM.	ADD
IC	Inside Caulk	2IC, 3IC, 4IC	4-3/16"	N/C
IP	Threaded	2IP	2-7/16"	80.00
		3IP	2-3/4"	80.00
		4IP	2-13/16"	80.00
		6IP	2-7/8"	80.00
NH	No-Hub	2NH, 3NH, 4NH	3-13/16"	N/C
NL	Neo-Loc	2NL, 3NL, 4NL	3-7/8"	N/C

SUFFIXES			ADD
–AR	Acid Resisting Epoxy Coated Cast Iron		393.00
–CP	Chrome-Plated Bronze Top		26.00
–G	Galvanized Cast Iron		351.00
–P	Trap Primer Connection (1/2"*)		N/C
◷ –PC	Protective Cover		64.00
◷ -SA	Stabilizer Assembly (See Z1035)		138.00
◷ –TC	Neo-Loc Test Cap Gasket (2", 3", 4" NL Bottom Outlet Only)		24.00
–U	1"-3" High Extension Adapter (See Z400-U)	D.C.	140.00
		Galv.	362.00
	For each additional 1" above 3"		98.00
–VP	Vandal-Proof Secured Top		58.00
–Y	Sediment Bucket		109.00
–90	90° Threaded Side Outlet Body Assembly (2" and 3" Only)		219.00

BEST SELLERS	LIST PRICE
ZN415-2NH-5BL	1,391.00
ZN415-2NH-5BL-P	1,391.00
ZN415-2NL-5BL	1,391.00

**Regularly furnished unless otherwise specified.*

Items designated as Best Sellers are most specified and are generally in stock for shipment.

◷ This symbol denotes a product that is engineered to reduce installation and rework time.

For additional product information, please visit www.zurn.com

Z415 BODY ASSEMBLY WITH "TYPE BZ" LEVELING STRAINER

Patented

ENGINEERING SPECIFICATION

Zurn ZN415BZ floor and shower drain features Dura-Coated cast iron body with bottom outlet, combination invertible membrane clamp and adjustable collar with seepage slots, and "TYPE BZ" polished nickel bronze, light-duty, leveling strainer.

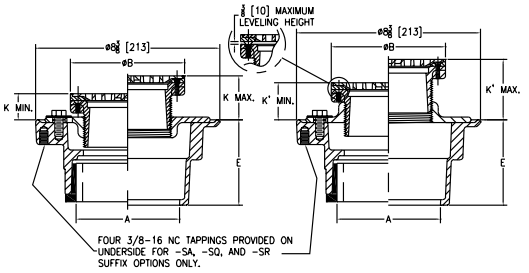

Strainer Designation	Dimensions in inches [mm]						Str. Open Area sq in [cm²]	Approximate Weight lb [kg]
	A Pipe Size	B Strainer Diameter	K		K'			
			Min.	Max.	Min.	Max.		
-5BZ	2 [51], 3 [76]	5-3/16 [132]	1-1/16 [27]	2-1/16 [52]	1-9/16 [40]	2-13/16 [71]	6-1/4 [40]	11 [5]
-6BZ	2 [51], 3 [76], 4 [102]	6-1/4 [159]	1-3/8 [35]	2-7/32 [56]	1-3/4 [44]	2-15/16 [75]	9 [58]	13 [6]

PREFIXES	DESCRIPTION	STRAINER DESIG.	PIPE SIZE	LIST PRICE
ZN415*	D.C.C.I. Body Assembly with Polished Nickel Bronze Top	–5BZ	2", 3"	484.00
		–6BZ	2", 3", 4"	592.00
ZB415	D.C.C.I. Body Assembly with Polished Bronze Top	–5BZ	2", 3"	460.00
		–6BZ	2", 3", 4"	535.00

OUTLETS (SPECIFY PIPE SIZE IN INCHES AND TYPE OF OUTLET)				
OUTLET TYPE		PIPE SIZE/ OUTLET TYPE	E BODY HT. DIM.	ADD
IC	Inside Caulk	2IC, 3IC, 4IC	4-13/16"	N/C
IG	Inside Gasket	2IG, 3IG, 4IG	4-13/16"	N/C
IP	Threaded	2IP	2-7/16"	80.00
		3IP	2-3/4"	80.00
		4IP	2-13/16"	80.00
NH	No-Hub	2NH, 3NH, 4NH	3-13/16"	N/C
NL	Neo-Loc	2NL, 3NL, 4NL	3-7/8"	N/C

SUFFIXES			ADD
–AA	All Acid Resisting Epoxy		261.00
–AR	Acid Resisting Epoxy Coated Cast Iron		171.00
–CP	Chrome-Plated Bronze Top		26.00
–DP	Decorative Polished Top		171.00
–G	Galvanized Cast Iron		198.00
–OF	Oval Funnel - 6" Strainer Only (See Z329-7)	ZB	365.00
		ZN	421.00
–P	Trap Primer Connection (1/2"*)		N/C
–PC	Protective Cover		64.00
-SA	Stabilizer Assembly (See Z1035)		138.00
-SQ	Stabilizer Q-deck (See Z1035-Q)		184.00
–SR	Stabilizer Ring (See Z400-SR)		121.00
–TC	Neo-Loc Test Cap Gasket (2", 3", 4" NL Bottom Outlet Only)		24.00
–U	1"-3" High Extension Adapter (See Z400-U)	D.C.	140.00
		Galv.	306.00
	For each additional 1" above 3"		98.00
–V	Backwater Valve (Not Available with -Y)		380.00
–VP	Vandal-Proof Secured Top		58.00
–Y	Sediment Bucket (Not Available with -V)		109.00
–4	4"Diamater Funnel (Z328)	ZB	365.00
		ZN	421.00
–90	90° Threaded Side Outlet Body Assembly (2" and 3" Only)		219.00

BEST SELLERS	LIST PRICE
ZN415-2NL-5BZ-P	484.00
ZN415-2NL-5BZ-P-PC-TC	572.00
ZN415-2NL-6BZ	592.00
ZN415-3NH-5BZ	484.00
ZN415-3NH-5BZ-P	484.00
ZN415-3NH-6BZ	592.00
ZN415-3NH-6BZ-P	592.00
ZN415-3NL-6BZ	592.00
ZN415-3NL-6BZ-P	592.00
ZN415-4NH-6BZ-P	592.00
ZN415-4NL-6BZ	592.00

For additional product information, please visit www.zurn.com

**Regularly furnished unless otherwise specified.*

Items designated as Best Sellers are most specified and are generally in stock for shipment.

This symbol denotes a product that is engineered to reduce installation and rework time.

Z415 BODY ASSEMBLY WITH "TYPE C" STRAINER

ENGINEERING SPECIFICATION

Zurn ZN415C floor and shower drain features Dura-Coated cast iron body with bottom outlet, combination invertible membrane clamp and adjustable collar with seepage slots, and "TYPE C" polished, hinged nickel bronze, light-duty strainer.

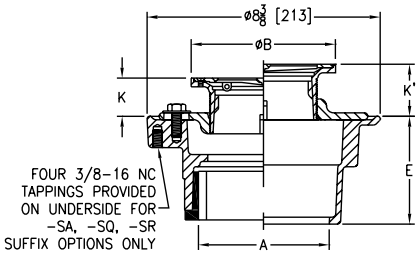

Strainer Designation	Dimensions in inches [mm]						Str. Open Area sq in [cm²]	Approximate Weight lb [kg]
	A Pipe Size	B Diameter	K		K'			
			Min.	Max.	Min.	Max.		
-5C	2 [51], 3 [76]	5 [127]	1 [25]	1-1/2 [38]	1-3/32 [27]	2-1/4 [57]	8 [52]	11 [5]
-6C	2 [51], 3 [76], 4 [102]	6 [152]		1-25/32 [45]	1-13/32 [36]	2-17/32 [64]	9 [58]	13 [6]
-7C		7 [178]		2-1/8 [54]	1-23/32 [44]	2-7/8 [73]	13 [84]	14 [6]
-8C	3 [76], 4 [102]	8 [203]	1-5/32 [29]		1-3/4 [44]		18 [116]	16 [7]
	6 [152]							18 [8]

PREFIXES	DESCRIPTION	STRAINER DESIG.	PIPE SIZE	LIST PRICE
ZN415*	D.C.C.I. Body Assembly with Polished Nickel Bronze Top	–5C	2", 3"	753.00
		–6C	2", 3", 4"	813.00
		–7C	2", 3", 4"	960.00
		–8C	3", 4"	1,054.00
			6"	1,601.00
ZB415	D.C.C.I. Body Assembly with Polished Bronze Top	–5C	2", 3"	719.00
		–6C	2", 3", 4"	753.00
		–7C	2", 3", 4"	923.00
		–8C	3", 4"	983.00
			6"	1,529.00
Z415	D.C.C.I. Body Assembly ONLY (add "-L/Top" to product sku)	No Strainer	2", 3", 4"	194.00
			6"	739.00

OUTLETS (SPECIFY PIPE SIZE IN INCHES AND TYPE OF OUTLET)

OUTLET TYPE		PIPE SIZE/ OUTLET TYPE	E BODY HT. DIM.	ADD
IC	Inside Caulk	2IC, 3IC, 4IC	4-13/16"	N/C
IP	Threaded	2IP	2-7/16"	80.00
		3IP	2-3/4"	80.00
		4IP	2-13/16"	80.00
		6IP	2-7/8"	80.00
NH	No-Hub	2NH, 3NH, 4NH	3-13/16"	N/C
NL	Neo-Loc	2NL, 3NL, 4NL	3-7/8"	N/C

SUFFIXES			ADD
–AR	Acid Resisting Epoxy Coated Cast Iron		171.00
–CP	Chrome-Plated Bronze Top		26.00
–G	Galvanized Cast Iron		198.00
–P	Trap Primer Connection (1/2"*)		N/C
◷ –PC	Protective Cover		64.00
◷ –SA	Stabilizer Assembly (See Z1035)		138.00
◷ –SQ	Stabilizer Q-Deck (See Z1035-Q)		184.00
◷ –SR	Stabilizer Ring (See Z400-SR)		121.00
◷ –TC	Neo-Loc Test Cap Gasket (2", 3", 4" NL Bottom Outlet Only)		24.00
–U	1"-3" High Extension Adapter (See Z400-U)	D.C.	140.00
		Galv.	362.00
	For each additional 1" above 3"		98.00
–V	Backwater Valve (Not Available with -Y)		380.00
–VP	Vandal-Proof Secured Top		58.00
–Y	Sediment Bucket (Not Available with -V)		109.00
–90	90° Threaded Side Outlet Body Assembly (2" and 3" Only)		219.00

BEST SELLERS	LIST PRICE
ZN415-2NH-5C	753.00
ZN415-2NL-6C-P-Y	922.00
ZN415-3NL-8C	1,054.00

**Regularly furnished unless otherwise specified.*

Items designated as Best Sellers are most specified and are generally in stock for shipment.

◷ This symbol denotes a product that is engineered to reduce installation and rework time.

For additional product information, please visit www.zurn.com

Z415 BODY ASSEMBLY WITH "TYPE D" STRAINER

ENGINEERING SPECIFICATION

Zurn ZN415D floor and shower drain features Dura-Coated cast iron body with bottom outlet, combination invertible membrane clamp and adjustable collar with seepage slots, and "TYPE D" polished, hinged solid, nickel bronze light-duty strainer.

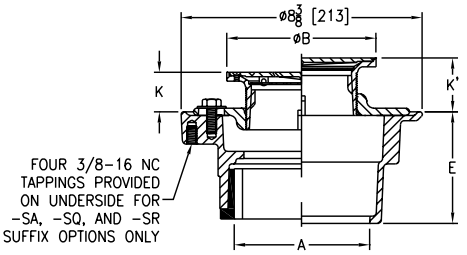

Strainer Designation	Dimensions in inches [mm]						Approximate Weight lb [kg]
	A Pipe Size	B Diameter	K		K'		
			Min.	Max.	Min.	Max.	
-5D	2 [51], 3 [76]	5 [127]	1 [25]	1-1/2 [38]	1-3/32 [27]	2-1/4 [57]	12 [5]
-6D	2 [51], 3 [76], 4 [102]	6 [152]		1-25/32 [45]	1-13/32 [36]	2-17/32 [64]	14 [6]
-7D		7 [178]		2-1/8 [54]	1-23/32 [44]	2-7/8 [73]	15 [7]
-8D	3 [76], 4 [102]	8 [203]	1-5/32 [29]		1-3/4 [44]		17 [8]
	6 [152]						19 [9]

PREFIXES	DESCRIPTION	STRAINER DESIG.	PIPE SIZE	LIST PRICE
ZN415*	D.C.C.I. Body Assembly with Polished Nickel Bronze Top	–5D	2", 3"	867.00
		–6D	2", 3", 4"	961.00
		–7D	2", 3", 4"	1,392.00
		–8D	3", 4"	1,406.00
			6"	1,953.00
ZB415	D.C.C.I. Body Assembly with Polished Bronze Top	–5D	2", 3"	814.00
		–6D	2", 3", 4"	851.00
		–7D	2", 3", 4"	1,242.00
		–8D	3", 4"	1,298.00
			6"	1,844.00
Z415	D.C.C.I. Body Assembly ONLY (add "-L/Top" to product sku)	No Strainer	2", 3", 4"	194.00
			6"	739.00

OUTLETS (SPECIFY PIPE SIZE IN INCHES AND TYPE OF OUTLET)				
OUTLET TYPE		PIPE SIZE/ OUTLET TYPE	E BODY HT. DIM.	ADD
IC	Inside Caulk	2IC, 3IC, 4IC	4-13/16"	N/C
IP	Threaded	2IP	2-7/16"	80.00
		3IP	2-3/4"	80.00
		4IP	2-13/16"	80.00
		6IP	2-7/8"	80.00
NH	No-Hub	2NH, 3NH, 4NH	3-13/16"	N/C
NL	Neo-Loc	2NL, 3NL, 4NL	3-7/8"	N/C

SUFFIXES			ADD
–AR	Acid Resisting Epoxy Coated Cast Iron		171.00
–G	Galvanized Cast Iron		198.00
–P	Trap Primer Connection (1/2"*)		N/C
◷ –PC	Protective Cover		64.00
◷ –SA	Stabilizer Assembly (See Z1035)		138.00
◷ –SQ	Stabilizer Q-deck (See Z1035-Q)		184.00
◷ –SR	Stabilizer Ring (See Z400-SR)		121.00
◷ –TC	Neo-Loc Test Cap Gasket (2", 3", 4" NL Bottom Outlet Only)		24.00
–U	1"-3" High Extension Adapter (See Z400-U)	D.C.	140.00
		Galv.	306.00
	For each additional 1" above 3"		98.00
–V	Backwater Valve (Not Available with -Y)		380.00
–VP	Vandal-Proof Secured Top		58.00
–Y	Sediment Bucket (Not Available with -V)		109.00
–90	90° Threaded Side Outlet Body Assembly (2" and 3" Only)		219.00

SEE LEGACY ADDENDUM ON PAGE 369 FOR MORE INFORMATION

For additional product information, please visit www.zurn.com

**Regularly furnished unless otherwise specified.*

Items designated as Best Sellers are most specified and are generally in stock for shipment.

◷ This symbol denotes a product that is engineered to reduce installation and rework time.

Z415 BODY ASSEMBLY WITH "TYPE E" STRAINER

ENGINEERING SPECIFICATION

Zurn ZN415E floor and shower drain features Dura-Coated cast iron body with bottom outlet, combination invertible membrane clamp and adjustable collar with seepage slots, and "TYPE E" polished, nickel bronze strainer with 4" diameter funnel.

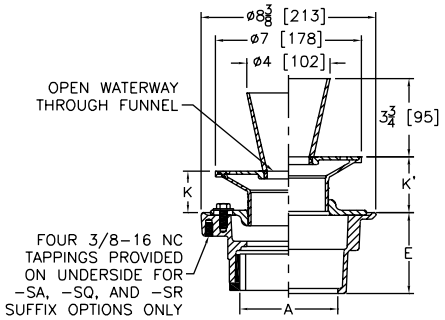

Strainer Designation	Dimensions in inches [mm]					Str. Open Area sq in [cm²]	Approximate Weight lb [kg]
	A Pipe Size	K		K'			
		Min.	Max.	Min.	Max.		
-7E	2 [51], 3 [76], 4 [102]	1 [25]	2-1/8 [54]	1-5/8 [41]	2-15/16 [75]	5 [32]	19 [9]

PREFIXES	DESCRIPTION	STRAINER DESIG.	PIPE SIZE	LIST PRICE
ZN415*	D.C.C.I. Body Assembly with Polished Nickel Bronze Top	–7E	2", 3", 4"	1,349.00
ZB415	D.C.C.I. Body Assembly with Polished Bronze Top	–7E	2", 3", 4"	1,242.00
Z415	D.C.C.I. Body Assembly ONLY (add "-L/Top" to product sku)	No Strainer	2", 3", 4"	194.00

OUTLETS (SPECIFY PIPE SIZE IN INCHES AND TYPE OF OUTLET)				
OUTLET TYPE		PIPE SIZE/ OUTLET TYPE	E BODY HT. DIM.	ADD
IC	Inside Caulk	2IC, 3IC, 4IC	4-13/16"	N/C
IP	Threaded	2IP	2-7/16"	80.00
		3IP	2-3/4"	80.00
		4IP	2-13/16"	80.00
NH	No-Hub	2NH, 3NH, 4NH	3-13/16"	N/C
NL	Neo-Loc	2NL, 3NL, 4NL	3-7/8"	N/C

SUFFIXES			ADD
–AR	Acid Resisting Epoxy Coated Cast Iron		171.00
–G	Galvanized Cast Iron		198.00
–P	Trap Primer Connection (1/2"*)		N/C
◷ –SA	Stabilizer Assembly (See Z1035)		138.00
–SC	Solid Cover		150.00
◷ –SQ	Stabilizer Q-Deck (See Z1035-Q)		184.00
◷ –SR	Stabilizer Ring (See Z400-SR)		121.00
◷ –TC	Neo-Loc Test Cap Gasket (2", 3", 4" NL Bottom Outlet Only)		24.00
◷ –U	1"-3" High Extension Adapter (See Z400-U)	D.C.	140.00
		Galv.	306.00
	For each additional 1" above 3"		98.00
–V	Backwater Valve (Not Available with -Y)		380.00
–VP	Vandal-Proof Secured Top		58.00
–Y	Sediment Bucket (Not Available with -V)		109.00
–90	90° Threaded Side Outlet Body Assembly (2" and 3" Only)		219.00

BEST SELLERS	LIST PRICE
ZN415-2NH-7E	1,349.00
ZN415-2NH-7E-P	1,349.00
ZN415-2NH-7E-P-U-VP	1,547.00
ZN415-2NL-7E	1,349.00
ZN415-3NH-7E	1,349.00
ZN415-4NL-7E-P	1,349.00

**Regularly furnished unless otherwise specified.*

Items designated as Best Sellers are most specified and are generally in stock for shipment.

◷ This symbol denotes a product that is engineered to reduce installation and rework time.

For additional product information, please visit www.zurn.com

Z415 BODY ASSEMBLY WITH "TYPE G" STRAINER

ENGINEERING SPECIFICATION

Zurn ZN415G floor and shower drain features Dura-Coated cast iron body with bottom outlet, combination invertible membrane clamp and adjustable collar with seepage slots, and "TYPE G" polished, nickel bronze strainer with dome grate.

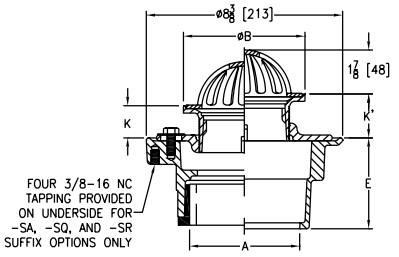

Strainer Designation	Dimensions in inches [mm]						Str. Open Area sq in [cm²]	Approximate Weight lb [kg]
	A Pipe Size	B Diameter	K		K'			
			Min.	Max.	Min.	Max.		
-5G	2 [51], 3 [76]	5 [127]	1 [25]	1-1/2 [38]	1-3/32 [27]	2-1/4 [57]	10 [65]	11 [5]
-6G	2 [51], 3 [76], 4 [102]	6 [152]		1-25/32 [45]	1-13/32 [36]	2-17/32 [64]	12 [77]	13 [6]

PREFIXES	DESCRIPTION	STRAINER DESIG.	PIPE SIZE	LIST PRICE
ZN415*	D.C.C.I. Body Assembly with Polished Nickel Bronze Top	–5G	2", 3"	680.00
		–6G	2", 3", 4"	813.00
ZB415	D.C.C.I. Body Assembly with Polished Bronze Top	–5G	2", 3"	645.00
		–6G	2", 3", 4"	734.00
Z415	D.C.C.I. Body Assembly ONLY (add "-L/Top" to product sku)	No Strainer	2", 3", 4"	194.00

OUTLETS (SPECIFY PIPE SIZE IN INCHES AND TYPE OF OUTLET)				
OUTLET TYPE		PIPE SIZE/ OUTLET TYPE	E BODY HT. DIM.	ADD
IC	Inside Caulk	2IC, 3IC, 4IC	4-13/16"	N/C
IP	Threaded	2IP	2-7/16"	80.00
		3IP	2-3/4"	80.00
		4IP	2-13/16"	80.00
NH	No-Hub	2NH, 3NH, 4NH	3-13/16"	N/C
NL	Neo-Loc	2NL, 3NL, 4NL	3-7/8"	N/C

SUFFIXES			ADD
–AR	Acid Resisting Epoxy Coated Cast Iron		171.00
–G	Galvanized Cast Iron		198.00
–P	Trap Primer Connection (1/2"*)		N/C
⏲ –SA	Stabilizer Assembly (See Z1035)		138.00
⏲ –SQ	Stabilizer Q-Deck (See Z1035-Q)		184.00
⏲ –SR	Stabilizer Ring (See Z400-SR)		121.00
–SS	Stainless Steel Mesh Screen Over Dome		527.00
⏲ –TC	Neo-Loc Test Cap Gasket (2", 3", 4" NL Bottom Outlet Only)		24.00
–U	1"-3" High Extension Adapter (See Z400-U)	D.C.	140.00
		Galv.	306.00
	For each additional 1" above 3"		98.00
–V	Backwater Valve (Not Available with -Y)		380.00
–VP	Vandal-Proof Secured Top		58.00
–Y	Sediment Bucket (Not Available with -V)		109.00
–90	90° Threaded Side Outlet Body Assembly (2" and 3" Only)		219.00

BEST SELLER	LIST PRICE
ZN415-3IP-5G-90	979.00

For additional product information, please visit www.zurn.com

**Regularly furnished unless otherwise specified.*

Items designated as Best Sellers are most specified and are generally in stock for shipment.

⏲ *This symbol denotes a product that is engineered to reduce installation and rework time.*

Z415 BODY ASSEMBLY WITH "TYPE H" STRAINER

ENGINEERING SPECIFICATION

Zurn ZN415H floor and shower drain features Dura-Coated cast iron body with bottom outlet, combination invertible membrane clamp and adjustable collar with seepage slots, and "TYPE H" polished, nickel bronze light-duty strainer with flashing clamp device for clamping at the finished floor level.

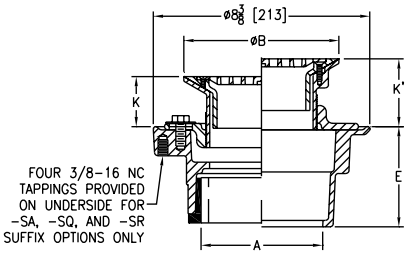

Strainer Designation	Dimensions in inches [mm]						Str. Open Area sq in [cm²]	Approximate Weight lb [kg]
	A Pipe Size	B Diameter	K		K'			
			Min.	Max.	Min.	Max.		
-6H	2 [51], 3 [76], 4 [102]	6 [152]	1-1/4 [32]	2-3/8 [60]	2-3/16 [56]	3-5/16 [84]	7 [45]	13 [6]
-9H		9 [229]	1-11/16 [43]	2-5/8 [67]	2-7/16 [62]	3-9/16 [90]	18 [116]	20 [9]

PREFIXES	DESCRIPTION	STRAINER DESIG.	PIPE SIZE	LIST PRICE
ZN415*	D.C.C.I. Body Assembly with Polished Nickel Bronze Top	-6H	2", 3", 4"	1,582.00
		-9H	2", 3", 4"	2,022.00
ZB415	D.C.C.I. Body Assembly with Polished Bronze Top	-6H	2", 3", 4"	1,425.00
		-9H	2", 3", 4"	1,811.00
Z415	D.C.C.I. Body Assembly ONLY (add "-L/Top" to product sku)	No Strainer	2", 3", 4"	194.00

OUTLETS (SPECIFY PIPE SIZE IN INCHES AND TYPE OF OUTLET)				
OUTLET TYPE		PIPE SIZE/ OUTLET TYPE	E BODY HT. DIM.	ADD
IP	Threaded	2IP	2-7/16"	80.00
		3IP	2-3/4"	80.00
		4IP	2-13/16"	80.00
NH	No-Hub	2NH, 3NH, 4NH	3-13/16"	N/C
NL	Neo-Loc	2NL, 3NL, 4NL	3-7/8"	N/C

SUFFIXES			ADD
–AR	Acid Resisting Epoxy Coated Cast Iron		171.00
–G	Galvanized Cast Iron		198.00
–P	Trap Primer Connection (1/2"*)		N/C
⏲ –SA	Stabilizer Assembly (See Z1035)		138.00
⏲ –SQ	Stabilizer Q-Deck (See Z1035-Q)		184.00
⏲ –SR	Stabilizer Ring (See Z400-SR)		121.00
⏲ –TC	Neo-Loc Test Cap Gasket (2", 3", 4" NL Bottom Outlet Only)		24.00
–U	1"-3" High Extension Adapter (See Z400-U)	D.C.	140.00
		Galv.	306.00
	For each additional 1" above 3"		98.00
–V	Backwater Valve (Not Available with -Y)		380.00
–VP	Vandal-Proof Secured Top		58.00
–Y	Sediment Bucket (Not Available with -V)		109.00

BEST SELLERS	LIST PRICE
ZN415-2NH-6H	1,582.00
ZN415-2NH-6H-P	1,582.00
ZN415-2NL-6H	1,582.00
ZN415-4NH-6H	1,582.00
ZN415-4NH-6H-SA	1,707.00

**Regularly furnished unless otherwise specified.*

Items designated as Best Sellers are most specified and are generally in stock for shipment.

⏲ *This symbol denotes a product that is engineered to reduce installation and rework time.*

For additional product information, please visit www.zurn.com

Z415 BODY ASSEMBLY WITH "TYPE I" STRAINER

ENGINEERING SPECIFICATION

Zurn ZN415I floor and shower drain features Dura-Coated cast iron body with bottom outlet, combination invertible membrane clamp and adjustable collar with seepage slots, and "TYPE I" polished, nickel bronze strainer with raised flange.

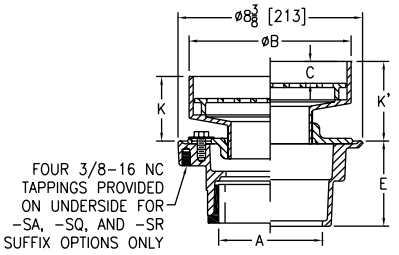

Strainer Designation	Dimensions in inches [mm]							Str. Open Area sq in [cm²]	Approximate Weight lb [kg]
	A Pipe Size	B Diameter	C	K		K'			
				Min.	Max.	Min.	Max.		
-5I	2 [51], 3 [76]	5-7/16 [138]	7/8 [22]	1-9/16 [40]	2-5/8 [67]	2-1/8 [54]	3-3/8 [86]	8 [52]	14 [6]
-7I	2 [51], 3 [76], 4 [102]	7-3/8 [187]	1 [25]	2-9/16 [65]	3-3/8 [86]	2-7/8 [73]	4-1/8 [104]	13 [84]	19 [9]
-9I	3 [76], 4 [102]	9 [229]	1/2 [13]	2-3/16 [56]	3-1/8 [79]	2-5/8 [67]	3-7/8 [98]	23 [148]	23 [10]
	6 [152]								

PREFIXES	DESCRIPTION	STRAINER DESIG.	PIPE SIZE	LIST PRICE
ZN415*	D.C.C.I. Body Assembly with Polished Nickel Bronze Top	-5I	2", 3"	1,036.00
		-7I	2", 3", 4"	1,116.00
		-9I	3", 4"	1,564.00
			6"	2,108.00
ZB415	D.C.C.I. Body Assembly with Polished Bronze Top	-5I	2", 3"	973.00
		-7I	2", 3", 4"	1,023.00
		-9I	3", 4"	1,430.00
			6"	1,976.00
Z415	D.C.C.I. Body Assembly ONLY (add "-L/Top" to product sku)	No Strainer	2", 3"	194.00
			2", 3", 4"	194.00
			3", 4"	194.00
			6"	739.00

OUTLETS (SPECIFY PIPE SIZE IN INCHES AND TYPE OF OUTLET)				
OUTLET TYPE		PIPE SIZE/ OUTLET TYPE	E BODY HT. DIM.	ADD
IC	Inside Caulk	2IC, 3IC, 4IC	4-13/16"	N/C
IP	Threaded	2IP	2-7/16"	80.00
		3IP	2-3/4"	80.00
		4IP	2-13/16"	80.00
		6IP	2-7/8"	80.00
NH	No-Hub	2NH, 3NH, 4NH	3-13/16"	N/C
NL	Neo-Loc	2NL, 3NL, 4NL	3-7/8"	N/C

SUFFIXES			ADD
–AR	Acid Resisting Epoxy Coated Cast Iron		171.00
–G	Galvanized Cast Iron		198.00
–P	Trap Primer Connection (1/2"*)		N/C
◷ –SA	Stabilizer Assembly (See Z1035)		138.00
◷ –SQ	Stabilizer Q-deck (See Z1035-Q)		184.00
◷ –SR	Stabilizer Ring (See Z400-SR)		121.00
◷ –TC	Neo-Loc Test Cap Gasket (2", 3", 4" NL Bottom Outlet Only)		24.00
–TS	Top Secured with Slotted Screws		58.00
–TSP	Trap Seal Protection Device (Size Matches Drain Outlet Selected, See Z1072)		POA
–U	1"-3" High Extension Adapter (See Z400-U)	D.C.	140.00
		Galv.	306.00
	For each additional 1" above 3"		98.00
–V	Backwater Valve (Not Available with -Y)		380.00
–VP	Vandal-Proof Secured Top		117.00
–Y	Sediment Bucket (Not Available with -V)		109.00
–90	90° Threaded Side Outlet Body Assembly (2" and 3" Only)		219.00

BEST SELLERS	LIST PRICE
ZN415-2NH-5I	1,036.00
ZN415-2NH-7I	1,116.00
ZN415-2NL-7I	1,116.00
ZN415-3NH-7I	1,116.00
ZN415-3NL-7I-P	1,116.00

For additional product information, please visit www.zurn.com

**Regularly furnished unless otherwise specified.*

Items designated as Best Sellers are most specified and are generally in stock for shipment.

◷ This symbol denotes a product that is engineered to reduce installation and rework time.

Z415 BODY ASSEMBLY WITH "TYPE J" HEEL-PROOF STRAINER

ENGINEERING SPECIFICATION

Zurn ZN415J floor and shower drain features Dura-Coated cast iron body with bottom outlet, combination invertible membrane clamp and adjustable collar with seepage slots, and "TYPE J" polished, nickel bronze rectangular light-duty, heel-proof strainer.

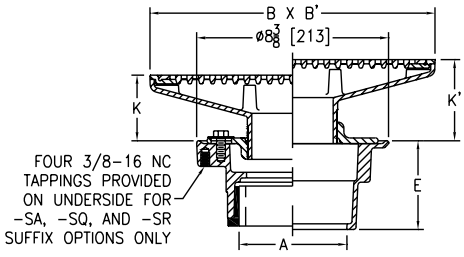

Strainer Designation	Dimensions in inches [mm]						Str. Open Area sq in [cm²]	Approximate Weight lb [kg]
	A Pipe Size	B Diameter	K		K'			
			Min.	Max.	Min.	Max.		
-8J	2 [51], 3 [76], 4 [102]	4-1/2 [114] x 8 [203]	1-3/8 [35]	2-5/8 [67]	2-1/8 [54]	3-3/8 [86]	12 [77]	13 [6]
-9J		5 [127] x 9 [229]	1-5/8 [41]	2-13/16 [71]	2-3/8 [60]	3-5/8 [92]	15 [97]	14 [6]
-13J	3 [76], 4 [102]	5-1/2 [140] x 13 [330]	2-3/32 [53]	3-5/16 [84]	2-13/16 [71]	4 [102]	20 [129]	18 [8]
-17J		5 [127] x 17 [432]	2-1/4 [57]				29 [187]	23 [10]
-21J		5 [127] x 21 [533]	2-5/16 [59]				32 [206]	27 [12]
-20J	6 [152]	10 [254] x 20 [508]	2-9/16 [65]	3-1/4 [83]	2-7/8 [73]		66 [426]	45 [20]

PREFIXES	DESCRIPTION	STRAINER DESIG.	PIPE SIZE	LIST PRICE
ZN415*	D.C.C.I. Body Assembly with Polished Nickel Bronze Top	-8J	2", 3", 4"	1,054.00
		-9J	2", 3", 4"	1,054.00
		-13J	3", 4"	1,430.00
		-17J	3", 4"	1,524.00
		-21J	3", 4"	2,196.00
		-20J	6"	4,780.00
ZB415	D.C.C.I. Body Assembly with Polished Bronze Top	-8J	2", 3", 4"	984.00
		-9J	2", 3", 4"	984.00
		-13J	3", 4"	1,298.00
		-17J	3", 4"	1,392.00
		-21J	3", 4"	1,934.00
		-20J	6"	3,998.00
Z415	D.C.C.I. Body Assembly ONLY (add "-L/Top" to product sku)	No Strainer	2", 3", 4"	194.00
			6"	739.00

OUTLETS (SPECIFY PIPE SIZE IN INCHES AND TYPE OF OUTLET)

OUTLET TYPE		PIPE SIZE/ OUTLET TYPE	E BODY HT. DIM.	ADD
IC	Inside Caulk	2IC, 3IC, 4IC	4-13/16"	N/C
IP	Threaded	2IP	2-7/16"	80.00
		3IP	2-3/4"	80.00
		4IP	2-13/16"	80.00
		6IP	2-7/8"	80.00
NH	No-Hub	2NH, 3NH, 4NH	3-13/16"	N/C
NL	Neo-Loc	2NL, 3NL, 4NL	3-7/8"	N/C

SUFFIXES			ADD
–AR	Acid Resisting Epoxy Coated Cast Iron		653.00
–G	Galvanized Cast Iron		198.00
–P	Trap Primer Connection (1/2"*)		N/C
⏲ –SA	Stabilizer Assembly (See Z1035)		138.00
⏲ –SQ	Stabilizer Q-deck (See Z1035-Q)		184.00
⏲ –SR	Stabilizer Ring (See Z400-SR)		121.00
⏲ –TC	Neo-Loc Test Cap Gasket (2", 3", 4" NL Bottom Outlet Only)		24.00
–U	1"-3" High Extension Adapter (See Z400-U)	D.C.	140.00
		Galv.	306.00
	For each additional 1" above 3"		98.00
–V	Backwater Valve (Not Available with -Y)		380.00
–VP	Vandal-Proof Secured Top		58.00
–Y	Sediment Bucket (Not Available with -V)		109.00
–90	90° Threaded Side Outlet Body Assembly (2" and 3" Only)		219.00

BEST SELLERS	LIST PRICE
ZN415-2NH-8J	1,054.00
ZN415-3NL-9J-P	1,054.00

**Regularly furnished unless otherwise specified.*

Items designated as Best Sellers are most specified and are generally in stock for shipment.

⏲ *This symbol denotes a product that is engineered to reduce installation and rework time.*

For additional product information, please visit www.zurn.com

Z415 BODY ASSEMBLY WITH "TYPE K" STRAINER

ENGINEERING SPECIFICATION

Zurn ZN415K floor and shower drain features Dura-Coated cast iron body with bottom outlet, combination invertible membrane clamp and adjustable collar with seepage slots, and TYPE K polished, nickel bronze, angular, light-duty strainer.

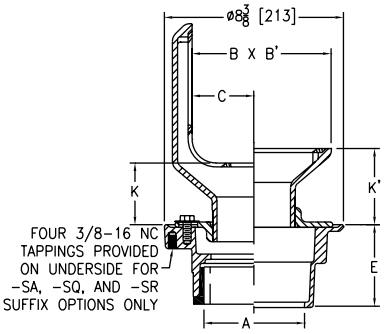

Strainer Designation	Dimensions in inches [mm]							Str. Open Area sq in [cm²]	Approximate Weight lb [kg]
	A Pipe Size	B x B'	C	K		K'			
				Min.	Max.	Min.	Max.		
-5K	2 [51], 3 [76], 4 [102]	3-3/4 [95] x 5 [127]	1-7/32 [31]	1 [25]	2 [51]	1-3/4 [44]	2-3/4 [70]	11 [71]	18 [8]
-7K		6-5/8 [143] x 7 [178]	2-15/16 [75]	2-3/16 [56]	3-3/8 [86]	2-7/8 [73]	4-1/8 [105]	29 [187]	25 [11]

PREFIXES	DESCRIPTION	STRAINER DESIG.	PIPE SIZE	LIST PRICE
ZN415*	D.C.C.I. Body Assembly with Polished Nickel Bronze Top	-5K	2", 3", 4"	1,953.00
		-7K	2", 3", 4"	2,441.00
ZB415	D.C.C.I. Body Assembly with Polished Bronze Top	-5K	2", 3", 4"	1,803.00
		-7K	2", 3", 4"	2,252.00
Z415	D.C.C.I. Body Assembly ONLY (add "-L/Top" to product sku)	No Strainer	2", 3", 4"	194.00

OUTLETS (SPECIFY PIPE SIZE IN INCHES AND TYPE OF OUTLET)				
OUTLET TYPE		PIPE SIZE/ OUTLET TYPE	E BODY HT. DIM.	ADD
IP	Threaded	2IP	2-7/16"	80.00
		3IP	2-3/4"	80.00
		4IP	2-13/16"	80.00
NH	No-Hub	2NH, 3NH, 4NH	3-13/16"	N/C
NL	Neo-Loc	2NL, 3NL, 4NL	3-7/8"	N/C

SUFFIXES			ADD
–AR	Acid Resisting Epoxy Coated Cast Iron		171.00
–G	Galvanized Cast Iron		198.00
–P	Trap Primer Connection (1/2"*)		N/C
◷ –SA	Stabilizer Assembly (See Z1035)		138.00
◷ –SQ	Stabilizer Q-Deck (See Z1035-Q)		184.00
◷ –SR	Stabilizer Ring (See Z400-SR)		121.00
◷ –TC	Neo-Loc Test Cap Gasket (2", 3", 4" NL Bottom Outlet Only)		24.00
–U	1"-3" High Extension Adapter (See Z400-U)	D.C.	140.00
		Galv.	306.00
	For each additional 1" above 3"		98.00
–V	Backwater Valve (Not Available with -Y)		380.00
–VP	Vandal-Proof Secured Top		58.00
–Y	Sediment Bucket (Not Available with -V)		109.00
–90	90° Threaded Side Outlet Body Assembly (2" and 3" Only)		219.00

BEST SELLER	LIST PRICE
ZN415-3NL-5K-P-VP	2,011.00

For additional product information, please visit www.zurn.com

**Regularly furnished unless otherwise specified.*

Items designated as Best Sellers are most specified and are generally in stock for shipment.

◷ This symbol denotes a product that is engineered to reduce installation and rework time.

Z415 BODY ASSEMBLY WITH "TYPE M" STRAINER AND SUR-SET BUCKET

ENGINEERING SPECIFICATION

Zurn ZN415M floor and shower drain features Dura-Coated cast iron body with bottom outlet, combination invertible membrane clamp and adjustable collar with seepage slots, and "TYPE M" polished nickel bronze strainer and Sur-Set bucket.

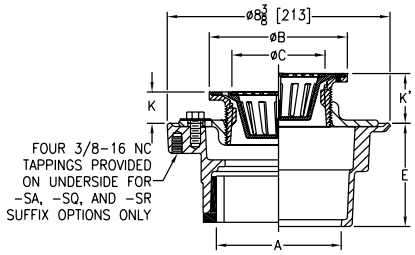

Strainer Designation	Dimensions in inches [mm]							Str. Open Area sq in [cm²]	Approximate Weight lb [kg]
	A Pipe Size	B Diameter	C	K		K'			
				Min.	Max.	Min.	Max.		
-5M	2 [51], 3 [76], 4 [102]	5 [127]	3-1/2 [89]	7/8 [22]	1-5/8 [41]	1-3/16 [30]	2-3/8 [60]	4-1/2 [29]	11 [5]

PREFIXES	DESCRIPTION	STRAINER DESIG.	PIPE SIZE	LIST PRICE
ZN415*	D.C.C.I. Body Assembly with Polished Nickel Bronze Top	-5M	2", 3", 4"	967.00
ZB415	D.C.C.I. Body Assembly with Polished Bronze Top	-5M	2", 3", 4"	917.00
Z415	D.C.C.I. Body Assembly ONLY (add "-L/Top" to product sku)	No Strainer	2", 3", 4"	194.00

OUTLETS (SPECIFY PIPE SIZE IN INCHES AND TYPE OF OUTLET)				
OUTLET TYPE		PIPE SIZE/ OUTLET TYPE	E BODY HT. DIM.	ADD
IP	Threaded	2IP	2-7/16"	80.00
		3IP	2-3/4"	80.00
		4IP	2-13/16"	80.00
NH	No-Hub	2NH, 3NH, 4NH	3-13/16"	N/C
NL	Neo-Loc	2NL, 3NL, 4NL	3-7/8"	N/C

SUFFIXES			ADD
-G	Galvanized Cast Iron		198.00
-P	Trap Primer Connection (1/2"*)		N/C
◷ -PC	Protective Cover		64.00
◷ -SA	Stabilizer Assembly (See Z1035)		138.00
◷ -SQ	Stabilizer Q-Deck (See Z1035-Q)		184.00
◷ -SR	Stabilizer Ring (See Z400-SR)		121.00
◷ -TC	Neo-Loc Test Cap Gasket (2", 3", 4" NL Bottom Outlet Only)		24.00
-U	1"-3" High Extension Adapter (See Z400-U)	D.C.	140.00
		Galv.	306.00
	For each additional 1" above 3"		98.00
-VP	Vandal-Proof Secured Top		117.00

*Regularly furnished unless otherwise specified.

Items designated as Best Sellers are most specified and are generally in stock for shipment.

◷ This symbol denotes a product that is engineered to reduce installation and rework time.

Z415 BODY ASSEMBLY WITH "TYPE N" STRAINER

ENGINEERING SPECIFICATION

Zurn Z415N floor and shower drain features Dura-Coated cast iron body with bottom outlet, combination invertible membrane clamp and adjustable collar with seepage slots, and "TYPE N" D.C.C.I. light-duty strainer with deep flanged grate.

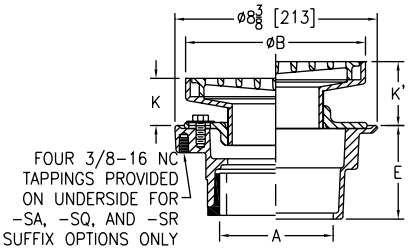

Strainer Designation	Dimensions in inches [mm]						Str. Open Area sq in [cm²]	Approximate Weight lb [kg]
	A Pipe Size	B Diameter	K		K'			
			Min.	Max.	Min.	Max.		
-7N	2 [51], 3 [76], 4 [102]	7 [178]	1-9/16 [40]	2-3/8 [60]	1-7/8 [48]	3-1/8 [79]	12 [77]	17 [8]
-9N	2 [51], 3 [76], 4 [102]	9 [229]	1-11/16 [43]	2-5/8 [67]	2-3/16 [56]	3-3/8 [86]	23 [148]	21 [10]
	6 [152]							23 [10]

PREFIXES	DESCRIPTION	STRAINER DESIG.	PIPE SIZE	LIST PRICE
Z415*	D.C.C.I. Body Assembly with Dura-Coated Top	-7N	2", 3", 4"	539.00
		-9N	2", 3", 4"	664.00
			6"	1,208.00
ZB415	D.C.C.I. Body Assembly with Polished Bronze Top	-7N	2", 3", 4"	1,023.00
		-9N	2", 3", 4"	1,430.00
			6"	1,976.00
ZN415	D.C.C.I. Body Assembly with Polished Nickel Bronze Top	-7N	2", 3", 4"	1,116.00
		-9N	2", 3", 4"	1,547.00
			6"	2,092.00
Z415	D.C.C.I. Body Assembly ONLY (add "-L/Top" to product sku)	No Strainer	2", 3", 4"	194.00
			2", 3", 4"	194.00
			6"	739.00

OUTLETS (SPECIFY PIPE SIZE IN INCHES AND TYPE OF OUTLET)

OUTLET TYPE		PIPE SIZE/ OUTLET TYPE	E BODY HT. DIM.	ADD
IP	Threaded	2IP	2-7/16"	80.00
		3IP	2-3/4"	80.00
		4IP	2-13/16"	80.00
		6IP	2-7/8"	80.00
NH	No-Hub	2NH, 3NH, 4NH	3-13/16"	N/C
NL	Neo-Loc	2NL, 3NL, 4NL	3-7/8"	N/C

SUFFIXES			ADD
–AR	Acid Resisting Epoxy Coated Cast Iron		171.00
–DG	Duresist Grate	7"	129.00
		9"	165.00
–G	Galvanized Cast Iron		198.00
–P	Trap Primer Connection (1/2"*)		N/C
⏲ –SA	Stabilizer Assembly (See Z1035)		138.00
⏲ –SQ	Stabilizer Q-Deck (See Z1035-Q)		184.00
⏲ –SR	Stabilizer Ring (See Z400-SR)		121.00
⏲ –TC	Neo-Loc Test Cap Gasket (2", 3", 4" NL Bottom Outlet Only)		24.00
–TS	Top Secured with Slotted Screws		58.00
–U	1"-3" High Extension Adapter (See Z400-U)	D.C.	140.00
		Galv.	306.00
	For each additional 1" above 3"		98.00
–V	Backwater Valve (Not Available with -Y)		380.00
–VP	Vandal-Proof Secured Top		117.00
–Y	Sediment Bucket (Not Available with -V)		109.00
–90	90° Threaded Side Outlet Body Assembly (2" and 3" Only)		219.00

BEST SELLERS	LIST PRICE
Z415-3NH-7N-P	539.00
Z415-4NH-7N	539.00
ZN415-2NH-7N-P	1,116.00
ZN415-3NL-7N-P	1,116.00
ZN415-3NL-9N-P	1,547.00

For additional product information, please visit www.zurn.com

**Regularly furnished unless otherwise specified.*

Items designated as Best Sellers are most specified and are generally in stock for shipment.

⏲ *This symbol denotes a product that is engineered to reduce installation and rework time.*

Z415 BODY ASSEMBLY WITH "TYPE S" STRAINER

ENGINEERING SPECIFICATION

Zurn ZN415S floor and shower drain features Dura-Coated cast iron body with bottom outlet, combination invertible membrane clamp and adjustable collar with seepage slots, and "TYPE S" polished, nickel bronze, square heel-proof, light-duty strainer.

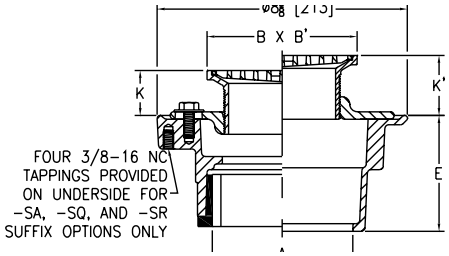

Strainer Designation	Dimensions in inches [mm]						Str. Open Area sq in [cm²]	Approximate Weight lb [kg]
	A Pipe Size	B x B' Strainer Top Size	K		K'			
			Min.	Max.	Min.	Max.		
-5S	2 [51], 3 [76]	5 x 5 [127]	1 [25]	1-19/32 [40]	1-1/4 [32]	2-3/8 [60]	19 [122]	12 [5]
-6S	2 [51], 3 [76], 4 [102]	6 x 6 [152]		1-27/32 [47]	1-13/32 [36]	2-19/32 [66]	13 [84]	13 [6]
-7S		7 x 7 [178]		1-7/8 [48]	1-3/8 [35]	2-5/8 [67]	21 [135]	14 [6]
-8S	3 [76], 4 [102]	8 x 8 [203]	1-3/32 [27]		1-3/4 [44]		28 [181]	15 [7]
-10S	6 [152]	10 x 10 [254]						21 [10]

PREFIXES	DESCRIPTION	STRAINER DESIG.	PIPE SIZE	LIST PRICE
ZN415*	D.C.C.I. Body Assembly with Polished Nickel Bronze Top	-5S	2", 3"	645.00
		-6S	2", 3", 4"	719.00
		-7S	2", 3", 4"	863.00
		-8S	3", 4"	1,042.00
		-10S	6"	2,198.00
ZB415	D.C.C.I. Body Assembly with Polished Bronze Top	-5S	2", 3"	592.00
		-6S	2", 3", 4"	680.00
		-7S	2", 3", 4"	807.00
		-8S	3", 4"	946.00
		-10S	6"	2,088.00
Z415	D.C.C.I. Body Assembly ONLY (add "-L/Top" to product sku)	No Strainer	2", 3", 4"	194.00
			6"	739.00

OUTLETS (SPECIFY PIPE SIZE IN INCHES AND TYPE OF OUTLET)

OUTLET TYPE		PIPE SIZE/ OUTLET TYPE	E BODY HT. DIM.	ADD
IC	Inside Caulk	2IC, 3IC, 4IC	4-13/16"	N/C
IG	Inside Gasket	2IG, 3IG, 4IG	4-13/16"	N/C
IP	Threaded	2IP	2-7/16"	80.00
		3IP	2-3/4"	80.00
		4IP	2-13/16"	80.00
		6IP	2-7/8"	80.00
NH	No-Hub	2NH, 3NH, 4NH	3-13/16"	N/C
NL	Neo-Loc	2NL, 3NL, 4NL	3-7/8"	N/C

SUFFIXES			ADD
–AR	Acid Resisting Epoxy Coated Cast Iron		171.00
–CP	Chrome-Plated Bronze Top		26.00
–G	Galvanized Cast Iron		198.00
–HD	Heavy-Duty Grate (ZN 6" x 6" only)		206.00
–OF	Oval Funnel (6", 7", 8", 10" strainers only) (See Z329-7)		–
–P	Trap Primer Connection (1/2"*)		N/C
◷ –PC	Protective Cover		64.00
◷ –SA	Stabilizer Assembly (See Z1035)		138.00
◷ –SQ	Stabilizer Q-Deck (See Z1035-Q)		184.00
◷ –TC	Neo-Loc Test Cap Gasket (2", 3", 4" NL Bottom Outlet Only)		24.00
–U	1"-3" High Extension Adapter (See Z400-U)	D.C.	140.00
		Galv.	306.00
	For each additional 1" above 3"		98.00
–V	Backwater Valve (Not Available with -Y)		380.00
–VP	Vandal-Proof Secured Top		58.00
–Y	Sediment Bucket (Not Available with -V)		109.00
–4	4" Diameter Funnel (See Z328)		–
–90	90° Threaded Side Outlet Body Assembly (2" and 3" Only)		219.00

BEST SELLERS	LIST PRICE
ZB415-2NH-5S-CP	618.00
ZN415-2NH-5S-P	645.00
ZB415-2NL-5S	592.00
ZB415-3NH-6S	680.00
ZB415-3NH-6S-P	680.00
ZB415-3NL-5S	592.00
ZN415-3NL-5S-P	645.00
ZB415-3NL-6S-P	680.00
ZN415-2NL-7S	863.00
ZB415-3NL-8S	946.00
ZN415-3NH-8S	1,042.00

**Regularly furnished unless otherwise specified.*

Items designated as Best Sellers are most specified and are generally in stock for shipment.

◷ This symbol denotes a product that is engineered to reduce installation and rework time.

For additional product information, please visit www.zurn.com

ZS415 BODY ASSEMBLY WITH "TYPE SS" STRAINER

ENGINEERING SPECIFICATION

Zurn ZS415SS floor and shower drain features Dura-Coated cast iron body with bottom outlet, combination invertible membrane clamp and adjustable collar with seepage slots, and "TYPE SS" heel-proof, stainless steel, medium-duty square strainer.

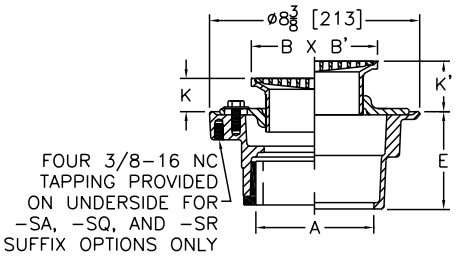

Strainer Designation	Dimensions in inches [mm]						Str. Open Area sq in [cm²]	Approximate Weight lb [kg]
	A Pipe Size	B x B' Strainer Top Size	K		K'			
			Min.	Max.	Min.	Max.		
-5SS	2 [51], 3 [76]	5 x 5 [127]	1 [25]	1-19/32 [40]	1-1/4 [32]	2-3/8 [60]	8-1/2 [55]	11 [5]
-6SS	2 [51], 3 [76], 4 [102]	6 x 6 [152]		1-27/32 [47]	1-13/32 [36]	2-19/32 [66]	13 [84]	12 [5]
-8SS	3 [76], 4 [102]	8 x 8 [203]	1-3/32 [27]	1-7/8 [48]	1-3/4 [44]	2-5/8 [67]	24-1/2 [158]	15 [7]

PREFIXES	DESCRIPTION	STRAINER DESIG.	PIPE SIZE	LIST PRICE
ZS415*	D.C.C.I. Body Assembly with Square Type 304 (CF8) Stainless Steel Top	-5SS	2", 3"	1,091.00
		-6SS	2", 3", 4"	1,337.00
		-8SS	3", 4"	1,812.00
ZM415	D.C.C.I. Body Assembly with Square Type 316 (CF8M) Stainless Steel Top	-5SS	2", 3"	POA
		-6SS	2", 3", 4"	POA
		-8SS	3", 4"	POA
Z415	D.C.C.I. Body Assembly ONLY (add "-L/Top" to product sku)	No Strainer	2", 3", 4"	194.00

OUTLETS (SPECIFY PIPE SIZE IN INCHES AND TYPE OF OUTLET)				
OUTLET TYPE		PIPE SIZE/ OUTLET TYPE	E BODY HT. DIM.	ADD
IC	Inside Caulk	2IC, 3IC, 4IC	4-13/16"	N/C
IP	Threaded	2IP	2-7/16"	80.00
		3IP	2-3/4"	80.00
		4IP	2-13/16"	80.00
NH	No-Hub	2NH, 3NH, 4NH	3-13/16"	N/C
NL	Neo-Loc	2NL, 3NL, 4NL	3-7/8"	N/C

SUFFIXES			ADD
–AR	Acid Resisting Epoxy Coated Cast Iron		171.00
–G	Galvanized Cast Iron		198.00
–P	Trap Primer Connection (1/2"*)		N/C
◷ –TC	Neo-Loc Test Cap Gasket (2", 3", 4" NL Bottom Outlet Only)		24.00
–U	1"-3" High Extension Adapter (See Z400-U)	D.C.	140.00
		Galv.	306.00
	For each additional 1" above 3"		98.00
–V	Backwater Valve (Not Available with -Y)		380.00
–VP	Vandal-Proof Secured Top		58.00
–Y	Sediment Bucket (Not Available with -V)		109.00

For additional product information, please visit www.zurn.com

**Regularly furnished unless otherwise specified.*

Items designated as Best Sellers are most specified and are generally in stock for shipment.

◷ This symbol denotes a product that is engineered to reduce installation and rework time.

Z415 BODY ASSEMBLY WITH "TYPE SC" STRAINER

ENGINEERING SPECIFICATION

Zurn ZN415SC floor and shower drain features Dura-Coated cast iron body with bottom outlet, combination invertible membrane clamp, adjustable collar with seepage slots, and "TYPE SC" polished, nickel bronze strainer with flashing clamp device and adjustable strainer top with scoriated, hinged, light-duty cover.

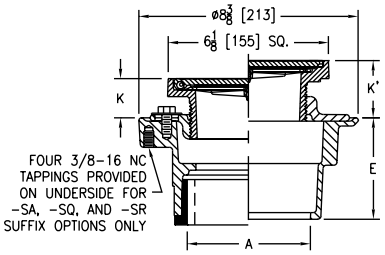

Strainer Designation	Dimensions in inches [mm]					Approximate Weight lb [kg]
	A Pipe Size	K		K'		
		Min.	Max.	Min.	Max.	
-6SC	2 [51], 3 [76], 4 [102]	1-3/16 [30]	1-15/16 [152]	1-3/4 [44]	2-7/8 [73]	16 [7]

PREFIXES	DESCRIPTION	STRAINER DESIG.	PIPE SIZE	LIST PRICE
ZN415*	D.C.C.I. Body Assembly with Polished Nickel Bronze Top	-6SC	2", 3", 4"	1,239.00
ZB415	D.C.C.I. Body Assembly with Polished Bronze Top	-6SC	2", 3", 4"	1,085.00
Z415	D.C.C.I. Body Assembly ONLY (add "-L/Top" to product sku)	No Strainer	2", 3", 4"	194.00

OUTLETS (SPECIFY PIPE SIZE IN INCHES AND TYPE OF OUTLET)				
OUTLET TYPE		PIPE SIZE/ OUTLET TYPE	E BODY HT. DIM.	ADD
NH	No-Hub	2NH, 3NH, 4NH	3-13/16"	N/C
NL	Neo-Loc	2NL, 3NL, 4NL	3-7/8"	N/C

SUFFIXES			ADD
–AR	Acid Resisting Epoxy Coated Cast Iron		171.00
-CP	Chome-Plated Bronze Top		26.00
–G	Galvanized Cast Iron		198.00
–GC	Gasketed Cover		84.00
–LR	Lift Ring		224.00
–P	Trap Primer Connection (1/2"*)		N/C
◷ –SA	Stabilizer Assembly (See Z1035)		138.00
◷ –SQ	Stabilizer Q-deck (See Z1035-Q)		184.00
◷ –SR	Stabilizer Ring (See Z400-SR)		121.00
◷ –TC	Neo-Loc Test Cap Gasket (2", 3", 4" NL Bottom Outlet Only)		24.00
–TS	Top Secured with Slotted Screw		58.00
–U	1"-3" High Extension Adapter (See Z400-U)	D.C.	140.00
		Galv.	306.00
	For each additional 1" above 3"		98.00
–V	Backwater Valve (Not Available with -Y)		380.00
–VP	Vandal-Proof Secured Top		98.00
–Y	Sediment Bucket (Not Available with -V)		109.00

**Regularly furnished unless otherwise specified.*

Items designated as Best Sellers are most specified and are generally in stock for shipment.

◷ This symbol denotes a product that is engineered to reduce installation and rework time.

For additional product information, please visit www.zurn.com

Z415 BODY ASSEMBLY WITH "TYPE SH" STRAINER

ENGINEERING SPECIFICATION

Zurn ZN415SH floor and shower drain features Dura-Coated cast iron body with bottom outlet, combination invertible membrane clamp and adjustable collar with seepage slots, and "TYPE SH" polished, nickel bronze, square, hinged, light-duty strainer.

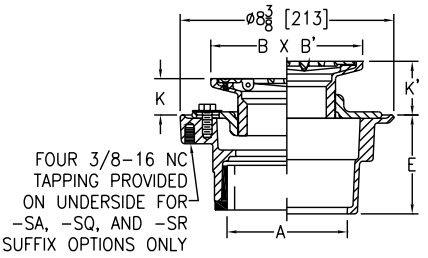

Strainer Designation	Dimensions in inches [mm]						Str. Open Area sq in [cm²]	Approximate Weight lb [kg]
	A Pipe Size	B x B' Strainer Top Size	K		K'			
			Min.	Max.	Min.	Max.		
-6SH	2 [51], 3 [76], 4 [102]	6 x 6 [152]	1 [25]	1-7/8 [48]	1-3/4 [44]	2-5/8 [67]	12 [77]	13 [6]
-8SH	2 [51], 3 [76], 4 [102]	8 x 8 [203]	1-5/32 [29]	2 [51]	2 [51]	3-3/4 [95]	21 [135]	17 [8]
	6 [152]							19 [9]

PREFIXES	DESCRIPTION	STRAINER DESIG.	PIPE SIZE	LIST PRICE
ZN415*	D.C.C.I. Body Assembly with Polished Nickel Bronze Top	-6SH	2", 3", 4"	992.00
		-8SH	2", 3", 4"	1,311.00
			6"	1,852.00
ZB415	D.C.C.I. Body Assembly with Polished Bronze Top	-6SH	2", 3", 4"	955.00
		-8SH	2", 3", 4"	1,215.00
			6"	1,759.00
Z415	D.C.C.I. Body Assembly ONLY (add "-L/Top" to product sku)	No Strainer	2", 3", 4"	194.00
			6"	739.00

OUTLETS (SPECIFY PIPE SIZE IN INCHES AND TYPE OF OUTLET)				
OUTLET TYPE		PIPE SIZE/ OUTLET TYPE	E BODY HT. DIM.	ADD
IP	Threaded	2IP	2-7/16"	80.00
		3IP	2-3/4"	80.00
		4IP	2-13/16"	80.00
		6IP	2-7/8"	80.00
NH	No-Hub	2NH, 3NH, 4NH	3-13/16"	N/C
NL	Neo-Loc	2NL, 3NL, 4NL	3-7/8"	N/C

SUFFIXES			ADD
–AR	Acid Resisting Epoxy Coated Cast Iron		171.00
–G	Galvanized Cast Iron		198.00
–P	Trap Primer Connection (1/2"*)		N/C
⏲ –SA	Stabilizer Assembly (See Z1035)		138.00
⏲ –SQ	Stabilizer Q-deck (See Z1035-Q)		184.00
⏲ –SR	Stabilizer Ring (See Z400-SR)		121.00
⏲ –TC	Neo-Loc Test Cap Gasket (2", 3", 4" NL Bottom Outlet Only)		24.00
–U	1"-3" High Extension Adapter (See Z400-U)	D.C.	140.00
		Galv.	306.00
	For each additional 1" above 3"		98.00
–V	Backwater Valve (Not Available with -Y)		380.00
–VP	Vandal-Proof Secured Top		58.00
–Y	Sediment Bucket (Not Available with -V)		109.00
–90	90° Threaded Side Outlet Body Assembly (2" and 3" Only)		219.00

SEE LEGACY ADDENDUM ON PAGE 369 FOR MORE INFORMATION

For additional product information, please visit www.zurn.com

**Regularly furnished unless otherwise specified.*

Items designated as Best Sellers are most specified and are generally in stock for shipment.

⏲ This symbol denotes a product that is engineered to reduce installation and rework time.

Z415 BODY ASSEMBLY WITH "TYPE SL" STRAINER

ENGINEERING SPECIFICATION

Zurn ZN415SL floor and shower drain features Dura-Coated cast iron body with bottom outlet, combination invertible membrane clamp and adjustable collar with seepage slots, and "TYPE SL" polished, nickel bronze square, wide flanged, light-duty strainer.

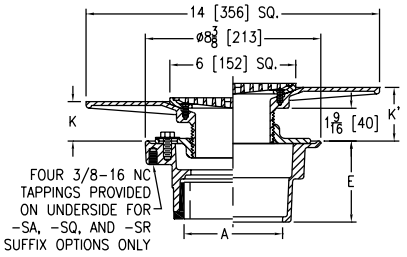

Strainer Designation	Dimensions in inches [mm]					Str. Open Area sq in [cm²]	Approximate Weight lb [kg]
	A Pipe Size	K		K'			
		Min.	Max.	Min.	Max.		
-6SL	2 [51], 3 [76], 4 [102]	1-1/4 [32]	2-15/16 [75]	1-3/4 [44]	3-1/6 [80]	14 [90]	21 [10]

PREFIXES	DESCRIPTION	STRAINER DESIG.	PIPE SIZE	LIST PRICE
ZN415*	D.C.C.I. Body Assembly with Polished Nickel Bronze Top	-6SL	2", 3", 4"	1,392.00
ZB415	D.C.C.I. Body Assembly with Polished Bronze Top	-6SL	2", 3", 4"	1,336.00
Z415	D.C.C.I. Body Assembly ONLY (add "-L/Top" to product sku)	No Strainer	2", 3", 4"	194.00

OUTLETS (SPECIFY PIPE SIZE IN INCHES AND TYPE OF OUTLET)

OUTLET TYPE		PIPE SIZE/ OUTLET TYPE	E BODY HT. DIM.	ADD
IC	Inside Caulk	2IC, 3IC, 4IC	4-13/16"	N/C
IP	Threaded	2IP	2-7/16"	80.00
		3IP	2-3/4"	80.00
		4IP	2-13/16"	80.00
NH	No-Hub	2NH, 3NH, 4NH	3-13/16"	N/C
NL	Neo-Loc	2NL, 3NL, 4NL	3-7/8"	N/C

SUFFIXES			ADD
–AR	Acid Resisting Epoxy Coated Cast Iron		171.00
–CP	Chrome-Plated Bronze Top		26.00
–G	Galvanized Cast Iron		380.00
–P	Trap Primer Connection (1/2"*)		N/C
◷ –PC	Protective Cover		64.00
◷ –TC	Neo-Loc Test Cap Gasket (2", 3", 4" NL Bottom Outlet Only)		24.00
–U	1"-3" High Extension Adapter (See Z400-U)	D.C.	140.00
		Galv.	306.00
	For each additional 1" above 3"		98.00
–V	Backwater Valve (Not Available with -Y)		380.00
–VP	Vandal-Proof Secured Top		58.00
–Y	Sediment Bucket (Not Available with -V)		109.00
–90	90° Threaded Side Outlet Body Assembly (2" and 3" Only)		219.00

**Regularly furnished unless otherwise specified.*

Items designated as Best Sellers are most specified and are generally in stock for shipment.

◷ This symbol denotes a product that is engineered to reduce installation and rework time.

For additional product information, please visit www.zurn.com

Z415 BODY ASSEMBLY WITH "TYPE SZ" LEVELING STRAINER

Patented

ENGINEERING SPECIFICATION

Zurn ZN415SZ Floor and shower drain features Dura-Coated cast iron body with bottom outlet, combination invertible membrane clamp, and adjustable collar with seepage slots and "TYPE SZ" polished nickel bronze, light-duty, square leveling strainer.

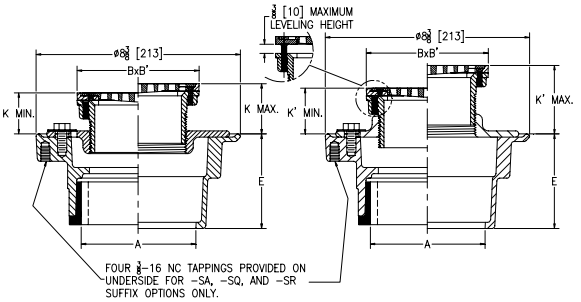

Strainer Designation	Dimensions in inches [mm]						Str. Open Area sq in [cm²]	Approximate Weight lb [kg]
	A Pipe Size	B x B' Strainer Top Size	K		K'			
			Min.	Max.	Min.	Max.		
-5SZ	2 [51], 3 [76]	5 x 5 [127]	1-11/16 [43]	2-1/16 [52]	1-13/16 [46]	2-13/16 [71]	8 [52]	11 [5]
-6SZ	2 [51], 3 [76], 4 [102]	6 x 6 [152]					13 [84]	13 [6]

PREFIXES	DESCRIPTION	STRAINER DESIG.	PIPE SIZE	LIST PRICE
ZN415*	D.C.C.I. Body Assembly with Polished Nickel Bronze Top	-5SZ	2", 3"	645.00
		-6SZ	2", 3", 4"	719.00
ZB415	D.C.C.I. Body Assembly with Polished Bronze Top	-5SZ	2", 3"	592.00
		-6SZ	2", 3", 4"	680.00
ZS415	D.C.C.I. Body Assembly with Polished Type 304 (CF8) Stainless Steel Top	-5SZ	2", 3"	POA
		-6SZ	2", 3", 4"	POA

OUTLETS (SPECIFY PIPE SIZE IN INCHES AND TYPE OF OUTLET)				
OUTLET TYPE		PIPE SIZE/ OUTLET TYPE	E BODY HT. DIM.	ADD
IC	Inside Caulk	2IC, 3IC, 4IC	4-13/16"	N/C
IG	Inside Gasket	2IG, 3IG, 4IG	4-13/16"	N/C
IP	Threaded	2IP	2-7/16"	80.00
		3IP	2-3/4"	80.00
		4IP	2-13/16"	80.00
NH	No-Hub	2NH, 3NH, 4NH	3-13/16"	N/C
NL	Neo-Loc	2NL, 3NL, 4NL	3-7/8"	N/C

SUFFIXES			ADD
-AA	All Acid Resisting Epoxy		261.00
–AR	Acid Resisting Epoxy Coated Cast Iron		171.00
–CP	Chrome-Plated Bronze Top		26.00
-DP	Decorative Polished Top		171.00
–G	Galvanized Cast Iron		198.00
–P	Trap Primer Connection (1/2"*)		N/C
–PC	Protective Cover		64.00
–SA	Stabilizer Assembly (See Z1035)		138.00
–SQ	Stabilizer Q-deck (See Z1035-Q)		184.00
–SR	Stabilizer Ring (See Z400-SR)		121.00
–TC	Neo-Loc Test Cap Gasket (2", 3", 4" NL Bottom Outlet Only)		24.00
–U	1"-3" High Extension Adapter (See Z400-U)	D.C.	140.00
		Galv.	306.00
	For each additional 1" above 3"		98.00
–V	Backwater Valve (Not Available with -Y)		380.00
–VP	Vandal-Proof Secured Top		58.00
–Y	Sediment Bucket (Not Available with -V)		109.00
–90	90° Threaded Side Outlet Body Assembly (2" and 3" Only)		219.00

BEST SELLERS	LIST PRICE
ZN415-3NH-6SZ	719.00
ZN415-3NL-6SZ-P	719.00

For additional product information, please visit www.zurn.com

**Regularly furnished unless otherwise specified.*

Items designated as Best Sellers are most specified and are generally in stock for shipment.

This symbol denotes a product that is engineered to reduce installation and rework time.

Z420 DEEP SHANK FLOOR AND SHOWER DRAIN FOR MARBLE AND GRANITE APPLICATIONS

ENGINEERING SPECIFICATION

Zurn ZN420 deep shank floor and shower drain features white acid resisting coated cast iron body and invertible membrane clamp with seepage slots, polished nickel bronze adjustable head with 2" N.P.S.M. shank, and 4" diameter round, secured strainer.

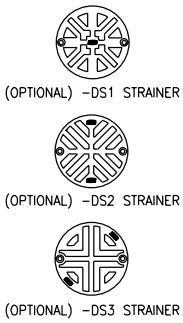

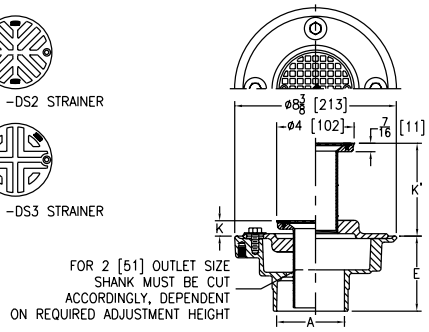

Dimensions in inches [mm]					Str. Open Area sq in [cm²]	Approximate Weight lb [kg]
	K		K'			
A Pipe Size	Min.	Max.	Min.	Max.		
2 [51], 3 [76], 4 [102]	13/16 [21]	3-3/4 [95]	1-1/4 [32]	4-13/16 [122]	5 [32]	15 [7]
6 [152]						13 [6]

PREFIXES	DESCRIPTION	PIPE SIZE	LIST PRICE
ZN420*	White A.R.C. Cast Iron Body and Collar with Polished Nickel Bronze Top	2", 3", 4"	668.00
		6"	1,867.00
ZB420	White A.R.C. Cast Iron Body and Collar with Polished Bronze Top	2", 3", 4"	633.00
		6"	1,652.00

OUTLETS (SPECIFY PIPE SIZE IN INCHES AND TYPE OF OUTLET)

OUTLET TYPE		PIPE SIZE/ OUTLET TYPE	E BODY HT. DIM.	ADD
IC	Inside Caulk	2IC, 3IC, 4IC	4-13/16"	N/C
IP	Threaded	2IP	2-7/16"	80.00
		3IP	2-3/4"	80.00
		4IP	2-13/16"	80.00
		6IP	2-7/8"	80.00
NH	No-Hub	2NH, 3NH, 4NH	3-13/16"	N/C
NL	Neo-Loc	2NL, 3NL, 4NL	3-7/8"	N/C

SUFFIXES		ADD
–DS1	Decorative Strainer	N/C
–DS2	Decorative Strainer	N/C
–DS3	Decorative Strainer	N/C
–G	Galvanized Cast Iron	190.00
–P	Trap Primer Connection (1/2"*)	N/C
◷ –SA	Stabilizer Assembly (See Z1035)	138.00
◷ –SQ	Stabilizer Q-deck (See Z1035-Q)	184.00
◷ –SR	Stabilizer Ring (See Z400-SR)	121.00
◷ –TC	Neo-Loc Test Cap Gasket (2", 3", 4" NL Bottom Outlet Only)	24.00
–VP	Vandal-Proof Secured Top	58.00

-DS1 Option

-DS2 Option

-DS3 Option

*Regularly furnished unless otherwise specified.

Items designated as Best Sellers are most specified and are generally in stock for shipment.

◷ *This symbol denotes a product that is engineered to reduce installation and rework time.*

For additional product information, please visit www.zurn.com

Z450 DRUM TRAP DRAIN WITH "TYPE B" STRAINER

ENGINEERING SPECIFICATION

Zurn ZN450B drum trap floor and shower drain features Dura-Coated cast iron body with integral trap, side outlet, seepage pan, and adjustable "TYPE B" polished, nickel bronze strainer.

NOTES

For other available strainer variations, see our Z400 Strainer Series. Add price for required strainer to "BODY ONLY" price in chart. Specify strainer designation required.

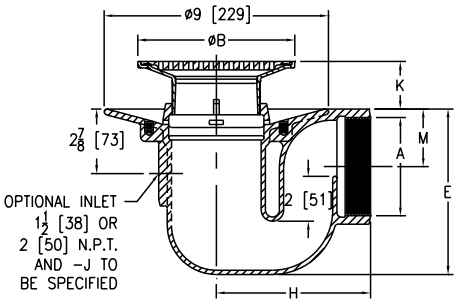

Strainer Designation	Dimensions in inches [mm]								Str. Open Area sq in [cm²]	Approximate Weight lb [kg]
	A Pipe Size	B Diameter	H		K		M			
			IP	NH	Min.	Max.	IP	NH		
-5B	2 [51]	5 [127]	6-1/16 [154]	11 [279]	7/8 [22]	2 [51]	1-15/32 [37]	2 [51]	8 [52]	18 [8]
	3 [76]		6-7/16 [164]				2-3/32 [53]	2-9/16 [65]		
	4 [102]		6-7/8 [175]				2-19/32 [66]	2-19/32 [66]		
-6B	2 [51]	6 [152]	6-1/16 [154]		1-1/8 [29]	2-1/4 [57]	1-15/32 [37]	2 [51]	9 [58]	19 [9]
	3 [76]		6-7/16 [164]				2-3/32 [53]	2-9/16 [65]		
	4 [102]		6-7/8 [175]				2-19/32 [66]	2-19/32 [66]		
-8B	2 [51]	8 [203]	6-1/16 [154]		1-1/2 [38]	2-5/8 [67]	1-15/32 [37]	2 [51]	18 [116]	33 [15]
	3 [76]		6-7/16 [164]				2-3/32 [53]	2-9/16 [65]		
	4 [102]		6-7/8 [175]				2-19/32 [66]	2-19/32 [66]		

PREFIXES	DESCRIPTION	STRAINER DESIG.	PIPE SIZE	LIST PRICE
ZN450B*	D.C.C.I. Body Assembly with Polished Nickel Bronze Top	-5B	2", 3"	854.00
			4"	1,180.00
		-6B	2", 3"	960.00
			4"	1,287.00
		-8B	2", 3"	1,218.00
			4"	1,546.00
ZB450B	D.C.C.I. Body Assembly with Polished Bronze Top	-5B	2", 3"	829.00
			4"	1,155.00
		-6B	2", 3"	901.00
			4"	1,230.00
		-8B	2", 3"	1,175.00
			4"	1,501.00
Z450	D.C.C.I. Body Assembly ONLY (add "-L/Top" to product sku)	No Strainer	2", 3"	561.00
			4"	889.00

OUTLETS (SPECIFY PIPE SIZE IN INCHES AND TYPE OF OUTLET)				
OUTLET TYPE		PIPE SIZE/ OUTLET TYPE	E BODY HT. DIM.	ADD
IP	Threaded	2IP, 3IP	6-17/32"	N/C
		4IP	7-7/16"	N/C
NH	No-Hub	2NH, 3NH	7-7/16"	N/C
		4NH	7-7/16"	N/C

SUFFIXES			ADD
–C	Clamp Collar		N/C
–G	Galvanized Cast Iron		413.00
–P	Trap Primer Connection (1/2"*)		150.00
⏲ –PC	Protective Cover		64.00
–U	1"-3" High Extension Adapter (See Z400-U)	D.C.	140.00
		Galv.	306.00
	For each additional 1" above 3"		98.00
–V	Backwater Valve (Not Available with -Y) (Ball Float Type)		388.00
–VP	Vandal-Proof Secured Top		58.00
–Y	Sediment Bucket (Not Available with -V)		109.00

For additional product information, please visit www.zurn.com

**Regularly furnished unless otherwise specified.*

Items designated as Best Sellers are most specified and are generally in stock for shipment.

⏲ *This symbol denotes a product that is engineered to reduce installation and rework time.*

Z451 SHALLOW TRAP DRAIN WITH "TYPE B" STRAINER

ENGINEERING SPECIFICATION

Zurn ZN451B Shallow trap floor and shower drain features Dura-Coated cast iron body with bottom outlet, combination invertible membrane clamp and adjustable collar with seepage slots, adjustable "TYPE B" polished, nickel bronze, heel-proof strainer, and cast iron shallow trap body with 2" or 3" waterway and threaded side outlet.

NOTES

For other available strainer variations, see our Z400 Strainer Series. Add price for required strainer to "BODY ONLY" price in chart. Specify strainer designation required.

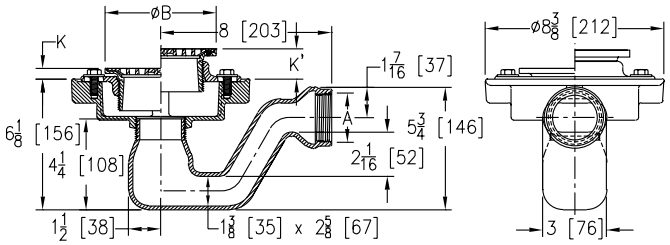

-2IP Option Shown

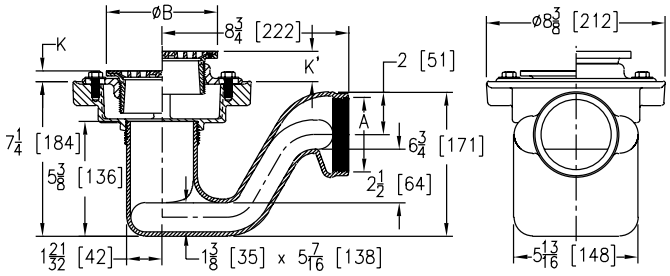

-3IP Option Shown

Strainer Designation	Dimensions in inches [mm]						Str. Open Area sq in [cm²]	Approximate Weight lb [kg]
	A Pipe Size	B Diameter	K		K'			
			Min.	Max.	Min.	Max.		
-5B	2 [51], 3 [76]	5 [127]	1 [25]	1-1/2 [38]	1-3/32 [27]	2-1/4 [57]	8 [52]	15 [7]
-6B		6 [152]		1-25/32 [45]	1-13/32 [36]	2-17/32 [64]	9 [58]	18 [8]
-7B		7 [178]		2-1/8 [54]	1-23/32 [44]	2-7/8 [73]	12 [77]	20 [9]
-8B	3 [76]	8 [203]	1-5/32 [29]		1-3/4 [44]		18 [116]	21 [10]

PREFIXES	DESCRIPTION	STRAINER DESIG.	PIPE SIZE	LIST PRICE
ZN451B*	D.C.C.I. Body Assembly with Polished Nickel Bronze Top	-5B	2", 3"	850.00
		-6B	2", 3"	955.00
		-7B	2", 3"	1,045.00
		-8B	3"	1,215.00
ZB451B	D.C.C.I. Body Assembly with Polished Bronze Top	-5B	2", 3"	824.00
		-6B	2", 3"	899.00
		-7B	2", 3"	1,009.00
		-8B	3"	1,172.00
Z451	D.C.C.I. Body Assembly ONLY (add "-L/Top" to product sku)	No Strainer	2", 3"	517.00

OUTLETS (SPECIFY PIPE SIZE IN INCHES AND TYPE OF OUTLET)				
OUTLET TYPE		PIPE SIZE/ OUTLET TYPE	E BODY HT. DIM.	ADD
IP	Threaded	2IP, 3IP	6-17/32"	N/C

SUFFIXES			ADD
–CP	Chrome-Plated Bronze Top		26.00
–G	Galvanized Cast Iron		391.00
–P	Trap Primer Connection (1/2"*)		N/C
⏲ –PC	Protective Cover		64.00
–U	1"-3" High Extension Adapter (See Z400-U)	D.C.	140.00
		Galv.	306.00
	For each additional 1" above 3"		98.00
–V	Backwater Valve (Not Available with -Y)		380.00
–VP	Vandal-Proof Secured Top		58.00
–Y	Sediment Bucket (Not Available with -V)		109.00

*Regularly furnished unless otherwise specified.

Items designated as Best Sellers are most specified and are generally in stock for shipment.

⏲ This symbol denotes a product that is engineered to reduce installation and rework time.

Z453 DEEP SEAL TRAP DRAIN WITH "TYPE B" STRAINER

ENGINEERING SPECIFICATION

Zurn ZN453B deep seal trap floor and shower drain features Dura-Coated cast iron body with uniform diameter integral trap, side outlet, seepage pan, and adjustable "TYPE B" polished, nickel bronze light-duty strainer.

NOTES

For other available strainer variations, see our Z400 Strainer Series. Add price for required strainer to "BODY ONLY" price in chart. Specify strainer designation required.

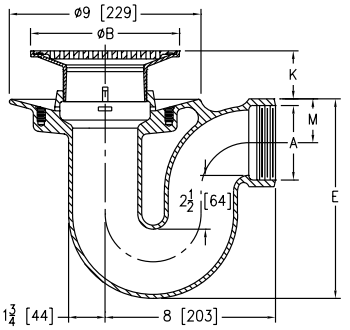

Strainer Designation	Dimensions in inches [mm]					Str. Open Area sq in [cm²]	Approximate Weight lb [kg]
	A Pipe Size	B Diameter	K		M		
			Min.	Max.			
-5B	2 [51], 3 [76]	5 [127]	3/4 [19]	1-7/8 [48]	2-1/8 [54]	8 [52]	30 [14]
	4 [102]						
-6B	2 [51], 3 [76]	6 [152]	1-1/8 [29]	2-1/8 [54]		9 [58]	31 [14]
	4 [102]						32 [15]
-7B	2 [51], 3 [76]	7 [178]	1-3/8 [35]	2-1/2 [64]		12 [77]	33 [15]
	4 [102]						
-8B	4 [102]	8 [203]				18 [116]	

PREFIXES	DESCRIPTION	STRAINER DESIG.	PIPE SIZE	LIST PRICE
ZN453B*	D.C.C.I. Body Assembly with Polished Nickel Bronze Top	-5B	2″	950.00
			3″, 4″	1,045.00
		-6B	2″, 3″	1,054.00
			4″	1,151.00
		-7B	2″, 3″	1,146.00
			4″	1,239.00
		-8B	4″	1,413.00
ZB453B	D.C.C.I. Body Assembly with Polished Bronze Top	-5B	2″, 3″	926.00
			4″	1,022.00
		-6B	2″, 3″	999.00
			4″	1,094.00
		-7B	2″, 3″	1,110.00
			4″	1,206.00
		-8B	4″	1,367.00
Z453	D.C.C.I. Body Assembly ONLY (add "-L/Top" to product sku)	No Strainer	2″, 3″	660.00
			4″	756.00

OUTLETS (SPECIFY PIPE SIZE IN INCHES AND TYPE OF OUTLET)

OUTLET TYPE		PIPE SIZE/ OUTLET TYPE	E BODY HT. DIM.	ADD
IP	Threaded	2IP, 3IP, 4IP	9-3/8″	N/C
NH	No-Hub	2NH, 3NH, 4NH	9-3/8″	N/C

SUFFIXES			ADD
–C	Clamp Collar		N/C
–P	Trap Primer Connection (1/2″*)		150.00
⏲ –PC	Protective Cover		64.00
–U	1″-3″ High Extension Adapter (See Z400-U)	D.C.	140.00
		Galv.	306.00
	For each additional 1″ above 3″		98.00
–VP	Vandal-Proof Secured Top		58.00
–Y	Sediment Bucket		109.00

SEE LEGACY ADDENDUM ON PAGE 369 FOR MORE INFORMATION

For additional product information, please visit www.zurn.com

**Regularly furnished unless otherwise specified.*

Items designated as Best Sellers are most specified and are generally in stock for shipment.

⏲ *This symbol denotes a product that is engineered to reduce installation and rework time.*

Z455 TRAP DRAIN WITH FLOOR CLEANOUT WITH "TYPE B" STRAINER

ENGINEERING SPECIFICATION

Zurn ZN455B floor and shower trap drain features Dura-Coated cast iron body with integral trap, side outlet, seepage pan, floor level cleanout, and adjustable "TYPE B" polished, nickel bronze, light-duty strainer.

NOTES

For other available strainer variations, see our Z400 Strainer Series. Add price for required strainer to "BODY ONLY" price in chart. Specify strainer designation required.

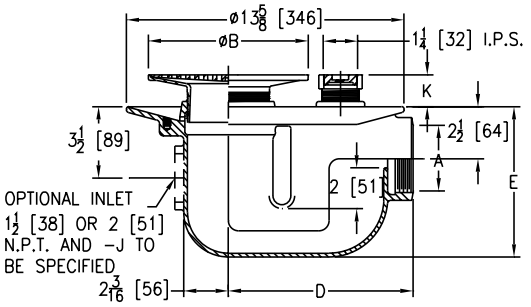

Strainer Designation	Dimensions in inches [mm]				Str. Open Area sq in [cm²]	Approximate Weight lb [kg]
	A Pipe Size	B Diameter	K			
			Min.	Max.		
-5B	2 [51], 3 [76], 4 [102]	5 [127]	7/8 [22]	2 [51]	8 [52]	37 [17]
-6B		6 [152]	1-1/8 [29]	2-1/4 [57]	9 [58]	39 [18]
-7B		7 [178]	1-1/2 [38]	2-5/8 [67]	12 [77]	41 [19]
-8B		8 [203]			18 [116]	43 [20]

PREFIXES	DESCRIPTION	STRAINER DESIG.	PIPE SIZE	LIST PRICE
ZN455B*	D.C.C.I. Body Assembly with Polished Nickel Bronze Top	-5B	2", 3", 4"	1,415.00
		-6B	2", 3", 4"	1,522.00
		-7B	2", 3", 4"	1,610.00
		-8B	2", 3", 4"	1,781.00
Z455	D.C.C.I. Body Assembly ONLY (add "-L/Top" to product sku)	No Strainer	2", 3", 4"	1,125.00

OUTLETS (SPECIFY PIPE SIZE IN INCHES AND TYPE OF OUTLET)

OUTLET TYPE		PIPE SIZE/ OUTLET TYPE	E BODY HT. DIM.	ADD
IP	Threaded	2IP, 3IP	7-3/8"	N/C
		4IP	7-3/8"	N/C
NH	No-Hub	2NH, 3NH, 4NH	7-3/8"	N/C

SUFFIXES		ADD
–C	Clamping Collar	N/C
-FC	Flush Cover for Plug	116.00
–P	Trap Primer Connection (1/2"*)	150.00
⏲ –PC	Protective Cover	64.00
–V	Backwater Valve-Ball Float Type (Not Available with -Y)	399.00
–VP	Vandal-Proof Secured Top	58.00
–Y	Sediment Bucket (Not Available with -V)	109.00

SEE LEGACY ADDENDUM ON PAGE 369 FOR MORE INFORMATION

**Regularly furnished unless otherwise specified.*

Items designated as Best Sellers are most specified and are generally in stock for shipment.

⏲ This symbol denotes a product that is engineered to reduce installation and rework time.

For additional product information, please visit www.zurn.com

Z456 DEEP SEAL TRAP DRAIN WITH FLOOR CLEANOUT AND CLAMP COLLAR WITH "TYPE B" STRAINER

ENGINEERING SPECIFICATION

Zurn ZN456B floor and shower drain features Dura-Coated cast iron body, deep seal integral trap with clamp collar, seepage pan, floor level cleanout, and adjustable "Type B" polished, nickel bronze strainer.

NOTES

For other available strainer variations, see our Z400 Strainer Series. Add price for required strainer to "BODY ONLY" price in chart. Specify strainer designation required.

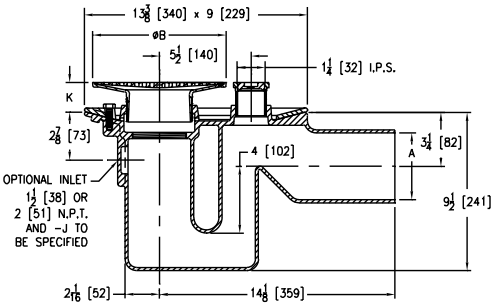

Strainer Designation	Dimensions in inches [mm]				Str. Open Area sq in [cm²]	Approximate Weight lb [kg]
	A Pipe Size	B Diameter	K			
			Min.	Max.		
-5B	2 [51], 3 [76], 4 [102]	5 [127]	1-1/4 [32]	2 [51]	8 [52]	41 [19]
-6B		6 [152]	1-1/8 [29]	2-1/4 [57]	9 [58]	43 [20]
-7B		7 [178]	1-1/2 [38]	2-5/8 [67]	12 [77]	45 [20]
-8B		8 [203]			18 [116]	47 [21]

PREFIXES	DESCRIPTION	STRAINER DESIG.	PIPE SIZE	LIST PRICE
ZN456B*	D.C.C.I. Body Assembly with Polished Nickel Bronze Top	-5B	2", 3", 4"	1,447.00
		-6B	2", 3", 4"	1,556.00
		-7B	2", 3", 4"	1,642.00
		-8B	2", 3", 4"	1,813.00
Z456	D.C.C.I. Body Assembly ONLY (add "-L/Top" to product sku)	No Strainer	2", 3", 4"	1,158.00

OUTLETS (SPECIFY PIPE SIZE IN INCHES AND TYPE OF OUTLET)			
OUTLET TYPE		PIPE SIZE/OUTLET TYPE	ADD
NH	No-Hub	2NH, 3NH, 4NH	N/C

SUFFIXES		ADD
–AR	Acid Resisting Epoxy Coated Cast Iron	781.00
–G	Galvanized Cast Iron	462.00
–P	Trap Primer Connection (1/2"*)	150.00
⏲ –PC	Protective Cover	64.00
–V	Backwater Valve-Ball Float Type (Not Available with -Y)	399.00
–VP	Vandal-Proof Secured Top	58.00
–Y	Sediment Bucket (Not Available with -V)	109.00

BEST SELLER	LIST PRICE
ZN456-2NH-5B	1,447.00

For additional product information, please visit www.zurn.com

**Regularly furnished unless otherwise specified.*

Items designated as Best Sellers are most specified and are generally in stock for shipment.

⏲ *This symbol denotes a product that is engineered to reduce installation and rework time.*

Z460B SHALLOW BODY FLOOR DRAIN WITH SIDE OUTLET AND "TYPE B" STRAINER

ENGINEERING SPECIFICATION

Zurn ZN460B shallow body floor and shower drain features Dura-Coated cast iron body with side outlet, seepage slots, and integral threaded connection for "TYPE B" polished nickel bronze light-duty strainer.

NOTES

For other available strainer variations, see our Z400 Strainer Series. Add price for required strainer to "BODY ONLY" price in chart. Specify strainer designation required.

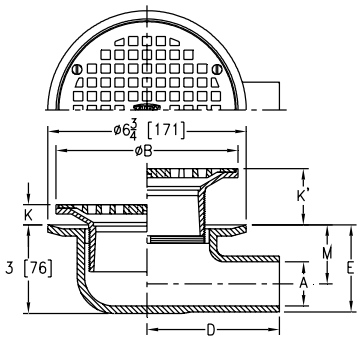

Strainer Designation	Dimensions in inches [mm]					Str. Open Area sq in [cm²]	Approximate Weight lb [kg]
	A Pipe Size	B Diameter	K Min.	K Max.	M		
-5B	1-1/2 [38]	5 [127]	15/32 [12]	1-5/8 [41]	2 [51]	8 [52]	8 [4]
	2 [51]				1-25/32 [45]		
-6B	1-1/2 [38]	6 [152]	11/16 [17]	1-29/32 [48]	2 [51]	9 [58]	9 [4]
	2 [51]				1-25/32 [45]		
-7B	1-1/2 [38]	7 [178]	1 [25]	2-1/4 [57]	2 [51]	12 [77]	10 [5]
	2 [51]				1-25/32 [45]		

PREFIXES	DESCRIPTION	STRAINER DESIG.	PIPE SIZE	LIST PRICE
ZN460B*	D.C.C.I. Body Assembly with Polished Nickel Bronze Top	-5B	1-1/2", 2"	637.00
		-6B	1-1/2", 2"	744.00
		-7B	1-1/2", 2"	833.00
ZB460B	D.C.C.I. Body Assembly with Polished Bronze Top	-5B	1-1/2", 2"	614.00
		-6B	1-1/2", 2"	687.00
		-7B	1-1/2", 2"	798.00
Z460	D.C.C.I. Body Assembly ONLY (add "-L/Top" to product sku)	No Strainer	1-1/2", 2"	352.00

OUTLETS (SPECIFY PIPE SIZE IN INCHES AND TYPE OF OUTLET)				
OUTLET TYPE		PIPE SIZE/ OUTLET TYPE	E BODY HT. DIM.	ADD
IP	Threaded	1-1/2IP	3-5/32"	80.00
		2IP	3-7/32"	80.00
NH	No-Hub	1-1/2NH, 2NH	2-31/32"	N/C

SUFFIXES		ADD
-C	Clamp Collar	86.00
-CP	Chrome-Plated Bronze Top	26.00
-G	Galvanized Cast Iron	295.00
–PC	Protective Cover	64.00
-VP	Vandal-Proof Secured Top	58.00
-Y	Sediment Bucket	109.00

BEST SELLERS	LIST PRICE
ZB460-2IP-5B-VP-G	967.00
ZB460-2NH-5B-C-CP	726.00
ZN460-2NH-5B	637.00

**Regularly furnished unless otherwise specified.*

Items designated as Best Sellers are most specified and are generally in stock for shipment.

This symbol denotes a product that is engineered to reduce installation and rework time.

For additional product information, please visit www.zurn.com

Z461 6″ SQUARE MODULAR NON-ADJUSTABLE FLOOR DRAIN WITH CLAMPING FRAME

ENGINEERING SPECIFICATION

Zurn Z461 floor and shower drain features Dura-Coated cast iron, low profile body with 2″ bottom outlet, combination nickel bronze membrane clamp and frame with seepage slots, and square heel-proof, slotted, light-duty, secured strainer.

A Pipe Size inch [mm]	Grate Open Area sq in [cm²]	Approximate Weight lb [kg]
2 [51]	13 [84]	5 [2]

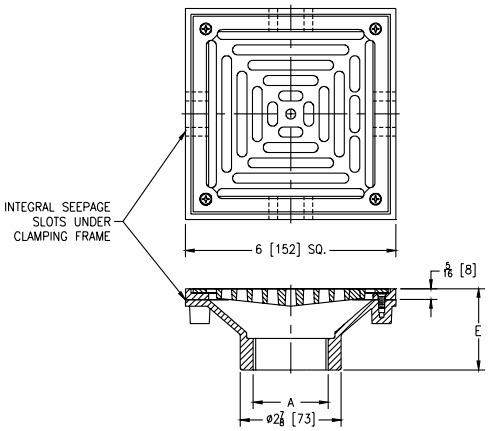

PREFIXES	DESCRIPTION	PIPE SIZE	LIST PRICE
ZN461*	D.C.C.I. Body Assembly with Polished Bronze Top	2″	755.00

OUTLETS (SPECIFY PIPE SIZE IN INCHES AND TYPE OF OUTLET)				
OUTLET TYPE		PIPE SIZE/ OUTLET TYPE	E BODY HT. DIM.	ADD
IP	Threaded	2IP	2-5/16″	N/C

SUFFIXES		ADD
-AR	Acid Resisting Epoxy Coated Cast Iron	171.00
-CP	Chrome-Plated Top	26.00
-DP	Decorative Polished Top	171.00
-G	Galvanized Cast Iron	198.00
⏲ -PC	Protective Cover	64.00
-VP	Vandal-Proof Secured Top	58.00

Z503 15″ HEAVY-DUTY AREA DRAIN

ENGINEERING SPECIFICATION

Zurn Z503 15″ diameter top drain features Dura-Coated cast iron body with bottom outlet, seepage pan, and heavy-duty, anti-tilt, slotted grate.

NOTES

†Add 3/16″ to 2″ dimension for ZB and ZN

A Pipe Size inch [mm]	Grate Open Area sq in [cm²]	Approximate Weight lb [kg]
3 [76], 4 [102], 5 [127], 6 [152], 8 [203]	45 [290]	90 [41]

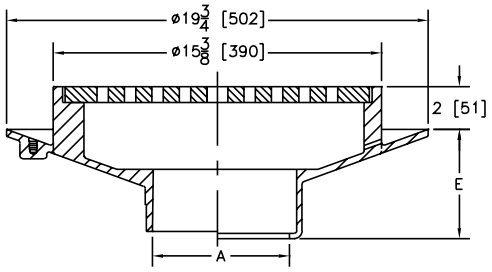

PREFIXES	DESCRIPTION	PIPE SIZE	LIST PRICE
Z503*	D.C.C.I. Body and Top	3″, 4″, 5″, 6″, 8″	2,715.00
ZB503	D.C.C.I. Body Assembly with Polished Bronze Top	3″, 4″, 5″, 6″, 8″	3,794.00
ZN503	D.C.C.I. Body Assembly with Polished Nickel Bronze Top	3″, 4″, 5″, 6″, 8″	4,025.00

OUTLETS (SPECIFY PIPE SIZE IN INCHES AND TYPE OF OUTLET)				
OUTLET TYPE		PIPE SIZE/OUTLET TYPE	E BODY HT. DIM.	ADD
IC	Inside Caulk	3IC, 4IC, 5IC, 6IC	5-1/8″	N/C
		8IC	5-5/8″	N/C
IG	Inside Gasket	3IG, 4IG, 6IG	5-1/8″	N/C
IP	Threaded	3IP, 4IP, 5IP, 6IP, 8IP	3″	80.00
NL	Neo-Loc	4NL	3-7/8″	N/C

SUFFIXES		ADD
–AR	Acid Resisting Epoxy Coated Cast Iron	923.00
–C	Clamp Collar	N/C
–DG	Duresist Grate	655.00
–G	Galvanized Cast Iron	1,049.00
–S	Secondary Strainer	98.00
⏲ –TC	Neo-Loc Test Cap Gasket (2″, 3″, 4″ NL Bottom Outlet Only)	24.00
–TS	Top Secured with Slotted Screws	129.00
–V	Backwater Valve-Ball Float Type	–
–VP	Vandal-Proof Secured Top	147.00
–Y	Sediment Bucket	314.00

BEST SELLER	LIST PRICE
Z503-4NL	2,715.00

For additional product information, please visit www.zurn.com

**Regularly furnished unless otherwise specified.*

Items designated as Best Sellers are most specified and are generally in stock for shipment.

⏲ This symbol denotes a product that is engineered to reduce installation and rework time.

Z505 12″ HEAVY-DUTY DRAIN

ENGINEERING SPECIFICATION

Zurn Z505 12″ diameter top drain features Dura-Coated cast iron body with bottom outlet, seepage pan and combination membrane flashing clamp and frame for heavy-duty, deep flange, slotted grate.

NOTES

†Add 3/16″ to 2″ dimension and 3/4″ to 12-1/4″ dimension for ZB and ZN

A Pipe Size inch [mm]	Grate Open Area sq in [cm²]	Approximate Weight lb [kg]
2 [51], 3 [76], 4 [102], 6 [152]	30 [194]	38 [17]
8 [203]		40 [18]

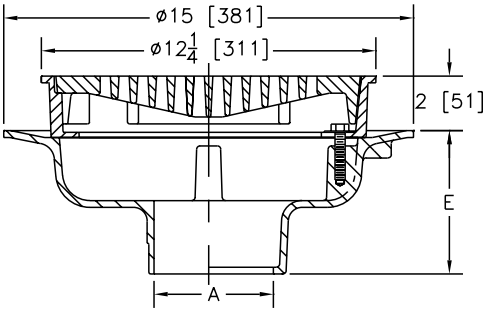

PREFIXES	DESCRIPTION	PIPE SIZE	LIST PRICE
Z505*	D.C.C.I. Body and Top	2″, 3″, 4″, 6″	1,271.00
		8″	1,576.00
ZB505	D.C.C.I. Body Assembly with Polished Bronze Top	2″, 3″, 4″, 6″	1,906.00
		8″	2,206.00
ZN505	D.C.C.I. Body Assembly with Polished Nickel Bronze Top	2″, 3″, 4″, 6″	2,011.00
		8″	2,316.00

OUTLETS (SPECIFY PIPE SIZE IN INCHES AND TYPE OF OUTLET)				
OUTLET	TYPE	PIPE SIZE/OUTLET TYPE	E BODY HT. DIM.	ADD
IC	Inside Caulk	3IC, 4IC, 6IC	5-1/4″	N/C
IG	Inside Gasket	3IG, 4IG, 6IG	5-1/4″	N/C
IP	Threaded	2IP, 3IP, 4IP, 6IP, 8IP	3-3/4″	80.00
NH	No-Hub	2NH, 3NH, 4NH, 6NH, 8NH	5-1/4″	N/C
NL	Neo-Loc	2NL, 3NL, 4NL	4-5/8″	N/C

SUFFIXES			ADD
-AR	Acid Resisting Epoxy Coated Cast Iron		850.00
-D	Dome Grate	Z	140.00
		ZB	417.00
		ZN	489.00
–DG	Duresist Grate		261.00
–F	Extension Frame - Per Inch (Specifiy Height)		125.00
–G	Galvanized Cast Iron		646.00
–HP	Heel-Proof Grate		N/C
–HT	Square Hinged Grate		245.00
–P	Trap Primer Connection		150.00
–S	Secondary Strainer		62.00
◷ -SA	Stabilizer Assembly (See Z1036)		148.00
–SC	Solid Cover		582.00
–SS	Stainless Mesh Liner for Bucket		417.00
–T	Square Top		228.00
◷ –TC	Neo-Loc Test Cap Gasket (2″, 3″, 4″ NL Bottom Outlet Only)		24.00
–TS	Top Secured with Slotted Screws		149.00
–TSP	Trap Seal Protection Device (Size Matches Drain Outlet Selected, See Z1072)		POA
–V	Backwater Valve-Ball Float Type		–
–VP	Vandal-Proof Secured Top		132.00
–Y	Sediment Bucket		257.00
–90	90° Threaded Side Outlet Body Assembly (2″, 3″, 4″, 6″ Only)		365.00

BEST SELLERS	LIST PRICE
Z505-3NH	1,271.00
Z505-3NH-Y	1,528.00
Z505-3NL	1,271.00
Z505-4NH	1,271.00
Z505-4NH-P	1,421.00
Z505-4NH-P-Y	1,678.00
Z505-4NH-Y	1,528.00
Z505-4NL	1,271.00
Z505-4NL-DG-Y	1,789.00
Z505-4NL-P-VP-Y	1,810.00
Z505-4NL-P-Y	1,678.00
Z505-4NL-Y	1,528.00
Z505-6NH	1,271.00
Z505-6NH-VP-Y	1,660.00
Z505-6NL-Y	1,528.00
Z505-8NH	1,576.00

**Regularly furnished unless otherwise specified.*

Items designated as Best Sellers are most specified and are generally in stock for shipment.

◷ This symbol denotes a product that is engineered to reduce installation and rework time.

For additional product information, please visit www.zurn.com

Z507 7″ MEDIUM-DUTY DRAIN

ENGINEERING SPECIFICATION

Zurn Z507 7″ diameter top drain features Dura-Coated cast iron body with bottom outlet, seepage pan, and combination membrane flashing clamp and frame for medium-duty, cast iron, deep flange, slotted grate.

NOTES

†Add 3/16″ to 1-1/2″or 1-15/16″ dimension for ZN

A Pipe Size inch [mm]	Grate Open Area sq in [cm²]	Approximate Weight lb [kg]
3 [76], 4 [102]	9 [58]	15 [7]

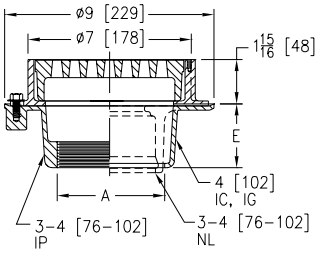

PREFIXES	DESCRIPTION	PIPE SIZE	LIST PRICE
Z507*	D.C.C.I. Body and Top	3″, 4″	438.00
ZN507	D.C.C.I. Body Assembly with Polished Nickel Bronze Top	3″, 4″	742.00

OUTLETS (SPECIFY PIPE SIZE IN INCHES AND TYPE OF OUTLET)				
OUTLET TYPE		PIPE SIZE/ OUTLET TYPE	E BODY HT. DIM.	ADD
IC	Inside Caulk	4IC	2-3/4″	N/C
IG	Inside Gasket	4IG	2-3/4″	N/C
IP	Threaded	3IP, 4IP	2-3/4″	80.00
NL	Neo-Loc	3NL, 4NL	3″	N/C

SUFFIXES		ADD
–AR	Acid Resisting Epoxy Coated Cast Iron	850.00
–F	2″ Extension Frame	140.00
–G	Galvanized Cast Iron	211.00
–P	Trap Primer Connection	150.00
–S	Secondary Strainer	47.00
◷ –TC	Neo-Loc Test Cap Gasket (3″, 4″ NL Bottom Outlet Only)	24.00
–TS	Top Secured with Slotted Screws	129.00
–VP	Vandal-Proof Secured Top	149.00
–Y	Sediment Bucket	61.00

BEST SELLER	LIST PRICE
Z507-4NH	438.00

For additional product information, please visit www.zurn.com

**Regularly furnished unless otherwise specified.*

Items designated as Best Sellers are most specified and are generally in stock for shipment.

◷ This symbol denotes a product that is engineered to reduce installation and rework time.

Z508 9″ EXTRA-HEAVY-DUTY DRAIN

ENGINEERING SPECIFICATION

Zurn Z508 9″ diameter top drain features Dura-Coated cast iron body with bottom outlet, seepage pan, and combination membrane flashing clamp and frame for extra heavy-duty, cast iron, deep flange, slotted grate.

NOTES

†Add 3/16″ to 2″ dimension and 3/4″ to 9″ dimension for ZB and ZN

A Pipe Size inch [mm]	Grate Open Area sq in [cm²]	Approximate Weight lb [kg]
2 [51], 3 [76], 4 [102]	18 [116]	21 [10]
6 [152]		25 [11]

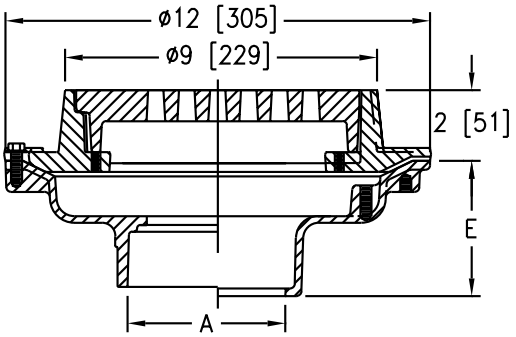

PREFIXES	DESCRIPTION	PIPE SIZE	LIST PRICE
Z508*	D.C.C.I. Body and Top	2″, 3″, 4″	668.00
		6″	798.00
ZB508	D.C.C.I. Body Assembly with Polished Bronze Top	2″, 3″, 4″	1,117.00
		6″	1,254.00
ZN508	D.C.C.I. Body Assembly with Polished Nickel Bronze Top	2″, 3″, 4″	1,215.00
		6″	1,355.00

OUTLETS (SPECIFY PIPE SIZE IN INCHES AND TYPE OF OUTLET)				
OUTLET TYPE		PIPE SIZE/ OUTLET TYPE	E BODY HT. DIM.	ADD
IC	Inside Caulk	4IC	3-3/4″	N/C
IG	Inside Gasket	4IG	3-3/4″	N/C
IP	Threaded	4IP	2-3/4″	80.00
NH	No-Hub	2NH, 3NH, 4NH	4-3/4″	N/C
		6NH	5-1/4″	N/C
NL	Neo-Loc	2NL, 3NL, 4NL	3-9/16″	N/C

SUFFIXES		ADD
–AR	Acid Resisting Epoxy Coated Cast Iron	501.00
–DG	Duresist Grate	194.00
–G	Galvanized Cast Iron	393.00
–HP	Heel-Proof Grate	N/C
–P	Trap Primer Connection	165.00
–S	Secondary Strainer	47.00
–SC	Solid Cover with Lift Handle	483.00
–SG	Solid Gasketed Cover with Handle	580.00
◷ –TC	Neo-Loc Test Cap Gasket (2″, 3″, 4″ NL Bottom Outlet Only)	24.00
–TS	Top Secured with Slotted Screws	129.00
–TSP	Trap Seal Protection Device (Size Matches Drain Outlet Selected, See Z1072)	POA
–VP	Vandal-Proof Secured Top	149.00
–Y	Sediment Bucket	140.00
–90	90° Threaded Side Outlet Body Assembly (2″, 3″, 4″)	339.00

BEST SELLERS	LIST PRICE
Z508-2NH-P	833.00
Z508-3NH	668.00
Z508-3NH-HP	668.00
Z508-3NH-Y	808.00
ZN508-3NH-Y	1,355.00
Z508-3NL	668.00
Z508-3NL-Y	808.00
Z508-4NH	668.00
Z508-4NH-P-Y	973.00
Z508-4NH-Y	808.00
ZN508-4NH-Y	1,355.00
Z508-4NL	668.00
Z508-4NL-DG-Y	1,002.00
Z508-4NL-P	833.00
Z508-4NL-Y	808.00
Z508-6NH	798.00

**Regularly furnished unless otherwise specified.*

Items designated as Best Sellers are most specified and are generally in stock for shipment.

◷ This symbol denotes a product that is engineered to reduce installation and rework time.

For additional product information, please visit www.zurn.com

Z509 12″ HEAVY-DUTY DRAIN

ENGINEERING SPECIFICATION

Zurn Z509 12″ diameter top drain features Dura-Coated cast iron body with bottom outlet, seepage pan, and combination membrane flashing clamp and frame for heavy-duty tractor grate.

NOTES

†Add 3/16 ″ to 1-3/4″ dimension and 3/4″ to 12-1/4″ dimension for ZB and ZN

A Pipe Size inch [mm]	Grate Open Area sq in [cm²]	Approximate Weight lb [kg]
3 [76], 4 [102], 6 [152]	30 [194]	38 [17]

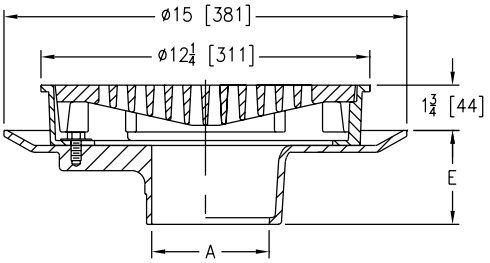

PREFIXES	DESCRIPTION	PIPE SIZE	LIST PRICE
Z509*	D.C.C.I. Body and Top	3″, 4″, 6″	1,139.00
ZB509	D.C.C.I. Body Assembly with Polished Bronze Top	3″, 4″, 6″	1,768.00
ZN509	D.C.C.I. Body Assembly with Polished Nickel Bronze Top	3″, 4″, 6″	1,864.00

OUTLETS (SPECIFY PIPE SIZE IN INCHES AND TYPE OF OUTLET)				
OUTLET TYPE		PIPE SIZE/OUTLET TYPE	E BODY HT. DIM.	ADD
IC	Inside Caulk	3IC, 4IC, 6IC	3-1/2″	N/C
IG	Inside Gasket	3IG, 4IG, 6IG	3-1/2″	N/C
IP	Threaded	3IP, 4IP, 6IP	3-1/2″	80.00
NH	No-Hub	3NH, 4NH	3-1/2″	N/C
		6NH (IP w/Z1040)	6″	N/C
NL	Neo-Loc	3NL, 4NL	2-5/8″	N/C

SUFFIXES			ADD
–AR	Acid Resisting Epoxy Coated Cast Iron		850.00
–DG	Duresist Grate		261.00
–DX	Dex-O-Tex Flange (Z and ZN Only)		781.00
–G	Galvanized Cast Iron		565.00
–HP	Heel-Proof Grate		N/C
–P	Trap Primer Connection		150.00
–PH	Grate with 3/8″ Dia. Openings (Z only)		520.00
–S	Secondary Strainer		58.00
–T	Square Top	Z	344.00
		ZB	433.00
		ZN	489.00
◷ –TC	Neo-Loc Test Cap Gasket (2″, 3″, 4″ NL Bottom Outlet Only)		24.00
–TS	Top Secured with Slotted Screws		129.00
–TSP	Trap Seal Protection Device (Size Matches Drain Outlet Selected, See Z1072)		POA
–V	Backwater Valve-Ball Float Type (See Z1099)		–
–VP	Vandal-Proof Secured Top		149.00
–Y	Sediment Bucket		206.00

BEST SELLERS	LIST PRICE
Z509-3NH-P-S-Y	1,553.00
Z509-3NL	1,139.00
Z509-3NL-HP	1,139.00
Z509-3NL-P-S-Y	1,553.00
Z509-3NL-S-Y	1,403.00
Z509-4IP-AR-DG-VP-Y	2,685.00
Z509-4NH	1,139.00
Z509-4NH-AR-VP-Y	2,344.00
Z509-4NH-DG	1,400.00
Z509-4NL	1,139.00
Z509-4NL-DG-Y	1,606.00
Z509-4NL-P-Y	1,495.00
Z509-4NL-Y	1,345.00

For additional product information, please visit www.zurn.com

**Regularly furnished unless otherwise specified.*

Items designated as Best Sellers are most specified and are generally in stock for shipment.

◷ This symbol denotes a product that is engineered to reduce installation and rework time.

Z511 9″ HEAVY-DUTY DRAIN

ENGINEERING SPECIFICATION

Zurn Z511 9″ diameter top drain features Dura-Coated cast iron, deep sump body with bottom outlet, seepage pan, and combination membrane flashing clamp and frame for heavy-duty, cast iron, deep flange grate.

NOTES

†Add 3/16″ to 2″ dimension and 3/4″to 9″ dimension for ZB and ZN

A Pipe Size inch [mm]	Grate Open Area sq in [cm²]	Approximate Weight lb [kg]
2 [51], 3 [76], 4 [102]	18 [116]	40 [18]

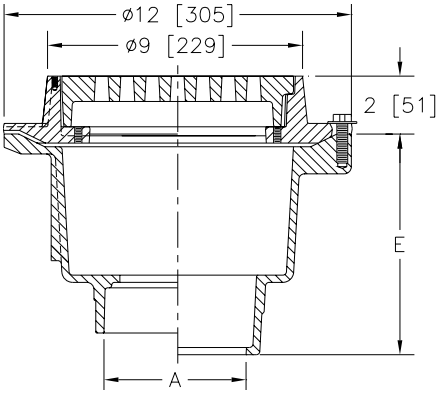

PREFIXES	DESCRIPTION	PIPE SIZE	LIST PRICE
Z511*	D.C.C.I. Body and Top	2″, 3″, 4″	1,358.00
ZB511	D.C.C.I. Body Assembly with Polished Bronze Top	2″, 3″, 4″	1,781.00
ZN511	D.C.C.I. Body Assembly with Polished Nickel Bronze Top	2″, 3″, 4″	1,864.00

OUTLETS (SPECIFY PIPE SIZE IN INCHES AND TYPE OF OUTLET)

OUTLET TYPE		PIPE SIZE/ OUTLET TYPE	E BODY HT. DIM.	ADD
IC	Inside Caulk	3IC, 4IC	7-5/8″	N/C
IG	Inside Gasket	3IG, 4IG	7-5/8″	N/C
NL	Neo-Loc	2NL, 3NL, 4NL	6-7/8″	N/C
IP	Threaded	3IP, 4IP	7-5/8″	N/C

SUFFIXES		ADD
–AR	Acid Resisting Epoxy Coated Finish	949.00
–BT	Bell Trap	194.00
–DG	Duresist Grate	194.00
–F	Extension Frame - Per Inch (Specify Height)	98.00
–G	Galvanized Cast Iron	561.00
–HP	Heel-Proof Grate	N/C
–J	Auxiliary Inlet Connection (Specify 1-1/2″ or 2″ IP, Number and Location)	345.00
–P	Trap Primer Connection	150.00
–S	Secondary Strainer	58.00
–SC	Solid Cover w/ Lift Handle	483.00
–SG	Solid Gasketed Cover	580.00
◷ –TC	Neo-Loc Test Cap Gasket (2″, 3″, 4″ NL Bottom Outlet Only)	24.00
–TS	Top Secured with Slotted Screws	129.00
–TSP	Trap Seal Protection Device (Size Matches Drain Outlet Selected, See Z1072)	POA
–V	Backwater Valve-Ball Float Type (Not Available with -Y)	615.00
–VP	Vandal-Proof Secured Top	149.00
–W	Winter Closure Plug (3IC, 4IC, 3IP, 4IP & 3IG Connections Only)	615.00
–Y	Sediment Bucket (Not Available with -V)	194.00

BEST SELLERS	LIST PRICE
Z511-4NL	1,358.00
Z511-4NL-P-TC-Y	1,726.00
Z511-4NL-P-Y	1,702.00
Z511-4NL-Y	1,552.00
ZN511-4NL-AR-P-S-Y	3,215.00

**Regularly furnished unless otherwise specified.*

Items designated as Best Sellers are most specified and are generally in stock for shipment.

◷ This symbol denotes a product that is engineered to reduce installation and rework time.

For additional product information, please visit www.zurn.com

Z512 12-1/4″ HEAVY-DUTY DRAIN

ENGINEERING SPECIFICATION

Zurn Z512 12-1/4″ diameter top drain features Dura-Coated cast iron deep sump body with bottom outlet, seepage pan, and combination flashing clamp and frame for heavy-duty tractor grate.

NOTES

†Add 3/16″ to 2-1/8″ dimension and 3/4″ to 12-1/4″ dimension for ZB and ZN

A Pipe Size inch [mm]	Grate Open Area sq in [cm²]	Approximate Weight lb [kg]
3 [76], 4 [102], 6 [152]	30 [194]	44 [20]

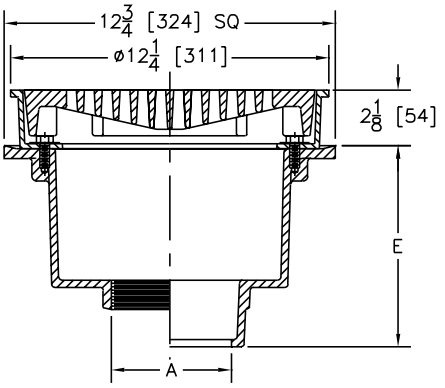

PREFIXES	DESCRIPTION	PIPE SIZE	LIST PRICE
Z512*	D.C.C.I. Body and Top	3″, 4″, 6″	1,391.00
ZB512	D.C.C.I. Body Assembly with Polished Bronze Top	3″, 4″, 6″	2,023.00
ZN512	D.C.C.I. Body Assembly with Polished Nickel Bronze Top	3″, 4″, 6″	2,111.00

OUTLETS (SPECIFY PIPE SIZE IN INCHES AND TYPE OF OUTLET)

OUTLET TYPE		PIPE SIZE/ OUTLET TYPE	E BODY HT. DIM.	ADD
IC	Inside Caulk	4IC, 6IC	7-3/4″	N/C
IG	Inside Gasket	4IG, 6IG	7-3/4″	N/C
IP	Threaded	4IP, 6IP	6-5/16″	80.00
NL	Neo-Loc	3NL, 4NL	7-1/4″	N/C
NH	No-Hub	3NH, 4NH, 6NH	7-13/16″	N/C

SUFFIXES			ADD
-AR	Acid Resistant Epoxy Coated Cast Iron		774.00
–DG	Duresist Grate		261.00
–G	Galvanized Cast Iron		623.00
–S	Secondary Strainer		62.00
–SS	Stainless Mesh Liner for Bucket		417.00
–T	Square Top	Z	343.00
		ZB	433.00
		ZN	489.00
◷ –TC	Neo-Loc Test Cap Gasket (3″, 4″ NL Bottom Outlet Only)		24.00
–TS	Top Secured with Slotted Screws		129.00
–VP	Vandal-Proof Secured Top		149.00
–Y	Sediment Bucket		326.00

BEST SELLERS	LIST PRICE
Z512-4NH-Y	1,717.00
Z512-4NL-Y	1,717.00

For additional product information, please visit www.zurn.com

**Regularly furnished unless otherwise specified.*

Items designated as Best Sellers are most specified and are generally in stock for shipment.

◷ This symbol denotes a product that is engineered to reduce installation and rework time.

Z513 9″ SQUARE HINGED HEAVY-DUTY DRAIN

ENGINEERING SPECIFICATION

Zurn Z513 9″ square top drain features Dura-Coated cast iron deep sump body with bottom outlet, seepage pan and combination membrane flashing clamp and frame for hinged, heavy-duty, slotted grate with suspended sediment bucket.

NOTES

†Add 3/16″ to 2-5-/16″ dimension and 3/4″ to 9″ dimension for ZB and ZN

A Pipe Size inch [mm]	Grate Open Area sq in [cm²]	Approximate Weight lb [kg]
3 [76], 4 [102]	20 [129]	57 [26]

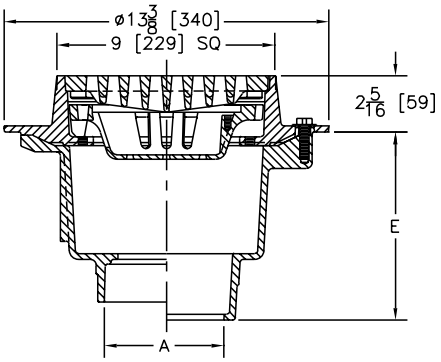

PREFIXES	DESCRIPTION	PIPE SIZE	LIST PRICE
Z513*	D.C.C.I. Body and Top	3″, 4″	1,917.00
ZB513	D.C.C.I. Body Assembly with Polished Bronze Top	3″, 4″	2,651.00
ZN513	D.C.C.I. Body Assembly with Polished Nickel Bronze Top	3″, 4″	2,849.00

OUTLETS (SPECIFY PIPE SIZE IN INCHES AND TYPE OF OUTLET)				
OUTLET TYPE		PIPE SIZE/ OUTLET TYPE	E BODY HT. DIM.	ADD
NL	Neo-Loc	3NL, 4NL	6-5/8″	N/C

SUFFIXES		ADD
–AR	Acid Resisting Epoxy Coated Cast Iron	732.00
–G	Galvanized Cast Iron	501.00
–HL	Hinged Locking Grate	314.00
–P	Trap Primer Connection	150.00
–SS	Stainless Steel Mesh Liner for Bucket	206.00
◷ –TC	Neo-Loc Test Cap Gasket (3″, 4″ NL Bottom Outlet Only)	24.00
–VP	Vandal-Proof Secured Top	149.00

BEST SELLERS	LIST PRICE
ZN513-3NL	2,849.00
ZN513-3NL-P	2,999.00
Z513-4NL	1,917.00
ZB513-4NL-AR-HL-SS	3,903.00

**Regularly furnished unless otherwise specified.*

Items designated as Best Sellers are most specified and are generally in stock for shipment.

◷ This symbol denotes a product that is engineered to reduce installation and rework time.

For additional product information, please visit www.zurn.com

Z520 9″ ADJUSTABLE HEAVY-DUTY DRAIN

ENGINEERING SPECIFICATION

Zurn Z520 9″ diameter top drain features Dura-Coated cast iron body with bottom outlet, seepage pan with clamping collar, and adjustable extension frame with heavy-duty, cast iron, deep flange, slotted grate.

NOTES

†Add 5/8″ to 9″ dimension for ZN

A Pipe Size inch [mm]	Grate Open Area sq in [cm²]	Approximate Weight lb [kg]
2 [51], 3 [76], 4 [102]	18 [116]	39 [18]
6 [152]		44 [20]

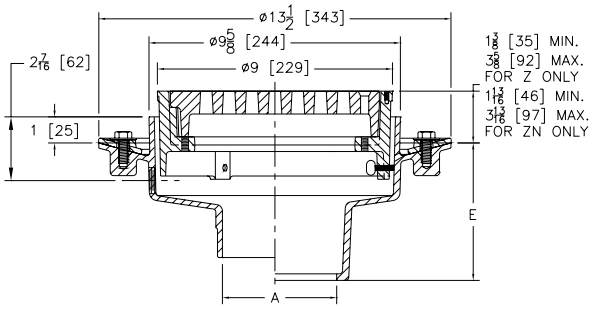

PREFIXES	DESCRIPTION	PIPE SIZE	LIST PRICE
Z520*	D.C.C.I. Body and Top	2″, 3″, 4″	827.00
		6″	1,138.00
ZN520	D.C.C.I. Body with Polished Nickel Bronze Top	2″, 3″, 4″	1,328.00
		6″	1,638.00

OUTLETS (SPECIFY PIPE SIZE IN INCHES AND TYPE OF OUTLET)

OUTLET	TYPE	PIPE SIZE/OUTLET TYPE	E BODY HT. DIM.	ADD
IP	Threaded	2IP, 3IP, 4IP	3-1/2″	80.00
NH	No-Hub	2NH, 3NH, 4NH, 6NH	4-1/4″	N/C
NL	Neo-Loc	2NL, 3NL, 4NL	4-3/8″	N/C

SUFFIXES			ADD
–C	Clamp Collar		N/C
–DG	Duresist Grate		194.00
–F	Extension Frame - 3-1/4″ Min., 5-1/2″ Max. Per Ext. (Specify Height Required)		148.00
–G	Galvanized Cast Iron		433.00
–HP	Heel-Proof Grate		N/C
–P	Trap Primer Connection		150.00
–S	Secondary Strainer		47.00
–SS	Stainless Mesh Liner for Bucket		244.00
–T	Square Top	Z	325.00
		ZN	404.00
⏲ –TC	Neo-Loc Test Cap Gasket (2″, 3″, 4″ NL Bottom Outlet Only)		24.00
–TS	Top Secured with Slotted Screws		129.00
–TSP	Trap Seal Protection Device (Size Matches Drain Outlet Selected, See Z1072)		POA
–V	Backwater Valve (See Z1099)		–
–VP	Vandal-Proof Secured Top		149.00
–Y	Sediment Bucket		140.00
–90	90° Side Outlet Body Assembly (See Z1042, IP x NH Only)		–

BEST SELLERS	LIST PRICE
Z520-3NH-Y	967.00
Z520-3NL	827.00
Z520-4NH	827.00
Z520-4NH-Y	967.00
Z520-4NL	827.00
Z520-4NL-G-VP	1,409.00
Z520-4NL-P	977.00
Z520-4NL-VP	976.00
Z520-4NL-Y	967.00

For additional product information, please visit www.zurn.com

**Regularly furnished unless otherwise specified.*

Items designated as Best Sellers are most specified and are generally in stock for shipment.

⏲ This symbol denotes a product that is engineered to reduce installation and rework time.

Z521 12″ DIAMETER ADJUSTABLE HEAVY-DUTY DRAIN

ENGINEERING SPECIFICATION

Zurn Z521 12″ diameter top drain features Dura-Coated cast iron body with bottom outlet, seepage pan, and adjustable extension frame with heavy-duty tractor grate.

NOTES

†Add 3/16″ to 2-3/4″ through 5″ dimension for ZN

A Pipe Size inch [mm]	Grate Open Area sq in [cm²]	Approximate Weight lb [kg]
3 [76], 4 [102], 6 [152]	30 [194]	60 [27]

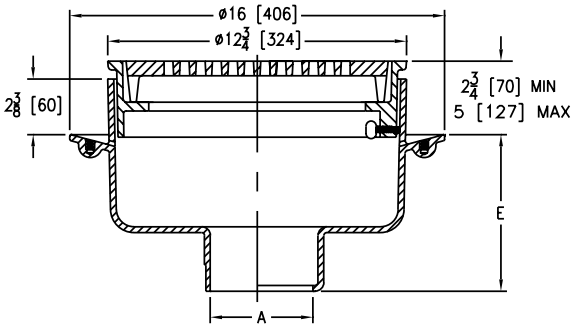

PREFIXES	DESCRIPTION	PIPE SIZE		LIST PRICE
Z521*	D.C.C.I. Body and Top	2″, 3″, 4″, 6″		1,977.00
ZN521	D.C.C.I. Body with Polished Nickel Bronze Top	2″, 3″, 4″, 6″		2,679.00
OUTLETS (SPECIFY PIPE SIZE IN INCHES AND TYPE OF OUTLET)				
OUTLET TYPE		**PIPE SIZE/OUTLET TYPE**	**E BODY HT. DIM.**	**ADD**
IC	Inside Caulk	3IC, 4IC, 6IC	6-5/8″	N/C
IG	Inside Gasket	3IG, 4IG, 6IG	6-5/8″	N/C
IP	Threaded	4IP, 6IP	5-1/4″	80.00
NL	Neo-Loc	4NL	5-7/8″	N/C
SUFFIXES				**ADD**
–C	Clamp Collar			N/C
–DG	Duresist Grate			257.00
–G	Galvanized Cast Iron			729.00
–S	Secondary Strainer			62.00
–T	Square Top		Z	344.00
			ZN	488.00
◷ –TC	Neo-Loc Test Cap Gasket (2″, 3″, 4″ NL Bottom Outlet Only)			24.00
–TS	Top Secured with Slotted Screws			129.00
–V	Backwater Valve (Not Available with -Y) (See Z1099)			-
–VP	Vandal-Proof Secured Top			149.00
–Y	Sediment Bucket (Not Available with -V)			242.00
BEST SELLERS				**LIST PRICE**
Z521-3NH-DG-Y				2,476.00
Z521-4IC				1,977.00
Z521-4NH				1,977.00

**Regularly furnished unless otherwise specified.*

Items designated as Best Sellers are most specified and are generally in stock for shipment.

◷ This symbol denotes a product that is engineered to reduce installation and rework time.

For additional product information, please visit www.zurn.com

Z526 12″ ADJUSTABLE HEAVY-DUTY DRAIN

ENGINEERING SPECIFICATION

Zurn Z526 12″ diameter top drain features Dura-Coated cast iron body with bottom outlet, seepage pan, adjustable extension frame, and heavy-duty slotted grate.

NOTES

†Add 3/16″to 1-3/4″ through 4″ dimension for ZN

A Pipe Size inch [mm]	Grate Open Area sq in [cm²]	Approximate Weight lb [kg]
3 [76], 4 [102], 6 [152]	30 [194]	52 [24]

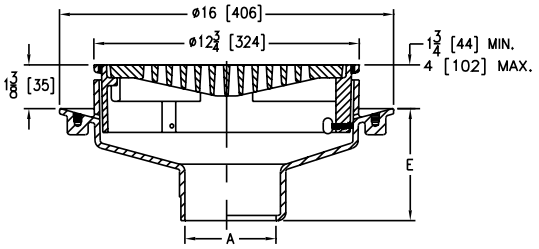

PREFIXES	DESCRIPTION	PIPE SIZE		LIST PRICE
Z526*	D.C.C.I. Body and Top	3″, 4″, 6″		1,471.00
ZN526	D.C.C.I. Body with Polished Nickel Bronze Top	3″, 4″, 6″		2,184.00
OUTLETS (SPECIFY PIPE SIZE IN INCHES AND TYPE OF OUTLET)				
OUTLET	**TYPE**	**PIPE SIZE/OUTLET TYPE**	**E BODY HT. DIM.**	**ADD**
IC	Inside Caulk	3IC, 4IC, 6IC	5-3/8″	N/C
IG	Inside Gasket	4IG, 6IG	5-3/8″	N/C
IP	Threaded	4IP, 6IP	3-3/4″	80.00
NL	Neo-Loc	4NL	4-5/8″	N/C
SUFFIXES				**ADD**
–C	Clamp Collar			N/C
–DG	Duresist Grate			292.00
–G	Galvanized Cast Iron			645.00
–HP	Heel-Proof Grate			N/C
–S	Secondary Strainer			62.00
–T	Square Top		Z	344.00
			ZN	488.00
◷ –TC	Neo-Loc Test Cap Gasket (2″, 3″, 4″ NL Bottom Outlet Only)			24.00
–TS	Top Secured with Slotted Screws			129.00
–V	Backwater Valve (See Z1099)			–
–VP	Vandal-Proof Secured Top			149.00
–90	90° Side Outlet Body Assembly (See Z1042)			–

SEE LEGACY ADDENDUM ON PAGE 369 FOR MORE INFORMATION

**Regularly furnished unless otherwise specified.*

Items designated as Best Sellers are most specified and are generally in stock for shipment.

◷ This symbol denotes a product that is engineered to reduce installation and rework time.

Z530 9″ MEDIUM-DUTY WIDE FLANGE DECK DRAIN

ENGINEERING SPECIFICATION

Zurn Z530 9″ diameter wide flange deck drain for latex decks features Dura-Coated cast iron body with latex troweling flange, flat heel-proof, medium-duty grate, and suspended sediment bucket.

A Pipe Size inch [mm]	Grate Open Area sq in [cm²]	Approximate Weight lb [kg]
2 [51], 3 [76], 4 [102]	18 [116]	49 [22]

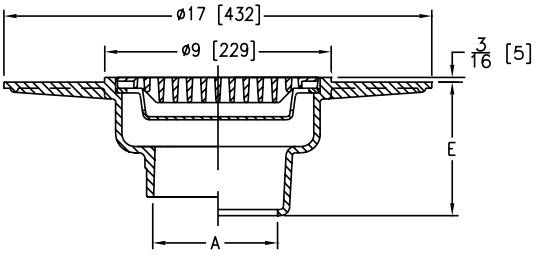

PREFIXES	DESCRIPTION	PIPE SIZE		LIST PRICE
Z530*	D.C.C.I. Body and Top	2″, 3″, 4″		864.00
OUTLETS (SPECIFY PIPE SIZE IN INCHES AND TYPE OF OUTLET)				
OUTLET TYPE		**PIPE SIZE/OUTLET TYPE**	**E BODY HT. DIM.**	**ADD**
IC	Inside Caulk	2IC, 3IC, 4IC	5-1/2″	N/C
IP	Threaded	2IP, 3IP, 4IP	4″	80.00
NL	Neo-Loc	2NL, 3NL, 4NL	4-3/4″	N/C
SUFFIXES				**ADD**
–AR	Acid Resisting Epoxy Coated Cast Iron			764.00
–C	Underdeck Clamp			228.00
–DG	Duresist Grate			217.00
–G	Galvanized Cast Iron			678.00
⏲ –TC	Neo-Loc Test Cap Gasket (2″, 3″, 4″ NL Bottom Outlet Only)			24.00
–TS	Top Secured with Slotted Screws			129.00
–VP	Vandal-Proof Secured Top			149.00
–XJ	Expansion Joint (Use with IP Type Outlet) (See Z190)			–
BEST SELLERS				**LIST PRICE**
Z530-3NH				864.00
Z530-3NL				864.00

Z531 9″ ADJUSTABLE FRAME WIDE FLANGE MEDIUM-DUTY DECK DRAIN

ENGINEERING SPECIFICATION

Zurn Z531 9″ diameter adjustable frame wide flange deck drain features Dura-Coated cast iron body with 10-1/4″ diameter latex troweling flange and combination adjustable latex troweling-edge-form and membrane flashing clamp with flat medium-duty grate.

A Pipe Size inch [mm]	Grate Open Area sq in [cm²]	Approximate Weight lb [kg]
2 [51], 3 [76], 4 [102]	18 [116]	54 [24]

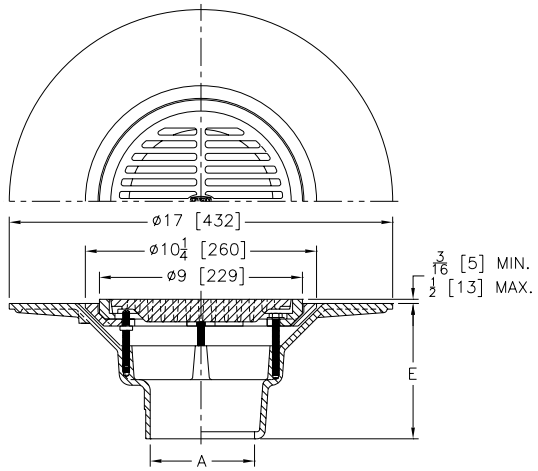

PREFIXES	DESCRIPTION	PIPE SIZE		LIST PRICE
Z531*	D.C.C.I. Body and Top	2″, 3″, 4″		1,396.00
ZN531	D.C.C.I. Body with Polished Nickel Bronze Top	2″, 3″, 4″		1,896.00
OUTLETS (SPECIFY PIPE SIZE IN INCHES AND TYPE OF OUTLET)				
OUTLET TYPE		**PIPE SIZE/OUTLET TYPE**	**E BODY HT. DIM.**	**ADD**
IC	Inside Caulk	2IC, 3IC, 4IC	6″	N/C
IP	Threaded	2IP, 3IP, 4IP	4-1/2″	80.00
NH	No-Hub	2NH, 3NH, 4NH	6″	N/C
NL	Neo-Loc	2NL, 3NL, 4NL	5-3/8″	N/C
SUFFIXES				**ADD**
–C	Underdeck Clamp			165.00
–DG	Duresist Grate			171.00
–G	Galvanized Cast Iron			703.00
–S	Secondary Strainer			47.00
⏲ –TC	Neo-Loc Test Cap Gasket (2″, 3″, 4″ NL Bottom Outlet Only)			24.00
–TS	Top Secured with Slotted Screws			129.00
–VP	Vandal-Proof Secured Top			149.00
–Y	Sediment Bucket			140.00
BEST SELLERS				**LIST PRICE**
Z531-3NH				1,396.00
ZN531-3NH-TS				2,025.00
Z531-4NH				1,396.00

**Regularly furnished unless otherwise specified.*

Items designated as Best Sellers are most specified and are generally in stock for shipment.

⏲ *This symbol denotes a product that is engineered to reduce installation and rework time.*

For additional product information, please visit www.zurn.com

Z532 12-1/4″ DIAMETER WIDE FLANGE HEAVY-DUTY FLOOR DRAIN

ENGINEERING SPECIFICATION

Zurn Z532 12-1/4″ diameter wide flange floor drain features Dura-Coated cast iron body with bottom outlet, seepage pan, combination membrane flashing clamp, and frame with latex troweling flange, heavy-duty slotted grate, and suspended sediment bucket.

A Pipe Size inch [mm]	Grate Open Area sq in [cm²]	Approximate Weight lb [kg]
2 [51], 3 [76], 4 [102], 6 [152]	30 [194]	54 [24]

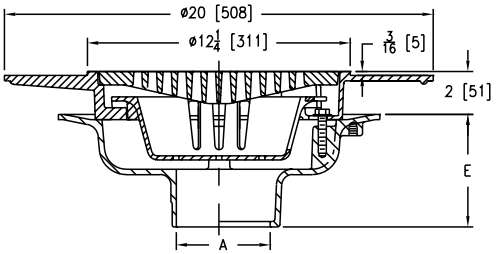

PREFIXES	DESCRIPTION	PIPE SIZE	LIST PRICE
Z532*	D.C.C.I. Body and Top	2″, 3″, 4″, 6″	2,011.00
ZN532	D.C.C.I. Body with Polished Nickel Bronze Top	2″, 3″, 4″, 6″	2,728.00

OUTLETS (SPECIFY PIPE SIZE IN INCHES AND TYPE OF OUTLET)				
OUTLET TYPE		PIPE SIZE/OUTLET TYPE	E BODY HT. DIM.	ADD
IC	Inside Caulk	3IC, 4IC, 6IC	5-1/4″	N/C
IG	Inside Gasket	3IG, 4IG, 6IG	5-1/4″	N/C
NH	No-Hub	2NH, 3NH, 4NH, 6NH	5-1/4″	N/C
NL	Neo-Loc	2NL, 3NL, 4NL	4-1/2″	N/C

SUFFIXES		ADD
–AR	Acid Resistant Epoxy Coating	1,226.00
–DG	Duresist Grate	257.00
–G	Galvanized Cast Iron	910.00
–HP	Heel-Proof Grate	N/C
–TC	Neo-Loc Test Cap Gasket (2″, 3″, 4″ NL Bottom Outlet Only)	24.00
–TS	Top Secured with Slotted Screws	129.00
–VP	Vandal-Proof Secured Top	149.00

BEST SELLERS	LIST PRICE
Z532-3NH	2,011.00
Z532-4NH	2,011.00

Z533 9″ DIAMETER HEAVY-DUTY PARKING DECK DRAIN WITH SUPPORT FLANGE

ENGINEERING SPECIFICATION

Zurn Z533 9″ diameter parking deck drain features Dura-Coated cast iron body with bottom outlet, heavy-duty, gasketed drain support flange with heavy-duty Duresist, slotted grate.

NOTES

†Add 3/16″ to 2″ dimension for ZB and ZN

A Pipe Size inch [mm]	Grate Open Area sq in [cm²]	Approximate Weight lb [kg]
3 [76], 4 [102]	16 [103]	48 [22]

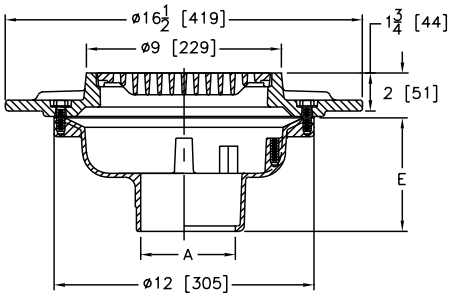

PREFIXES	DESCRIPTION	PIPE SIZE	LIST PRICE
Z533*	D.C.C.I. Body and Top	3″, 4″	1,213.00
ZB533	D.C.C.I. Body with Polished Bronze Top	3″, 4″	1,648.00
ZN533	D.C.C.I. Body with Polished Nickel Bronze Top	3″, 4″	1,754.00

OUTLETS (SPECIFY PIPE SIZE IN INCHES AND TYPE OF OUTLET)				
OUTLET TYPE		PIPE SIZE/OUTLET TYPE	E BODY HT. DIM.	ADD
NH	No-Hub	3NH, 4NH	5-1/4″	N/C
NL	Neo-Loc	3NL, 4NL	4-9/16″	N/C

SUFFIXES		ADD
–C	Underdeck Clamp	150.00
–G	Galvanized Cast Iron	742.00
–TS	Top Secured with Slotted Screws	129.00
–VP	Vandal-Proof Secured Top	149.00
–Y	Sediment Bucket	140.00

BEST SELLERS	LIST PRICE
Z533-3NH	1,213.00
Z533-3NL	1,213.00
Z533-4NH	1,213.00
Z533-4NH-C	1,363.00
Z533-4NH-C-VP	1,512.00
Z533-4NH-VP	1,362.00
Z533-4NL	1,213.00

Z534 12-1/4″ DIAMETER HEAVY-DUTY PARKING DECK DRAIN WITH SUPPORT FLANGE

ENGINEERING SPECIFICATION

Zurn Z534 12-1/4″ diameter parking deck drain features Dura-Coated cast iron body with bottom outlet, heavy-duty, gasketed drain support flange with heavy-duty, slotted grate.

NOTES

†Add 3/16″ to 2″ dimension and 3/4″ to 12-1/4″ dimension for ZB and ZN

A Pipe Size inch [mm]	Grate Open Area sq in [cm²]	Approximate Weight lb [kg]
2 [51], 3 [76], 4 [102], 6 [152]	30 [194]	78 [35]
8 [203]		80 [36]

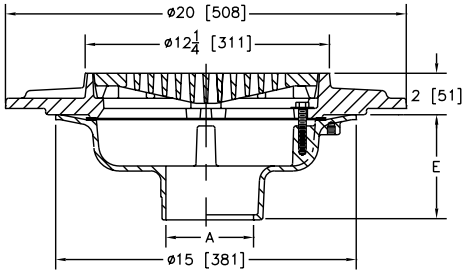

BEST SELLERS	LIST PRICE
ZB534-3NH-HP-VP	3,748.00
Z534-4NH	2,522.00
Z534-4NH-C	2,766.00
Z534-4NH-C-HP-TS	2,895.00
Z534-4NH-C-HP-Y	2,972.00
Z534-4NH-C-Y	2,972.00
Z534-4NH-HP-SA-Y	2,836.00
Z534-4NH-HP-TS-Y	2,857.00
Z534-4NH-HP-Y	2,728.00
Z534-4NH-VP	2,671.00

PREFIXES	DESCRIPTION	PIPE SIZE	LIST PRICE
Z534*	D.C.C.I. Body and Top	2″, 3″, 4″, 6″	2,522.00
		8″	2,823.00
ZB534	D.C.C.I. Body with Polished Bronze Top	2″, 3″, 4″, 6″	3,599.00
		8″	3,900.00
ZN534	D.C.C.I. Body with Polished Nickel Bronze Top	2″, 3″, 4″, 6″	3,824.00
		8″	4,131.00

OUTLETS (SPECIFY PIPE SIZE IN INCHES AND TYPE OF OUTLET)				
OUTLET	TYPE	PIPE SIZE/OUTLET TYPE	E BODY HT. DIM.	ADD
IC	Inside Caulk	3IC, 4IC, 6IC	5-1/4″	N/C
IG	Inside Gasket	3IG, 4IG, 6IG	5-1/4″	N/C
IP	Threaded	2IP, 3IP, 4IP, 6IP, 8IP	3-3/4″	80.00
NH	No-Hub	2NH, 3NH, 4NH, 6NH, 8NH	5-1/4″	N/C
NL	Neo-Loc	2NL, 3NL, 4NL	4-5/8″	N/C

SUFFIXES		ADD
–C	Underdeck Clamp	244.00
–G	Galvanized Cast Iron	1,093.00
–HP	Heel-Proof Grate	N/C
◷ –SA	Stabilizer Assembly (See Z1036)	148.00
◷ –TC	Neo-Loc Test Cap Gasket (2″, 3″, 4″ NL Bottom Outlet Only)	24.00
–TS	Top Secured with Slotted Screws	129.00
–VP	Vandal-Proof Secured Top	149.00
–XJ	Expansion Joint (Use with IP Type Outlet) (See Z190)	–
–Y	Sediment Bucket	206.00

BEST SELLERS	LIST PRICE
Z534-4NL	2,522.00
Z534-4NL-C	2,766.00
ZN534-4NL	3,824.00
Z534-6NH	2,522.00
Z534-6NH-HP-TS	2,651.00
Z534-6NH-VP-Y	2,877.00
Z534-8NH	2,823.00

Z535 HEAVY-DUTY PARKING STRUCTURE DRAIN

ENGINEERING SPECIFICATION

Zurn Z535 square top, heavy-duty drain features oven-cured acid resistant epoxy-coated aluminum or cast iron body with bottom outlet, top membrane clamping collar, anti-ponding slots, sediment bucket and heavy-duty, anti-tilt, hinged, slotted grate with stainless steel hinge pins.

A Pipe Size inch [mm]	Grate Open Area sq in [cm²]	Approximate Weight lb [kg]
3 [76], 4 [102], 6 [152], 8 [203]	56 [361]	29 [13] for aluminum, 75 [34] for cast iron

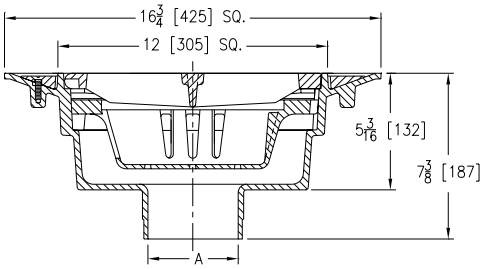

PREFIXES	DESCRIPTION	PIPE SIZE	LIST PRICE
Z535*	A.R.C. Aluminum Body and Top	3″, 4″, 6″, 8″	3,843.00
ZC535	D.C.C.I. Body and Top	3″, 4″, 6″, 8″	3,843.00

OUTLETS (SPECIFY PIPE SIZE IN INCHES AND TYPE OF OUTLET)			
OUTLET	TYPE	PIPE SIZE/OUTLET TYPE	ADD
NH	No-Hub	3NH, 4NH, 6NH, 8NH	N/C

SUFFIXES		ADD
–CI	Cast Iron Grate	462.00
–L	Locking Device	138.00

BEST SELLERS	LIST PRICE
Z535-3NH	3,843.00
Z535-4NH	3,843.00
Z535-6NH	3,843.00

**Regularly furnished unless otherwise specified.*

Items designated as Best Sellers are most specified and are generally in stock for shipment.

◷ This symbol denotes a product that is engineered to reduce installation and rework time.

For additional product information, please visit www.zurn.com

Z536 15-3/8" DIAMETER HEAVY-DUTY PARKING DECK DRAIN WITH SUPPORT FLANGE

ENGINEERING SPECIFICATION

Zurn Z536 15-3/8" diameter parking deck drain features Dura-Coated cast iron body with bottom outlet, heavy-duty, gasketed drain support flange with heavy-duty, slotted grate.

NOTES

†Add 3/16" to 2" dimension for ZN

A Pipe Size inch [mm]	Grate Open Area sq in [cm²]	Approximate Weight lb [kg]
3 [76], 4 [102], 6 [152]	56 [361]	95 [43]
8 [203]		97 [44]

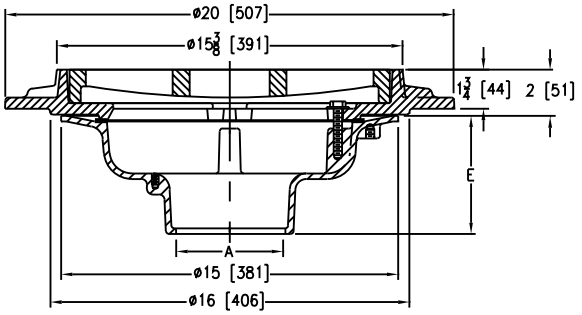

PREFIXES	DESCRIPTION	PIPE SIZE	LIST PRICE
Z536*	D.C.C.I. Body and Top	3", 4", 6"	3,145.00
		8"	3,525.00
ZN536	D.C.C.I. Body with Polished Nickel Bronze Top	3", 4", 6"	4,046.00
		8"	4,425.00

OUTLETS (SPECIFY PIPE SIZE IN INCHES AND TYPE OF OUTLET)

OUTLET	TYPE	PIPE SIZE/OUTLET TYPE	E BODY HT. DIM.	ADD
IP	Threaded	4IP	3-3/4"	80.00
NH	No-Hub	3NH, 4NH, 6NH, 8NH	5-1/4"	N/C
NL	Neo-Loc	3NL, 4NL	4-5/8"	N/C

SUFFIXES		ADD
–C	Underdeck Clamp	244.00
–DG	Duresist Grate	1,202.00
–G	Galvanized Cast Iron	1,093.00
–VP	Vandal-Proof Secured Top	149.00
–Y	Sediment Bucket	314.00

BEST SELLERS	LIST PRICE
Z536-3NL-C	3,389.00
Z536-4NH	3,145.00
Z536-4NH-C-VP-Y	3,852.00
Z536-4NH-VP-Y	3,608.00
Z536-4NH-Y	3,459.00
Z536-4NL	3,145.00
Z536-4NL-G	4,238.00
Z536-4NL-Y	3,459.00
Z536-6NH	3,145.00
Z536-6NH-G-VP	4,387.00
Z536-6NH-VP	3,294.00
Z536-6NH-Y	3,459.00
Z536-6NL-G-VP	4,387.00
Z536-8NH	3,525.00
Z536-8NH-Y	3,839.00

Z537 15-7/8″ SQUARE TOP HEAVY-DUTY PARKING DECK DRAIN WITH SUPPORT FLANGE

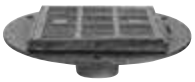

ENGINEERING SPECIFICATION

Zurn Z537 15-7/8″ square top parking deck drain features Dura-Coated cast iron body with bottom outlet, heavy-duty, gasketed drain support flange with heavy-duty, slotted ductile iron grate.

NOTES

†Add 3/16″ to 1-1/2″ dimension for ZN

A Pipe Size inch [mm]	Grate Open Area sq in [cm²]	Approximate Weight lb [kg]
2 [51], 3 [76], 4 [102], 6 [152]	79 [510]	122 [55]
8 [203]		124 [56]

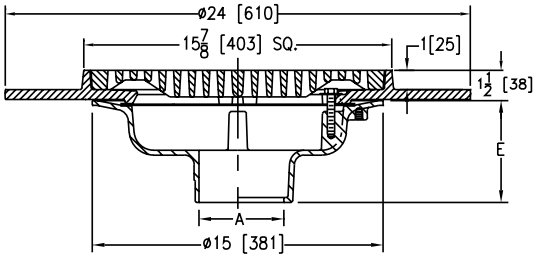

BEST SELLERS	LIST PRICE
Z537-3NH	3,308.00
Z537-3NH-C	3,552.00
Z537-4NH	3,308.00
Z537-4NH-C	3,552.00
Z537-4NH-C-VP-Y	4,015.00

PREFIXES	DESCRIPTION	PIPE SIZE	LIST PRICE
Z537*	D.C.C.I. Body and Top	2″, 3″, 4″, 6″	3,308.00
		8″	3,683.00
ZN537	D.C.C.I. Body with Polished Nickel Bronze Top	2″, 3″, 4″, 6″	4,046.00
		8″	4,425.00

OUTLETS (SPECIFY PIPE SIZE IN INCHES AND TYPE OF OUTLET)

OUTLET	TYPE	PIPE SIZE/OUTLET TYPE	E BODY HT. DIM.	ADD
IP	Threaded	3IP, 4IP, 6IP, 8IP	3-3/4″	80.00
NH	No-Hub	3NH, 4NH, 6NH, 8NH	5-1/4″	N/C
NL	Neo-Loc	2NL, 3NL, 4NL	4-5/8″	N/C

SUFFIXES		ADD
–C	Underdeck Clamp	244.00
–G	Galvanized Cast Iron	1,093.00
–VP	Vandal-Proof Secured Top	149.00
–Y	Sediment Bucket	314.00

BEST SELLERS	LIST PRICE
Z537-4NH-VP	3,457.00
Z537-4NH-VP-Y	3,771.00
Z537-4NH-Y	3,622.00
Z537-4NL	3,308.00
Z537-6NH	3,308.00
Z537-6NH-C	3,552.00
Z537-6NH-C-G-VP-Y	5,108.00
Z537-6NH-C-VP-Y	4,015.00
Z537-6NH-C-Y	3,866.00
Z537-6NL	3,308.00
Z537-8NH	3,683.00

Z539 12-1/4″ HEAVY-DUTY DRAIN WITH DEEP SUMP

ENGINEERING SPECIFICATION

Zurn Z539 12-1/4″ diameter top drain features Dura-Coated cast iron deep sump body with bottom outlet, seepage pan, and combination membrane flashing clamp and frame for sediment bucket and heavy-duty, slotted grate.

NOTES

†Add 3/16″ to 2″ dimension and 3/4″ to 12-1/4″ dimension for ZN

A Pipe Size inch [mm]	Grate Open Area sq in [cm²]	Approximate Weight lb [kg]
3 [76], 4 [102], 6 [152]	30 [194]	68 [31]
8 [203]		

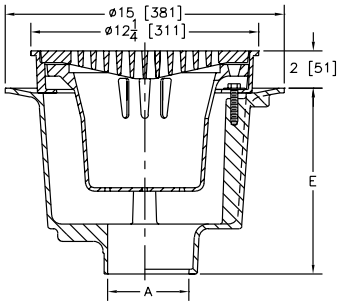

PREFIXES	DESCRIPTION	PIPE SIZE	LIST PRICE
Z539*	D.C.C.I. Body and Top	3″, 4″, 6″	1,781.00
		8″	2,079.00
ZN539	D.C.C.I. Body with Polished Nickel Bronze Top	3″, 4″, 6″	2,561.00
		8″	2,857.00

OUTLETS (SPECIFY PIPE SIZE IN INCHES AND TYPE OF OUTLET)

OUTLET	TYPE	PIPE SIZE/OUTLET TYPE	E BODY HT. DIM.	ADD
NH	No-Hub	3NH, 4NH, 6NH, 8NH	10″	N/C
NL	Neo-Loc	3NL, 4NL	9-5/16″	N/C

SUFFIXES			ADD
–G	Galvanized Cast Iron		1,212.00
–HP	Heel-Proof Grate		N/C
–SS	Stainless Steel Mesh Liner for Bucket		412.00
–T	Square Top	Z	344.00
		ZN	489.00
–TC	Neo-Loc Test Cap Gasket (3″, 4″ NL Bottom Outlet Only)		24.00
–TS	Top Secured with Slotted Screws		129.00
–VP	Vandal-Proof Secured Top		149.00
–YF	Free Standing Bucket		N/C

BEST SELLERS	LIST PRICE
Z539-4NH	1,781.00
ZN539-4NH-T	3,050.00

**Regularly furnished unless otherwise specified.*

Items designated as Best Sellers are most specified and are generally in stock for shipment.

This symbol denotes a product that is engineered to reduce installation and rework time.

For additional product information, please visit www.zurn.com

Z540 12-1/4" MEDIUM-DUTY DRAIN WITH SUR-SET BUCKET

ENGINEERING SPECIFICATION

Zurn Z540 12-1/4" diameter top drain features Dura-Coated cast iron body with bottom outlet, seepage pan, and combination membrane flashing clamp and frame for Sur-Set bucket and medium-duty, slotted grate.

NOTES

†Add 3/16" to 2"] dimension and 3/4" to 12-1/4" dimension for ZN

A Pipe Size inch [mm]	Grate Open Area sq in [cm²]	Approximate Weight lb [kg]
2 [51], 3 [76], 4 [102]	18 [116]	44 [20]
6 [152]		45 [20]
8 [203]		46 [21]

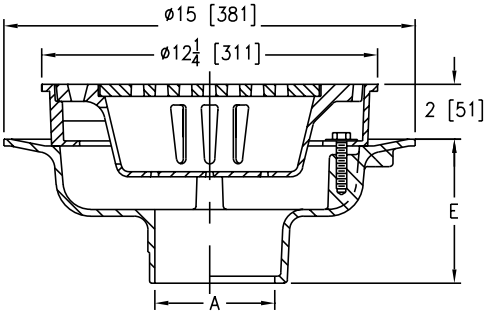

PREFIXES	DESCRIPTION	PIPE SIZE	LIST PRICE
Z540*	D.C.C.I. Body and Top	2", 3", 4", 6"	1,501.00
		8"	1,808.00
ZN540	D.C.C.I. Body with Polished Nickel Bronze Top	2", 3", 4", 6"	2,222.00
		8"	2,525.00

OUTLETS (SPECIFY PIPE SIZE IN INCHES AND TYPE OF OUTLET)

OUTLET	TYPE	PIPE SIZE/OUTLET TYPE	E BODY HT. DIM.	ADD
IC	Inside Caulk	3IC, 4IC, 6IC	5-1/4"	N/C
IG	Inside Gasket	3IG, 4IG, 6IG	5-1/4"	N/C
NH	No-Hub	2NH, 3NH, 4NH, 6NH, 8NH	5-1/4"	N/C
NL	Neo-Loc	2NL, 3NL, 4NL	4-5/8"	N/C

SUFFIXES		ADD
–DG	Duresist Grate	217.00
–G	Galvanized Cast Iron	957.00
–P	Trap Primer Connection	150.00
◷ -SA	Stabililzer Assembly (See Z1036)	148.00
◷ –TC	Neo-Loc Test Cap Gasket (2", 3", 4" NL Bottom Outlet Only)	24.00
–TS	Top Secured with Slotted Screws	129.00
–VP	Vandal-Proof Secured Top	149.00
–90	90° Threaded Side Outlet Body Assembly	365.00

BEST SELLERS	LIST PRICE
Z540-3NH	1,501.00
Z540-3NL	1,501.00
Z540-4NH	1,501.00
Z540-4NH-P	1,651.00
Z540-4NL	1,501.00
ZN540-4NL-P-VP	2,521.00

For additional product information, please visit www.zurn.com

**Regularly furnished unless otherwise specified.*

Items designated as Best Sellers are most specified and are generally in stock for shipment.

◷ This symbol denotes a product that is engineered to reduce installation and rework time.

Z541 12-1/4" DIAMETER HEAVY-DUTY DRAIN

ENGINEERING SPECIFICATION

Zurn Z541 12-1/4" diameter top drain features Dura-Coated cast iron body with bottom outlet, seepage pan, and combination membrane flashing clamp and frame for anti-tilt, heavy-duty, slotted grate with suspended polypropylene sediment bucket.

NOTES

†Add 3/16" to 2" dimension and 3/4" to 12-1/4" dimension for ZB and ZN

A Pipe Size inch [mm]	Grate Open Area sq in [cm²]	Approximate Weight lb [kg]
2 [51], 3 [76], 4 [102]	30 [194]	51 [23]
6 [152]		52 [24]
8 [203]		53 [24]

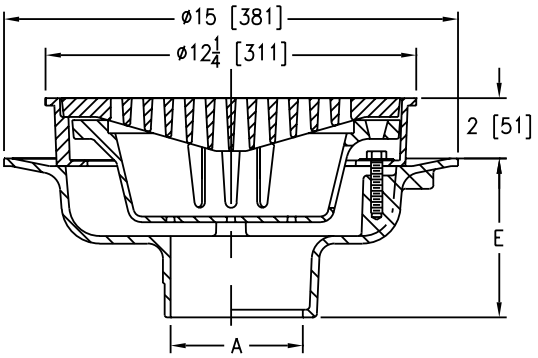

PREFIXES	DESCRIPTION	PIPE SIZE	LIST PRICE
Z541*	D.C.C.I. Body and Top	2", 3", 4", 6"	1,501.00
		8"	1,808.00
ZB541	D.C.C.I. Body with Polished Bronze Top	2", 3", 4", 6"	2,125.00
		8"	2,427.00
ZN541	D.C.C.I. Body with Polished Nickel Bronze Top	2", 3", 4", 6"	2,222.00
		8"	2,525.00

OUTLETS (SPECIFY PIPE SIZE IN INCHES AND TYPE OF OUTLET)				
OUTLET	TYPE	PIPE SIZE/OUTLET TYPE	E BODY HT. DIM.	ADD
IC	Inside Caulk	3IC, 4IC, 6IC	5-1/4"	N/C
IG	Inside Gasket	3IG, 4IG, 6IG	5-1/4"	N/C
IP	Threaded	2IP, 3IP, 4IP, 6IP, 8IP	3-3/4"	80.00
NH	No-Hub	2NH, 3NH, 4NH, 6NH, 8NH	5-1/4"	N/C
NL	Neo-Loc	2NL, 3NL, 4NL	4-5/8"	N/C

SUFFIXES		ADD
–AR	Acid Resisting Epoxy Coated Cast Iron	1,098.00
–DG	Duresist Grate	257.00
–DX	Dex-O-Tex Flange	552.00
–G	Galvanized Cast Iron	957.00
–H	Hinged Grate	242.00
–HP	Heel-Proof Grate	N/C
–P	Trap Primer Connection	150.00
–S	Secondary Strainer	98.00
◷ –SA	Stabilizer Assembly (See Z1036)	148.00
–SS	Stainless Steel Mesh Liner for Bucket	417.00
◷ –TC	Neo-Loc Test Cap Gasket (2", 3", 4" NL Bottom Outlet Only)	24.00
–TG	Tractor Grate	257.00
–TS	Top Secured with Slotted Screws	129.00
–TSP	Trap Seal Protection Device (Size Matches Drain Outlet Selected, See Z1072)	POA
–V	Backwater Valve (See Z1099)	–
–VP	Vandal-Proof Secured Top	149.00
–WS	Wide Slotted Grate (50 sq. in. open)	N/C
–YC	Cast Iron Sediment Bucket	273.00
–90	90° Threaded Side Outlet Body Assembly (2" thru 6")	365.00
		DEDUCT
–LY	Less Sediment Bucket	-325.00

BEST SELLERS	LIST PRICE
Z541-3NH	1,501.00
Z541-3NH-P	1,651.00
ZN541-3NH	2,222.00
Z541-3NL	1,501.00
Z541-3NL-P	1,651.00
Z541-4IP	1,581.00
Z541-4NH	1,501.00
ZB541-4NH	2,125.00
Z541-4NH-DG	1,758.00
Z541-4NH-P	1,651.00
Z541-4NH-TG	1,758.00
ZN541-4NH	2,222.00
Z541-4NL	1,501.00
ZB541-4NL	2,125.00
Z541-4NL-HP	1,501.00
Z541-4NL-P	1,651.00
Z541-4NL-VP	1,650.00
ZN541-4NL	2,222.00
Z541-6NH	1,501.00
ZB541-6NH	2,125.00
Z541-6NL	1,501.00

**Regularly furnished unless otherwise specified.*

Items designated as Best Sellers are most specified and are generally in stock for shipment.

◷ This symbol denotes a product that is engineered to reduce installation and rework time.

For additional product information, please visit www.zurn.com

Z545 16″ DIAMETER HEAVY-DUTY DRAIN

ENGINEERING SPECIFICATION

Zurn Z545 16″ diameter top drain features Dura-Coated cast iron body with bottom outlet, seepage pan, and combination membrane flashing clamp and frame for heavy-duty cast iron, slotted grate.

NOTES

†Add 3/16″ to 3-1/2″ dimension for ZB and ZN

A Pipe Size inch [mm]	Grate Open Area sq in [cm²]	Approximate Weight lb [kg]
2 [51], 3 [76], 4 [102], 6 [152]	45 [290]	69 [31]
8 [203]		71 [32]

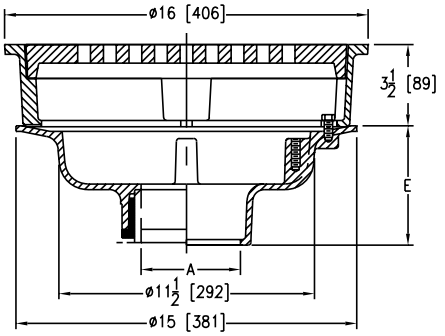

PREFIXES	DESCRIPTION	PIPE SIZE	LIST PRICE
Z545*	D.C.C.I. Body and Top	2″, 3″, 4″, 6″, 8″	2,390.00
ZB545	D.C.C.I. Body with Polished Bronze Top	2″, 3″, 4″, 6″, 8″	4,732.00
ZN545	D.C.C.I. Body with Polished Nickel Bronze Top	2″, 3″, 4″, 6″, 8″	5,037.00

OUTLETS (SPECIFY PIPE SIZE IN INCHES AND TYPE OF OUTLET)

OUTLET	TYPE	PIPE SIZE/OUTLET TYPE	E BODY HT. DIM.	ADD
IC	Inside Caulk	3IC, 4IC	5-1/4″	N/C
IG	Inside Gasket	3IG, 4IG	5-1/4″	N/C
IP	Threaded	2IP, 3IP, 4IP, 6IP, 8IP	3-3/4″	80.00
NH	No-Hub	2NH, 3NH, 4NH, 6NH, 8NH	5-1/4″	N/C
NL	Neo-Loc	2NL, 3NL, 4NL	4-5/8″	N/C

SUFFIXES		ADD
–DG	Duresist Grate	655.00
–G	Galvanized Cast Iron	1,322.00
–P	Trap Primer Connection	150.00
◷ –TC	Neo-Loc Test Cap Gasket (2″, 3″, 4″ NL Bottom Outlet Only)	24.00
–VP	Vandal-Proof Secured Top	206.00

BEST SELLERS	LIST PRICE
Z545-3NH	2,390.00
Z545-4NL	2,390.00

For additional product information, please visit www.zurn.com

**Regularly furnished unless otherwise specified.*

Items designated as Best Sellers are most specified and are generally in stock for shipment.

◷ This symbol denotes a product that is engineered to reduce installation and rework time.

Z546 21-1/2″ DIAMETER EXTRA HEAVY-DUTY DRAIN

ENGINEERING SPECIFICATION

Zurn Z546 21-1/2″ diameter top drain features Dura-Coated cast iron body with bottom outlet, seepage pan, and combination membrane flashing clamp and frame with seepage holes, extra heavy-duty, cast iron, slotted grate with suspended sediment bucket.

A Pipe Size inch [mm]	Grate Open Area sq in [cm²]	Approximate Weight lb [kg]
8 [203]	110 [710]	163 [74]
10 [254]		
12 [305]		

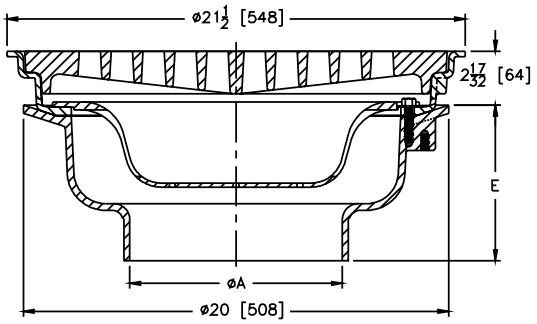

PREFIXES	DESCRIPTION	PIPE SIZE	LIST PRICE
Z546*	D.C.C.I. Body and Top	8″	2,510.00
		10″	2,604.00
		12″	2,728.00

OUTLETS (SPECIFY PIPE SIZE IN INCHES AND TYPE OF OUTLET)				
OUTLET	TYPE	PIPE SIZE/OUTLET TYPE	E BODY HT. DIM.	ADD
NH	No-Hub	8NH, 10NH, 12NH	7-5/16″	N/C
SUFFIXES				ADD
–F	Extension Frame - 1″-4″ (Specify Height)		D.C.	990.00
			Galv.	1,496.00
–G	Galvanized Cast Iron			1,322.00
–TS	Top Secured with Slotted Screws			211.00
–VP	Vandal-Proof Secured Top			235.00
BEST SELLER				LIST PRICE
Z546-12NH-F4				3,718.00

Z547 21″ DIAMETER EXTRA HEAVY-DUTY HEEL-PROOF PARKING DECK DRAIN WITH SUPPORT FLANGE

ENGINEERING SPECIFICATION

Zurn Z547 21″ diameter parking deck drain features Dura-Coated cast iron body with bottom outlet, combination membrane flashing clamp with support flange, and extra heavy-duty, heel-proof, slotted grate.

A Pipe Size inch [mm]	Grate Open Area sq in [cm²]	Approximate Weight lb [kg]
8 [203]	112 [723]	163 [74]
10 [254]		
12 [305]		

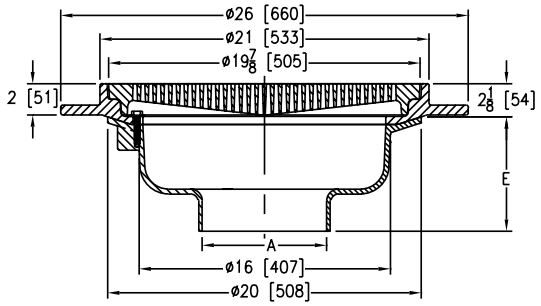

PREFIXES	DESCRIPTION	PIPE SIZE	LIST PRICE
Z547*	D.C.C.I. Body and Flange (with Duresist Grate)	8″	3,009.00
		10″	3,124.00
		12″	3,272.00

OUTLETS (SPECIFY PIPE SIZE IN INCHES AND TYPE OF OUTLET)				
OUTLET	TYPE	PIPE SIZE/OUTLET TYPE	E BODY HT. DIM.	ADD
NH	No-Hub	8NH, 10NH, 12NH	7-5/16″	N/C
SUFFIXES				ADD
–G	Galvanized Cast Iron			1,268.00
–TS	Top Secured with Slotted Screws			201.00
–VP	Vandal-Proof Secured top			228.00
BEST SELLER				LIST PRICE
Z547-8NH				3,009.00

**Regularly furnished unless otherwise specified.*

Items designated as Best Sellers are most specified and are generally in stock for shipment.

This symbol denotes a product that is engineered to reduce installation and rework time.

For additional product information, please visit www.zurn.com

Z550 9″ DIAMETER MEDIUM-DUTY DRAIN

ENGINEERING SPECIFICATION

Zurn Z550 9″ diameter top drain features Dura-Coated cast iron body with bottom outlet, seepage pan, and combination membrane flashing clamp and frame for medium-duty cast iron, heel-proof, slotted grate.

NOTES

†Add 3/16″ to 2″ dimension and 3/4″ to 9″ dimension for ZB and ZN

A Pipe Size inch [mm]	Grate Open Area sq in [cm²]	Approximate Weight lb [kg]
2 [51], 3 [76], 4 [102]	18 [116]	28 [13]
6 [152]		30 [14]

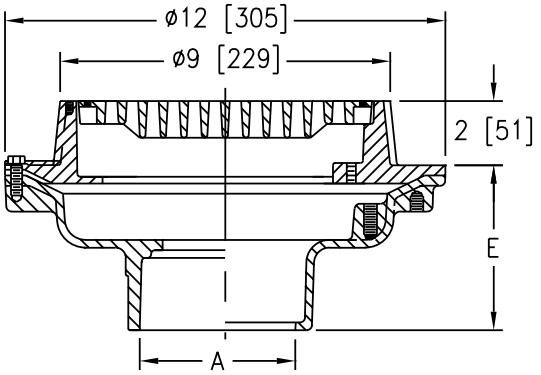

PREFIXES	DESCRIPTION	PIPE SIZE	LIST PRICE
Z550*	D.C.C.I. Body and Top	2″, 3″, 4″	509.00
		6″	646.00
ZB550	D.C.C.I. Body with Polished Bronze Top	2″, 3″, 4″	944.00
		6″	1,085.00
ZN550	D.C.C.I. Body with Polished Nickel Bronze Top	2″, 3″, 4″	1,045.00
		6″	1,180.00

OUTLETS (SPECIFY PIPE SIZE IN INCHES AND TYPE OF OUTLET)

OUTLET	TYPE	PIPE SIZE/OUTLET TYPE	E BODY HT. DIM.	ADD
IC	Inside Caulk	3IC, 4IC	3-3/4″	N/C
IG	Inside Gasket	3IG, 4IG	3-3/4″	N/C
IP	Threaded	3IP, 4IP	2-3/4″	80.00
NH	No-Hub	2NH, 3NH, 4NH	4-3/4″	N/C
		6NH	5-1/4″	N/C
NL	Neo-Loc	2NL, 3NL, 4NL	3-1/2″	N/C

SUFFIXES			ADD
–AR	Acid Resisting Epoxy Coated Cast Iron		501.00
–D	Dome Grate	Z	84.00
		ZB	290.00
		ZN	368.00
–DG	Duresist Grate		194.00
–G	Galvanized Cast Iron		428.00
–P	Trap Primer Connection		150.00
–S	Secondary Strainer		47.00
–SS	Stainless Mesh Liner for Bucket		290.00
◷ –TC	Neo-Loc Test Cap Gasket (2″, 3″, 4″ NL Bottom Outlet Only)		24.00
–TG	Tractor Grate		140.00
–TS	Top Secured with Slotted Screws		129.00
–TSP	Trap Seal Protection Device (Size Matches Drain Outlet Selected, See Z1072)		POA
–VP	Vandal-Proof Secured Top		149.00
–Y	Sediment Bucket		140.00
–90	90° Threaded Side Outlet Body Assembly (3″, 4″)		339.00

BEST SELLERS	LIST PRICE
Z550-3NH	509.00
Z550-3NH-Y	649.00
Z550-3NL	509.00
Z550-3NL-P	659.00
Z550-3NL-P-Y	799.00
Z550-3NL-Y	649.00
Z550-4NH	509.00
Z550-4NH-P	659.00
Z550-4NH-P-Y	799.00
Z550-4NH-Y	649.00
Z550-4NL	509.00
Z550-4NL-P	659.00
Z550-4NL-Y	649.00

For additional product information, please visit www.zurn.com

**Regularly furnished unless otherwise specified.*

Items designated as Best Sellers are most specified and are generally in stock for shipment.

◷ This symbol denotes a product that is engineered to reduce installation and rework time.

Z551 9″ DIAMETER MEDIUM-DUTY DRAIN

ENGINEERING SPECIFICATION

Zurn Z551 9″ diameter top drain features Dura-Coated cast iron body with bottom outlet and medium-duty, slotted grate.

NOTES

†Add 3/16″ to 'E' dimension and 3/4″ to 9″ dimension for ZN

A Pipe Size inch [mm]	Grate Open Area sq in [cm²]	Approximate Weight lb [kg]
2 [51], 3 [76], 4 [102]	18 [116]	19 [9]

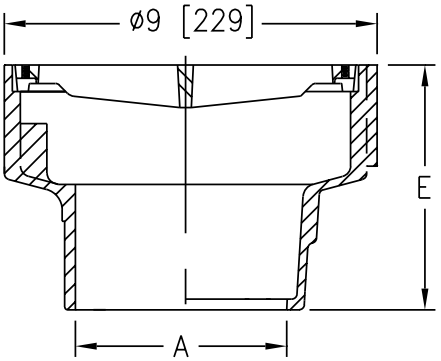

PREFIXES	DESCRIPTION	PIPE SIZE	LIST PRICE
Z551*	D.C.C.I. Body and Top	2″, 3″, 4″	326.00
ZN551	D.C.C.I. Body with Polished Nickel Bronze Top	2″, 3″, 4″	910.00

OUTLETS (SPECIFY PIPE SIZE IN INCHES AND TYPE OF OUTLET)

OUTLET	TYPE	PIPE SIZE/OUTLET TYPE	E BODY HT. DIM.	ADD
IP	Threaded	4IP	4″	80.00
NH	No-Hub	2NH, 3NH, 4NH	5-3/4″	N/C
NL	Neo-Loc	2NL, 3NL, 4NL	5-1/8″	N/C

SUFFIXES			ADD
–D	Dome Grate	Z	84.00
		ZN	368.00
–DG	Duresist Grate		194.00
–G	Galvanized Cast Iron		248.00
–P	Trap Primer Connection		150.00
–SS	Stainless Mesh Liner for Bucket		290.00
◷ –TC	Neo-Loc Test Cap Gasket (2″, 3″, 4″ NL Bottom Outlet Only)		24.00
–TG	Tractor Grate		140.00
–TS	Top Secured with Slotted Screws		129.00
–VP	Vandal-Proof Secured Top		149.00
–Y	Sediment Bucket		140.00

BEST SELLERS	LIST PRICE
Z551-4NH	326.00
Z551-4NL	326.00

**Regularly furnished unless otherwise specified.*

Items designated as Best Sellers are most specified and are generally in stock for shipment.

◷ This symbol denotes a product that is engineered to reduce installation and rework time.

For additional product information, please visit www.zurn.com

Z554 9″ MEDIUM-DUTY DRAIN WITH SUR-SET BUCKET

ENGINEERING SPECIFICATION

Zurn Z554 9″ diameter top drain features Dura-Coated cast iron body with bottom outlet, seepage pan, combination membrane flashing clamp and frame, and medium-duty cast iron grate with Sur-Set bucket.

NOTES

†Add 3/16″ to 2″ dimension and 3/4″ to 9″ for ZB and ZN

A Pipe Size inch [mm]	Grate Open Area sq in [cm²]	Approximate Weight lb [kg]
2 [51], 3 [76], 4 [102]	9 [58]	21 [10]

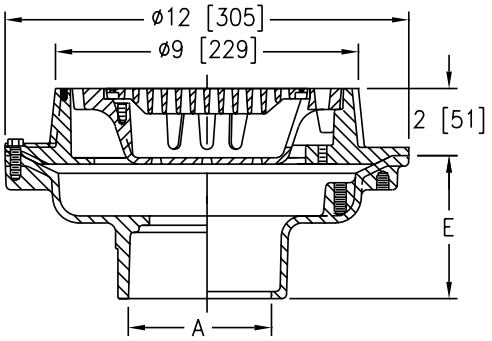

PREFIXES	DESCRIPTION	PIPE SIZE	LIST PRICE
Z554*	D.C.C.I. Body and Top	2″, 3″, 4″	597.00
ZB554	D.C.C.I. Body with Polished Bronze Top	2″, 3″, 4″	1,008.00
ZN554	D.C.C.I. Body with Polished Nickel Bronze Top	2″, 3″, 4″	1,098.00

OUTLETS (SPECIFY PIPE SIZE IN INCHES AND TYPE OF OUTLET)

OUTLET	TYPE	PIPE SIZE/ OUTLET TYPE	E BODY HT. DIM.	ADD
IP	Threaded	4IP	2-3/4″	80.00
NH	No-Hub	2NH, 3NH, 4NH	4-3/4″	N/C
NL	Neo-Loc	2NL, 3NL, 4NL	3-1/2″	N/C

SUFFIXES		ADD
–AR	Acid Resisting Epoxy Coated Cast Iron	536.00
–G	Galvanized Cast Iron	469.00
–P	Trap Primer Connection	150.00
–TC	Neo-Loc Test Cap Gasket (2″, 3″, 4″ NL Bottom Outlet Only)	24.00
–TS	Top Secured with Slotted Screws	129.00
–VP	Vandal-Proof Secured Top	149.00

BEST SELLER	LIST PRICE
Z554-4NH	597.00

Z556 8″ ADJUSTABLE HEAVY-DUTY DRAIN

ENGINEERING SPECIFICATION

Zurn Z556 8″ diameter top drain features Dura-Coated cast iron body with bottom outlet, seepage pan, and combination membrane flashing clamp and frame for adjustable extension with heavy-duty, slotted, cast iron grate.

NOTES

†Add 3/16″ to 2-3/8″ through 3-1/8″ dimension for ZB and ZN

A Pipe Size inch [mm]	Grate Open Area sq in [cm²]	Approximate Weight lb [kg]
2 [51], 3 [76], 4 [102]	11 [71]	19 [9]

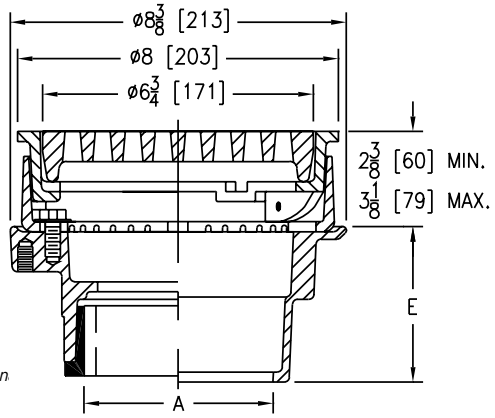

PREFIXES	DESCRIPTION	PIPE SIZE	LIST PRICE
Z556*	D.C.C.I. Body and Top	2″, 3″, 4″	412.00
ZN556	D.C.C.I. Body with Polished Nickel Bronze Top	2″, 3″, 4″	910.00

OUTLETS (SPECIFY PIPE SIZE IN INCHES AND TYPE OF OUTLET)

OUTLET	TYPE	PIPE SIZE/OUTLET TYPE	E BODY HT. DIM.	ADD
IP	Threaded	2IP, 3IP, 4IP	2-5/8″	80.00
NH	No-Hub	2NH, 3NH, 4NH	3-7/8″	N/C
NL	Neo-Loc	2NL, 3NL, 4NL	3-3/4″	N/C

SUFFIXES		ADD
–G	Galvanized Cast Iron	428.00
–P	Trap Primer Connection	150.00
–TS	Top Secured with Slotted Screws	129.00
–VP	Vandal-Proof Secured Top	149.00
–Y	Sediment Bucket	140.00

BEST SELLER	LIST PRICE
ZN556-4NL-Y	1,050.00

SEE LEGACY ADDENDUM ON PAGE 369 FOR MORE INFORMATION

For addition

**Regularly furnished unless otherwise specified.*

Items designated as Best Sellers are most specified and are generally in stock for shipment.

This symbol denotes a product that is engineered to reduce installation and rework time.

Z566 12″ SQUARE OPEN TOP DRAIN

ENGINEERING SPECIFICATION

Zurn Z566 12″ square open top drain features Dura-Coated cast iron body with bottom outlet and loose set cast iron secondary strainer.

NOTES

†Add 3/16 ″ to 'E' dimension for ZN

A Pipe Size inch [mm]	Approximate Weight lb [kg]
2 [51], 3 [76], 4 [102]	42 [19]

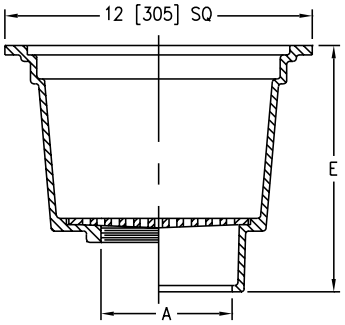

PREFIXES	DESCRIPTION	PIPE SIZE		LIST PRICE
Z566*	D.C.C.I. Body and Top	2″, 3″, 4″		798.00
ZN566	D.C.C.I. Body with Polished Nickel Bronze Top	2″, 3″, 4″		1,558.00
OUTLETS (SPECIFY PIPE SIZE IN INCHES AND TYPE OF OUTLET)				
OUTLET	**TYPE**	**PIPE SIZE/OUTLET TYPE**	**E BODY HT. DIM.**	**ADD**
IP	Threaded	3IP, 4IP	7-5/8″	80.00
NL	Neo-Loc	2NL, 3NL, 4NL	9″	N/C
SUFFIXES				**ADD**
–AR	Acid Resisting Epoxy Coated Cast Iron			744.00
–G	Galvanized Cast Iron			569.00
–GT	Top Grate		Z	194.00
			ZN	582.00
⏲ –TC	Neo-Loc Test Cap Gasket (2″, 3″, 4″ NL Bottom Outlet Only)			24.00
–Y	Sediment Bucket			242.00
BEST SELLERS				**LIST PRICE**
Z566-4NL-GT-Y				1,234.00
ZN566-4NL-GT-Y				2,382.00

Z575 6″ X 12″ MEDIUM-DUTY GUTTER DRAIN

ENGINEERING SPECIFICATION

Zurn Z575 6″ x 12″ top gutter drain features Dura-Coated cast iron body with bottom outlet and medium-duty, cast iron, anti-tilt, slotted grate.

NOTES

†Add 3/16″ to 'E' dimension for ZB and ZN

A Pipe Size inch [mm]	Grate Open Area sq in [cm²]	Approximate Weight lb [kg]
2 [51], 3 [76], 4 [102]	24 [155]	18 [8]

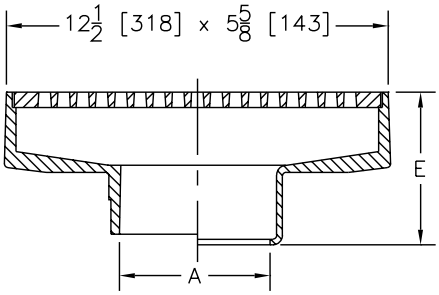

PREFIXES	DESCRIPTION	PIPE SIZE		LIST PRICE
Z575*	D.C.C.I. Body and Top	2″, 3″, 4″		488.00
ZB575	D.C.C.I. Body with Polished Bronze Top	2″, 3″, 4″		1,020.00
ZN575	D.C.C.I. Body with Polished Nickel Bronze Top	2″, 3″, 4″		1,088.00
OUTLETS (SPECIFY PIPE SIZE IN INCHES AND TYPE OF OUTLET)				
OUTLET	**TYPE**	**PIPE SIZE/OUTLET TYPE**	**E BODY HT. DIM.**	**ADD**
IC	Inside Caulk	2IC, 3IC, 4IC	5″	N/C
IG	Inside Gasket	2IG, 3IG, 4IG	5″	N/C
IP	Threaded	2IP, 3IP, 4IP	3-5/8″	80.00
NH	No-Hub (IP w/Z1040)	2NH, 3NH, 4NH	-	N/C
NL	Neo-Loc	2NL, 3NL, 4NL	4-1/2″	N/C
SUFFIXES				**ADD**
–DG	Duresist Grate			306.00
–G	Galvanized Cast Iron			494.00
–K	Seepage Pan			206.00
–KC	Seepage Pan with Clamp Collar			380.00
⏲ –TC	Neo-Loc Test Cap Gasket (2″, 3″, 4″ NL Bottom Outlet Only)			24.00
–TS	Top Secured with Slotted Screws			129.00
–V	Backwater Valve (See Z1099)			–
–VP	Vandal-Proof Secured Top			149.00
SEE LEGACY ADDENDUM ON PAGE 369 FOR MORE INFORMATION				

**Regularly furnished unless otherwise specified.*

Items designated as Best Sellers are most specified and are generally in stock for shipment.

⏲ This symbol denotes a product that is engineered to reduce installation and rework time.

For additional product information, please visit www.zurn.com

Z587 12-1/4" X 9-1/2" MEDIUM-DUTY DRAIN

ENGINEERING SPECIFICATION

Zurn Z587 12-1/4" x 9-1/2" top drain features Dura-Coated cast iron body with bottom outlet and medium-duty, cast iron, slotted grate.

A Pipe Size inch [mm]	Grate Open Area sq in [cm²]	Approximate Weight lb [kg]
2 [51], 3 [76], 4 [102]	24 [155]	31 [14]

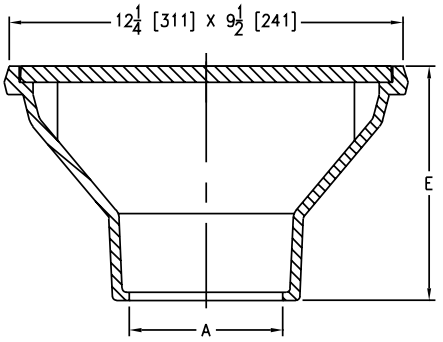

PREFIXES	DESCRIPTION	PIPE SIZE		LIST PRICE
Z587*	D.C.C.I. Body and Top	2", 3", 4"		1,448.00
OUTLETS (SPECIFY PIPE SIZE IN INCHES AND TYPE OF OUTLET)				
OUTLET	**TYPE**	**PIPE SIZE/OUTLET TYPE**	**E BODY HT. DIM.**	**ADD**
NH	No-Hub	2NH, 3NH, 4NH	7-3/16"	N/C
SUFFIXES				**ADD**
–G	Galvanized Cast Iron			531.00
–TS	Top Secured with Slotted Screws			138.00
–VP	Vandal-Proof Secured Top			159.00

Z609 9" SQUARE HEAVY-DUTY DRAIN

ENGINEERING SPECIFICATION

Zurn Z609 9" square top drain features Dura-Coated cast iron body with bottom outlet, seepage pan, heavy-duty, cast iron, anti-tilt, slotted grate, and combination membrane flashing clamp and frame.

NOTES

†Add 3/16" to 2-7/16" dimension and 3/4" to 9" dimension for ZB and ZN

A Pipe Size inch [mm]	Grate Open Area sq in [cm²]	Approximate Weight lb [kg]
2 [51], 3 [76], 4 [102]	14 [90]	32 [15]

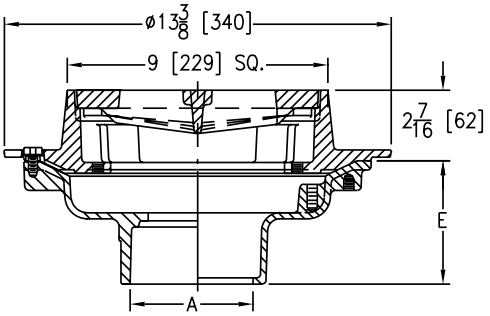

PREFIXES	DESCRIPTION	PIPE SIZE		LIST PRICE
Z609*	D.C.C.I. Body and Top	2", 3", 4"		824.00
ZB609	D.C.C.I. Body with Polished Bronze Top	2", 3", 4"		1,276.00
ZN609	D.C.C.I. Body with Polished Nickel Bronze Top	2", 3", 4"		1,434.00
OUTLETS (SPECIFY PIPE SIZE IN INCHES AND TYPE OF OUTLET)				
OUTLET	**TYPE**	**PIPE SIZE/OUTLET TYPE**	**E BODY HT. DIM.**	**ADD**
IC	Inside Caulk	2IC, 3IC, 4IC	3-3/4"	N/C
IG	Inside Gasket	2IG, 3IG, 4IG	3-3/4"	N/C
IP	Threaded	2IP, 3IP, 4IP	2-3/4"	80.00
NH	No-Hub (IP w/Z1040)	2NH, 3NH, 4NH	4-3/4"	N/C
NL	Neo-Loc	2NL, 3NL, 4NL	3-1/2"	N/C
SUFFIXES				**ADD**
–AR	Acid Resisting Epoxy Coated Cast Iron			501.00
–DG	Duresist Grate			211.00
–F	2" High Extension (Per Inch)			48.00
–G	Galvanized Cast Iron			420.00
–GG	Galvanized Grate			158.00
–H	Hinged Grate			178.00
–HL	Hinged Locking Grate			413.00
–P	Trap Primer Connection (1/2"*)			150.00
–S	Secondary Strainer			47.00
–SC	Solid Cover			483.00
–SS	Stainless Steel Mesh Liner for Bucket			286.00
◷ –TC	Neo-Loc Test Cap Gasket (2", 3", 4" NL Bottom Outlet Only)			24.00
–TS	Top Secured with Slotted Screws			129.00
–V	Backwater Valve (See Z1099)			–
–VP	Vandal-Proof Secured Top			149.00
–Y	Sediment Bucket			140.00
–90	90° Threaded Side Outlet Body Assembly (2" thru 4" Only)			339.00

SEE LEGACY ADDENDUM ON PAGE 369 FOR MORE INFORMATION

**Regularly furnished unless otherwise specified.*

Items designated as Best Sellers are most specified and are generally in stock for shipment.

◷ This symbol denotes a product that is engineered to reduce installation and rework time.

Z610 12-1/2″ HEAVY-DUTY DRAIN

ENGINEERING SPECIFICATION

Zurn Z610 12-1/2″ square top drain features Dura-Coated cast iron body with bottom outlet, seepage pan, and combination membrane flashing clamp and frame for heavy-duty, cast iron, loose, slotted grate with suspended polypropylene sediment bucket.

NOTES

†Add 3/16″ to 2-1/2″ dimension and 3/4″ to 12-1/2″ dimension for ZB and ZN

A Pipe Size inch [mm]	Grate Open Area sq in [cm²]	Approximate Weight lb [kg]
2 [51], 3 [76], 4 [102], 6 [152]	42 [271]	54 [24]
8 [203]		56 [25]

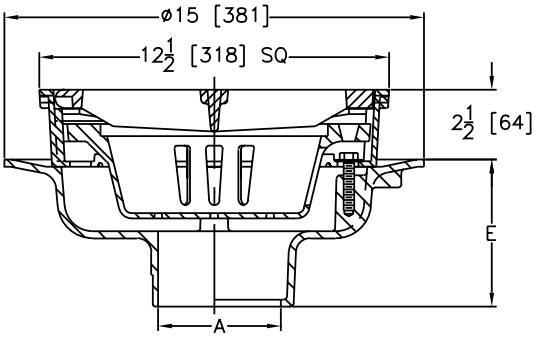

PREFIXES	DESCRIPTION	PIPE SIZE	LIST PRICE
Z610*	D.C.C.I. Body and Top	2″, 3″, 4″, 6″	1,489.00
		8″	1,790.00
ZB610	D.C.C.I. Body with Polished Bronze Top	2″, 3″, 4″, 6″	2,390.00
		8″	2,693.00
ZN610	D.C.C.I. Body with Polished Nickel Bronze Top	2″, 3″, 4″, 6″	2,583.00
		8″	2,875.00

OUTLETS (SPECIFY PIPE SIZE IN INCHES AND TYPE OF OUTLET)

OUTLET	TYPE	PIPE SIZE/OUTLET TYPE	E BODY HT. DIM.	ADD
IC	Inside Caulk	3IC, 4IC, 6IC	5-1/4″	N/C
IG	Inside Gasket	3IG, 4IG, 6IG	5-1/4″	N/C
IP	Threaded	2IP, 3IP, 4IP, 6IP	3-3/4″	80.00
NH	No-Hub (IP w/ Z1040)	2NH, 3NH, 4NH, 6NH, 8NH	5-1/4″	N/C
NL	Neo-Loc	2NL, 3NL, 4NL	4-5/8″	N/C

SUFFIXES			ADD
–AR	Acid Resisting Epoxy Coated Cast Iron		917.00
–DG	Duresist Grate		368.00
–DS	Ductile Iron Solid Cover		757.00
–DX	Dex-O-Tex Flange (ZB, ZN only)	ZB	977.00
		ZN	1,179.00
–F	2″ High Extension		328.00
–G	Galvanized Cast Iron		889.00
–H	Hinged Grate		242.00
–HC	Hinged Solid Cover		532.00
–HL	Hinged Locking Grate		552.00
–HLC	Hinged Locking Cover		577.00
–P	Trap Primer Connection		150.00
–S	Secondary Strainer		98.00
◷ –SA	Stabilizer Assembly (See Z1036)		148.00
–SC	Solid Cover		483.00
–SS	Stainless Mesh Liner for Bucket		417.00
◷ –TC	Neo-Loc Test Cap Gasket (2″, 3″, 4″ NL Bottom Outlet Only)		24.00
–TS	Top Secured with Slotted Screws		129.00
–TSP	Trap Seal Protection Device (Size Matches Drain Outlet Selected, See Z1072)		POA
–V	Backwater Valve (See Z1099)		–
–VP	Vandal-Proof Secured Top		149.00
–YA	Aluminum Sediment Bucket		380.00
–YC	Cast Iron Sediment Bucket		273.00
–90	90° Threaded Side Outlet Body Assembly		365.00
			DEDUCT
–LY	Less Sediment Bucket		-325.00

BEST SELLERS	LIST PRICE
Z610-3NL	1,489.00
Z610-4NH	1,489.00
Z610-4NH-DG	1,857.00
Z610-4NH-HL	2,041.00
Z610-4NH-S	1,587.00
Z610-4NL	1,489.00
Z610-4NL-HC	2,021.00
Z610-4NL-P	1,639.00
Z610-4NL-S	1,587.00
ZN610-4NL	2,583.00
Z610-6NH	1,489.00
Z610-6NL	1,489.00
Z610-8NH	1,790.00

**Regularly furnished unless otherwise specified.*

Items designated as Best Sellers are most specified and are generally in stock for shipment.

◷ This symbol denotes a product that is engineered to reduce installation and rework time.

For additional product information, please visit www.zurn.com

Z611 9″ MEDIUM-DUTY DRAIN

ENGINEERING SPECIFICATION

Zurn Z611 9″ square top drain features Dura-Coated cast iron body with bottom outlet, seepage pan, and combination membrane flashing clamp and frame for cast iron, medium-duty, slotted grate with suspended sediment bucket.

NOTES

†Add 3/16″ to 2″ and 9″ dimension for ZB and ZN

A Pipe Size inch [mm]	Grate Open Area sq in [cm²]	Approximate Weight lb [kg]
2 [51], 3 [76], 4 [102]	26 [168]	29 [13]

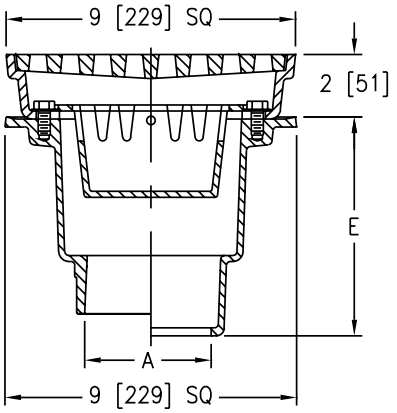

PREFIXES	DESCRIPTION	PIPE SIZE	LIST PRICE
Z611*	D.C.C.I. Body and Top	2″, 3″, 4″	960.00
ZB611	D.C.C.I. Body with Polished Bronze Top	2″, 3″, 4″	1,413.00
ZN611	D.C.C.I. Body with Polished Nickel Bronze Top	2″, 3″, 4″	1,579.00

OUTLETS (SPECIFY PIPE SIZE IN INCHES AND TYPE OF OUTLET)				
OUTLET	TYPE	PIPE SIZE/OUTLET TYPE	E BODY HT. DIM.	ADD
IP	Threaded	2IP, 3IP, 4IP	5″	80.00
NH	No-Hub (IP w/Z1040)	2NH, 3NH, 4NH	7-1/2″	N/C
NL	Neo-Loc	2NL, 3NL, 4NL	6-1/8″	N/C

SUFFIXES		ADD
–AR	Acid Resisting Epoxy Coated Cast Iron	556.00
–DG	Duresist Grate	245.00
–G	Galvanized Cast Iron	428.00
–P	Trap Primer Connection	150.00
–S	Secondary Strainer	48.00
◷ –TC	Neo-Loc Test Cap Gasket (2″, 3″, 4″ NL Bottom Outlet Only)	24.00
–V	Backwater Valve (See Z1099)	–
–VP	Vandal-Proof Secured Top	149.00
–90	90° Side Outlet Body Assembly (2″, 3″ Threaded Only)	158.00
		DEDUCT
–LY	Less Sediment Bucket	-80.00

BEST SELLERS	LIST PRICE
Z611-4NH	960.00
Z611-4NL	960.00

For additional product information, please visit www.zurn.com

**Regularly furnished unless otherwise specified.*

Items designated as Best Sellers are most specified and are generally in stock for shipment.

◷ This symbol denotes a product that is engineered to reduce installation and rework time.

Z624 ISOLATION DECK DRAIN

ENGINEERING SPECIFICATION

Zurn Z624 floating slab drain features Dura-Coated cast iron upper and lower bodies, clamp collar with weep holes, neoprene flex gasket, isolation nipple, and slotted grate.

NOTES

†Add 3/16″ to 4-15/16″ dimension for ZN

A Pipe Size inch [mm]	Grate Open Area sq in [cm²]	Approximate Weight lb [kg]
2 [51], 3 [76], 4 [102]	18 [116]	42 [19]
6 [152]		

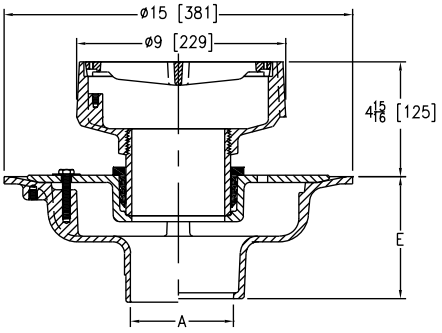

PREFIXES	DESCRIPTION	PIPE SIZE	LIST PRICE
Z624*	D.C.C.I. Body and Top	2″, 3″, 4″	1,686.00
		6″	1,989.00
ZN624	D.C.C.I. Body with Polished Nickel Bronze Top	2″, 3″, 4″	2,023.00
		6″	2,324.00

OUTLETS (SPECIFY PIPE SIZE IN INCHES AND TYPE OF OUTLET)				
OUTLET TYPE		PIPE SIZE/OUTLET TYPE	E BODY HT. DIM.	ADD
NH	No-Hub	2NH, 3NH, 4NH, 6NH	5-1/4″	N/C
NL	Neo-Loc	2NL, 3NL, 4NL	4-5/8″	N/C

SUFFIXES		ADD
–C	Underdeck Clamp (Lower Body)	244.00
–G	Galvanized Cast Iron	1,199.00
–R	Sump Receiver (Lower Body)	272.00
–TS	Top Secured with Slotted Screws	129.00
–VP	Vandal-Proof Secured Top	149.00
–Y	Sediment Bucket (Upper Body)	147.00

BEST SELLERS	LIST PRICE
Z624-3NH	1,686.00
ZN624-3NH	2,023.00
ZN624-4NH	2,023.00
Z624-6NH	1,989.00

Z625 ADJUSTABLE ISOLATION DECK DRAIN

ENGINEERING SPECIFICATION

Zurn ZN625 adjustable isolation deck drain features Dura-Coated cast iron upper and lower bodies, upper and lower clamp collars, neoprene flex gasket, isolation nipple, and adjustable 6″ diameter nickel bronze strainer.

A Pipe Size inch [mm]	Grate Open Area sq in [cm²]	Approximate Weight lb [kg]
2 [51], 3 [76], 4 [102]	9 [58]	42 [19]
6 [152]		

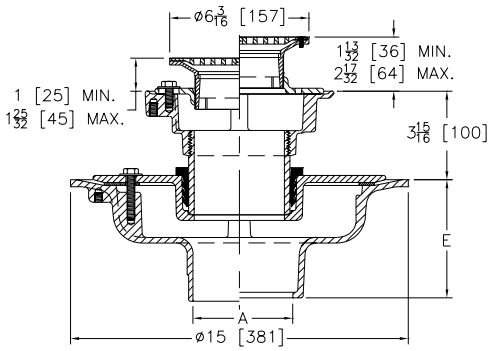

PREFIXES	DESCRIPTION	PIPE SIZE	LIST PRICE
ZN625*	D.C.C.I. Body with Polished Nickel Bronze Top	2″, 3″, 4″	1,432.00
		6″	1,734.00
ZB625	D.C.C.I. Body with Polished Bronze Top	2″, 3″, 4″	1,378.00
		6″	1,680.00

OUTLETS (SPECIFY PIPE SIZE IN INCHES AND TYPE OF OUTLET)				
OUTLET TYPE		PIPE SIZE/OUTLET TYPE	E BODY HT. DIM.	ADD
NH	No-Hub	2NH, 3NH, 4NH, 6NH	5-1/4″	N/C
NL	Neo-Loc	2NL, 3NL, 4NL	4-5/8″	N/C

SUFFIXES		ADD
–C	Underdeck Clamp (Lower Body)	244.00
–G	Galvanized Cast Iron	1,143.00
Ⓛ –PC	Protective Cover	64.00
–R	Sump Receiver (Lower Body)	272.00
–U	3″ High Extension Adapter (Upper Body)	140.00
–VP	Vandal-Proof Secured Top	58.00
–Y	Sediment Bucket (Upper Body)	109.00

BEST SELLERS	LIST PRICE
ZN625-3NH	1,432.00
ZN625-4NH	1,432.00

**Regularly furnished unless otherwise specified.*

Items designated as Best Sellers are most specified and are generally in stock for shipment.

Ⓛ This symbol denotes a product that is engineered to reduce installation and rework time.

For additional product information, please visit www.zurn.com

Z627 HEAVY-DUTY ADJUSTABLE ISOLATION DECK DRAIN

ENGINEERING SPECIFICATION

Zurn Z627 adjustable isolation deck drain features Dura-Coated cast iron upper and lower bodies, clamp collar, neoprene flex gasket, isolation nipple, and 8″ diameter round, heavy-duty grate.

NOTES

†Add 3/16″ to 1-3/8″ through 3-5/8″ dimension and 3/4″ to 9″ dimension for ZN

A Pipe Size inch [mm]	Grate Open Area sq in [cm²]	Approximate Weight lb [kg]
2 [51], 3 [76], 4 [102]	18 [116]	65 [29]
6 [152]		

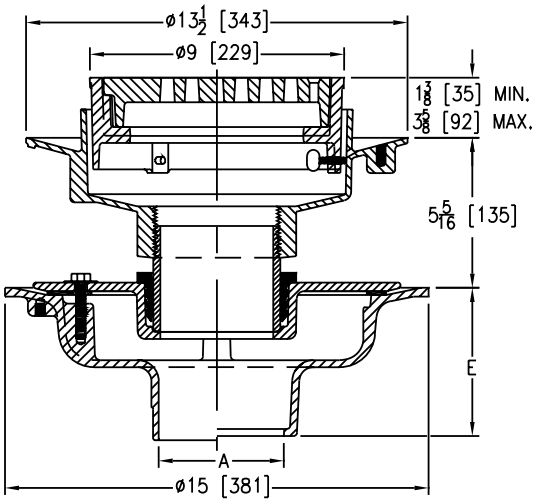

PREFIXES	DESCRIPTION	PIPE SIZE	LIST PRICE
Z627*	D.C.C.I. Body and Top	2″, 3″, 4″	1,318.00
		6″	1,620.00
ZN627	D.C.C.I. Body with Polished Nickel Bronze Top	2″, 3″, 4″	1,819.00
		6″	2,119.00

OUTLETS (SPECIFY PIPE SIZE IN INCHES AND TYPE OF OUTLET)

OUTLET	TYPE	PIPE SIZE/OUTLET TYPE	E BODY HT. DIM.	ADD
NH	No-Hub	2NH, 3NH, 4NH, 6NH	5-1/4″	N/C
NL	Neo-Loc	2NL, 3NL, 4NL	4-5/8″	N/C

SUFFIXES		ADD
–C	Underdeck Clamp (Lower Body)	244.00
–CC	Clamp Collar (Upper Body)	N/C
–DG	Duresist Grate	217.00
–G	Galvanized Cast Iron	1,378.00
–R	Sump Receiver (Lower Body)	272.00
–TS	Top Secured with Slotted Screws	129.00
–VP	Vandal-Proof Secured Top	149.00
–Y	Sediment Bucket	140.00

BEST SELLERS	LIST PRICE
Z627-3NH	1,318.00
Z627-3NH-VP	1,467.00
ZN627-3NH	1,819.00

Z629 VERTICAL WALL DRAIN WITH BACKWATER VALVE

ENGINEERING SPECIFICATION

Zurn Z629 vertical wall drain features Dura-Coated cast iron body, bronze valve assembly, and secured slotted grate.

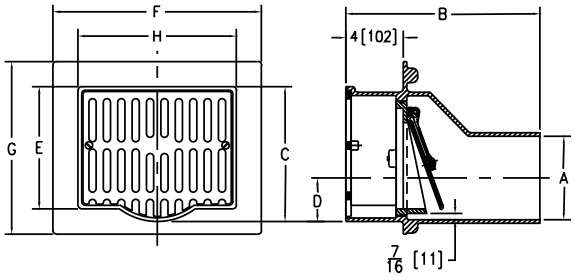

PREFIXES	DESCRIPTION	PIPE SIZE	LIST PRICE
Z629*	D.C.C.I. Body with Cast Iron Grate	3″, 4″	1,876.00
		6″	2,823.00
ZN629	D.C.C.I. Body with Polished Nickel Bronze Grate	3″, 4″	2,761.00
		6″	3,705.00
OUTLETS (SPECIFY PIPE SIZE IN INCHES AND TYPE OF OUTLET)			
OUTLET TYPE		**PIPE SIZE/OUTLET TYPE**	**ADD**
NH	No-Hub	3NH, 4NH, 6NH	N/C
SUFFIXES			**ADD**
–C	Clamping Collar		267.00
–G	Galvanized Cast Iron		660.00
–VP	Vandal-Proof Secured Top		84.00
			DEDUCT
–LV	Less Backwater Valve	3″, 4″	-436.00
		6″	-1051.00

Dimensions in inches [mm]								Grate Open Area sq in [cm²]	Approximate Weight lb [kg]
A Pipe Size	B	C	D	E	F	G	H		
3 [76]	13 [330]	7-5/8 [178]	1-1/2 [38]	6-7/8 [175]	12-3/4 [324]	11 [279]	9-1/4 [235]	20 [129]	47 [21]
4 [102]			2 [51]						
6 [152]	13-1/2 [343]	9-3/8 [238]	3-1/8 [79]	8-1/2 [216]	14-1/2 [368]	12 [305]	11 [279]	33 [213]	58 [26]

**Regularly furnished unless otherwise specified.*

Items designated as Best Sellers are most specified and are generally in stock for shipment.

This symbol denotes a product that is engineered to reduce installation and rework time.

For additional product information, please visit www.zurn.com

Z645 12-1/2" X 12-1/2" HEAVY-DUTY DRAIN

ENGINEERING SPECIFICATION

Zurn Z645 12-1/2" x 12-1/2" top drain features Dura-Coated cast iron body with side outlet, internal trap with bronze cleanout plug, seepage pan, and combination membrane flashing clamp and frame for cast iron, hinged, heavy-duty, slotted grate with suspended aluminum sediment bucket.

NOTES

†Add 3/16" to 2-5/8" dimension and 3/4" to 12-1/2" dimension for ZB and ZN

Dimensions in inches [mm]		Grate Open Area sq in [cm²]	Approximate Weight lb [kg]
A Pipe Size	M		
3 [76]	3-1/2 [89]	44 [284]	112 [51]
4 [102]	3 [76]		

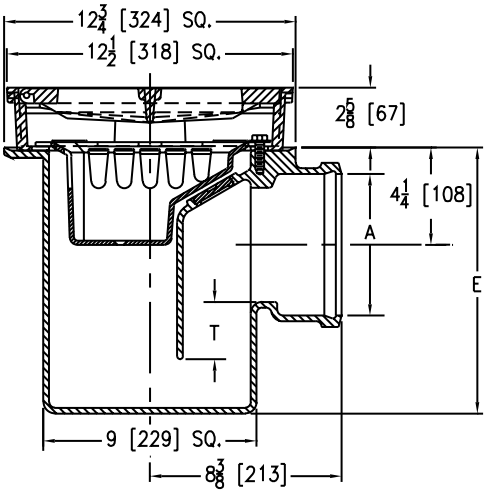

PREFIXES	DESCRIPTION	PIPE SIZE	LIST PRICE
Z645*	D.C.C.I. Body and Top	3", 4"	2,566.00
ZB645	D.C.C.I. Body with Polished Bronze Top	3", 4"	3,379.00
ZN645	D.C.C.I. Body with Polished Nickel Bronze Top	3", 4"	3,657.00

OUTLETS (SPECIFY PIPE SIZE IN INCHES AND TYPE OF OUTLET)				
OUTLET TYPE		PIPE SIZE/OUTLET TYPE	E BODY HT. DIM.	ADD
IC	Inside Caulk	3IC, 4IC	11-5/8"	N/C

SUFFIXES		ADD
–AR	Acid Resisting Epoxy Coated Cast Iron	1,660.00
–G	Galvanized Cast Iron	1,458.00
–P	Trap Primer Connection (Specify 1/2" or 3/4")	150.00
–VP	Vandal-Proof Secured Top	149.00

BEST SELLER	LIST PRICE
Z645-4IC	2,566.00

**Regularly furnished unless otherwise specified.*

Items designated as Best Sellers are most specified and are generally in stock for shipment.

This symbol denotes a product that is engineered to reduce installation and rework time.

Z662 16″ HEAVY-DUTY DRAIN

ENGINEERING SPECIFICATION

Zurn Z662 16″ square top drain features Dura-Coated cast iron body with bottom outlet, seepage pan, and combination membrane flashing clamp and frame for heavy-duty, slotted, loose grate with suspended sediment bucket.

NOTES

†Add 3/16″ to 3-3/8″ through 3-5/8″ dimension and 11/16″ to 16″ dimension for ZB and ZN

A Pipe Size inch [mm]	Grate Open Area sq in [cm²]	Approximate Weight lb [kg]
3 [76], 4 [102]	53 [342]	95 [43]
6 [152]		98 [44]

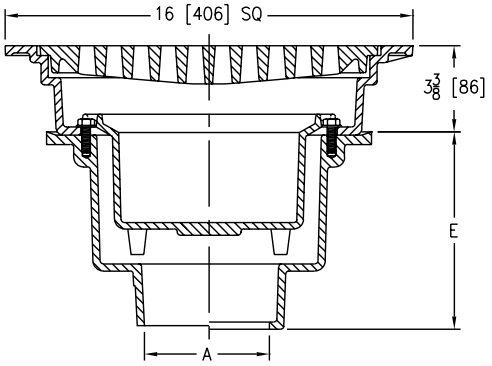

PREFIXES	DESCRIPTION	PIPE SIZE	LIST PRICE
Z662*	D.C.C.I. Body and Top	3″, 4″, 6″	2,669.00
ZB662	D.C.C.I. Body with Polished Bronze Top	3″, 4″, 6″	4,107.00
ZN662	D.C.C.I. Body with Polished Nickel Bronze Top	3″, 4″, 6″	4,482.00

OUTLETS (SPECIFY PIPE SIZE IN INCHES AND TYPE OF OUTLET)				
OUTLET	TYPE	PIPE SIZE/OUTLET TYPE	E BODY HT. DIM.	ADD
IC	Inside Caulk	4IC, 6IC	7-3/4″	N/C
IG	Inside Caulk w/ Sealtrol Gasket	4IG, 6IG	7-3/4″	N/C
IP	Threaded	4IP, 6IP	6-5/16″	80.00
NH	No-Hub	3NH, 4NH, 6NH	7-13/16″	N/C
NL	Neo-Loc	3NL, 4NL	7-3/16″	N/C

SUFFIXES		ADD
–DG	Duresist Grate	556.00
–G	Galvanized Cast Iron	1,379.00
–HP	Heel-Proof Grate	645.00
◷ –PK	Precast Kit	445.00
–SS	Stainless Steel Mesh Liner for Bucket	417.00
◷ –TC	Neo-Loc Test Cap Gasket (3″, 4″ Bottom Outlet Only)	24.00
–TS	Top Secured with Slotted Screws	129.00
–TSP	Trap Seal Protection Device (Size Matches Drain Outlet Selected, See Z1072)	POA
–VP	Vandal-Proof Secured Top	149.00
–YA	Aluminum Sediment Bucket	380.00
		DEDUCT
–LY	Less Sediment Bucket	-169.00

BEST SELLERS	LIST PRICE
Z662-3NH-DG-G-HP-VP-YA	5,778.00
Z662-3NH-HP-VP	3,463.00
Z662-3NL-HP-VP	3,463.00
Z662-4NH	2,669.00
Z662-4NH-DG	3,225.00
Z662-4NH-G	4,048.00
Z662-4NH-PK	3,114.00
Z662-4NH-PK-G	4,493.00
Z662-4NH-PK-G-VP	4,642.00
Z662-4NL	2,669.00
Z662-6IP-DG-VP	3,454.00
Z662-6NH	2,669.00
Z662-6NH-G	4,048.00
Z662-6NH-HP-VP	3,463.00

**Regularly furnished unless otherwise specified.*

Items designated as Best Sellers are most specified and are generally in stock for shipment.

◷ This symbol denotes a product that is engineered to reduce installation and rework time.

For additional product information, please visit www.zurn.com

Z662-HF 16″ HEAVY-DUTY DRAIN WITH HIGH FLOW DUCTILE IRON GRATE

ENGINEERING SPECIFICATION

Zurn Z662-HF 16″ square top drain features Dura-Coated cast iron body with bottom outlet, seepage pan, and combination membrane flashing clamp and frame for heavy-duty, high flow ductile iron grate with suspended sediment bucket.

NOTES

†Add 3/16″ to 3-3/8″ through 3-5/8″ dimension and 11/16″ to 16″ dimension for ZB and ZN

A Pipe Size inch [mm]	Grate Open Area sq in [cm²]	Approximate Weight lb [kg]
3 [76], 4 [102]	103 [665]	86 [39]
6 [152]		89 [40]

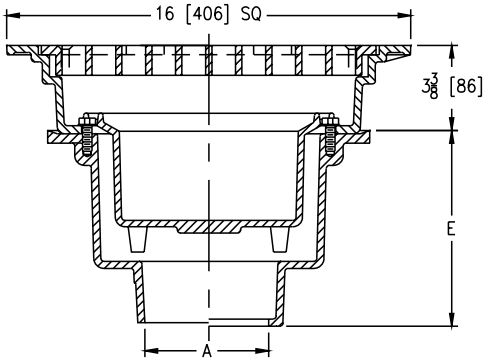

PREFIXES	DESCRIPTION	PIPE SIZE	LIST PRICE
Z662-HF*	D.C.C.I. Body and Top	3″, 4″, 6″	3,288.00
ZB662-HF	D.C.C.I. Body with Polished Bronze Top	3″, 4″, 6″	4,619.00
ZN662-HF	D.C.C.I. Body with Polished Nickel Bronze Top	3″, 4″, 6″	4,967.00

OUTLETS (SPECIFY PIPE SIZE IN INCHES AND TYPE OF OUTLET)				
OUTLET	TYPE	PIPE SIZE/OUTLET TYPE	E BODY HT. DIM.	ADD
IC	Inside Caulk	4IC, 6IC	7-3/4″	N/C
IG	Inside Caulk w/ Sealtrol Gasket	4IG, 6IG	7-3/4″	N/C
IP	Threaded	4IP, 6IP	6-5/16″	80.00
NH	No-Hub	3NH, 4NH, 6NH	7-13/16″	N/C
NL	Neo-Loc	3NL, 4NL	7-3/16″	N/C

SUFFIXES		ADD
–SS	Stainless Steel Mesh Liner for Bucket	417.00
⏲ –TC	Neo-Loc Test Cap Gasket (3″, 4″ Bottom Outlet Only)	22.00
–TS	Top Secured with Slotted Screws	129.00
–VP	Vandal-Proof Secured Top	149.00
–YA	Aluminum Sediment Bucket	380.00
		DEDUCT
–LY	Less Sediment Bucket	171.00

For additional product information, please visit www.zurn.com

**Regularly furnished unless otherwise specified.*

Items designated as Best Sellers are most specified and are generally in stock for shipment.

⏲ This symbol denotes a product that is engineered to reduce installation and rework time.

Z664 6″ WIDE HEAVY-DUTY MODULAR TRENCH DRAIN

ENGINEERING SPECIFICATION

Zurn Z664 6″ wide top modular trench drain features Dura-Coated cast iron drain section with bottom outlet and secondary dome strainer. Both 12″ long outlet module and extension modules are complete with integral seepage pan and loose heavy-duty, slotted, heel-proof grate.

NOTES

†Add 1/8 [203] to 'E' and 2″ dimension for ZB and ZN

A Pipe Size inch [mm]	Grate Open Area sq in [cm²]	Approximate Weight lb [kg]
2 [51], 3 [76], 4 [102]	14 [90]	35 [16]

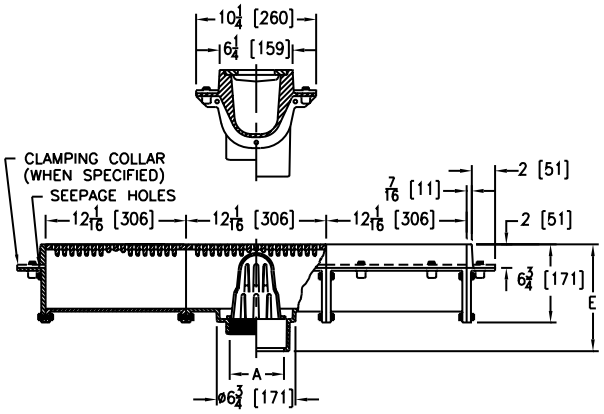

PREFIXES	DESCRIPTION	PIPE SIZE	LIST PRICE
Z664*	D.C.C.I. Body and Top	2″, 3″, 4″	1,033.00
ZB664	D.C.C.I. Body with Polished Bronze Top	2″, 3″, 4″	2,204.00
ZN664	D.C.C.I. Body with Polished Nickel Bronze Top	2″, 3″, 4″	2,327.00

OUTLETS (SPECIFY PIPE SIZE IN INCHES AND TYPE OF OUTLET)				
OUTLET	TYPE	PIPE SIZE/OUTLET TYPE	E BODY HT. DIM.	ADD
IC	Inside Caulk	2IC, 3IC, 4IC	9-1/8″	N/C
IP	Threaded	2IP, 3IP, 4IP	9-1/8″	80.00
NH	No-Hub (IP w/Z1040)	2NH, 3NH, 4NH	-	N/C
NL	Neo-Loc	2NL, 3NL, 4NL	8-3/8″	N/C

SUFFIXES			ADD
–AR	Acid Resisting Epoxy Coated Cast Iron (Per Section)		520.00
–C	Clamp Collar (Per Section)		158.00
–DG	Duresist Grate (Per Section)		325.00
–ES	12″ Extension Section (Specify Number of Sections Required)	Z	1,033.00
		ZB	2,204.00
		ZN	2,327.00
–G	Galvanized Cast Iron (Per Section)		323.00
–M	Side Outlet Adapter Via End Plate		290.00
–SQ	Square Hole Grate (Per Section) (Z Only)		767.00
–TS	Top Secured with Slotted Screws (Per Section)		181.00
–V	Backwater Valve (See Z1099) (Per Outlet)		–
–VP	Vandal-Proof Secured Top (Per Section)		242.00
–Y	Sediment Bucket (Per Outlet Section)		292.00

BEST SELLERS	LIST PRICE
Z664-4IP-ES(7)	8,344.00
Z664-4NH(8)-DG-ES(80)	91,229.00
Z664-4NH-ES(13)	14,462.00
Z664-4NL-ES(15)	16,528.00
Z664-4NL-ES(9)	10,330.00
Z664-ES	1,033.00

*Regularly furnished unless otherwise specified.

Items designated as Best Sellers are most specified and are generally in stock for shipment.

This symbol denotes a product that is engineered to reduce installation and rework time.

Z665 12″ WIDE HEAVY-DUTY MODULAR TRENCH DRAIN

ENGINEERING SPECIFICATION

Zurn Z665 12″ wide top modular trench drain features Dura-Coated cast iron deep sump body with bottom outlet. Both 12″ long outlet module and extension modules are complete with integral seepage pan and heavy-duty, loose, slotted grate.

NOTES

†Add 1/8″ to 'E' and 2″ dimension for ZB and ZN

A Pipe Size inch [mm]	Grate Open Area sq in [cm²]	Approximate Weight lb [kg]
2 [51], 3 [76], 4 [102]	35 [226]	100 [45]
5 [127], 6 [152]		110 [50]

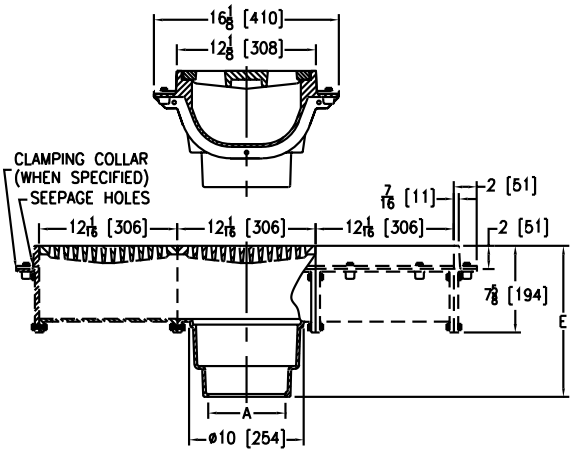

PREFIXES	DESCRIPTION	PIPE SIZE	LIST PRICE
Z665*	D.C.C.I. Body and Top	2″, 3″, 4″, 5″, 6″	1,949.00
ZB665	D.C.C.I. Body with Polished Bronze Top	2″, 3″, 4″, 5″, 6″	2,906.00
ZN665	D.C.C.I. Body with Polished Nickel Bronze Top	2″, 3″, 4″, 5″, 6″	3,051.00

OUTLETS (SPECIFY PIPE SIZE IN INCHES AND TYPE OF OUTLET)

OUTLET	TYPE	PIPE SIZE/OUTLET TYPE	E BODY HT. DIM.	ADD
IC	Inside Caulk	2IC, 3IC, 4IC, 5IC, 6IC	13-3/16″	N/C
IG	Inside Caulk w/ Sealtrol Gasket	2IG, 3IG, 4IG, 6IG	13-3/16″	N/C
NL	Neo-Loc	2NL, 3NL, 4NL	12-1/2″	N/C

SUFFIXES			ADD
–AR	Acid Resisting Epoxy Coated Cast Iron (Per Section)		764.00
–C	Clamp Collar (Per Section)		158.00
–DB	Bottom Dome Strainer (Per Outlet Section)		285.00
–DG	Duresist Grate (Per Section)		712.00
–ES	12″ Extension Section (Specify Number of Sections Required)	Z	1,949.00
		ZB	2,857.00
		ZN	3,051.00
–G	Galvanized Cast Iron (Per Section)		641.00
–HP	Heel-Proof Grate (Per Section) (ZB and ZN only)		645.00
–M	Side Outlet Adapter Via End Plate		382.00
–SB	Shallow Body (Bucket not available with this option.)		N/C
–SQ	Square Slotted Medium-Duty Grate (Per Section)		N/C
◷ –TC	Neo-Loc Test Cap Gasket (2″, 3″, 4″ NL Bottom Outlet Only)		24.00
–TS	Top Secured with Slotted Screws (Per Section)		181.00
–VP	Vandal-Proof Secured Top (Per Section)		242.00
–Y	Sediment Bucket (Per Outlet Section)		561.00

BEST SELLERS	LIST PRICE
Z665-3NL(3)-DB-DG-ES(12)	40,770.00
Z665-3NL-ES(23)	46,776.00
Z665-4NL	1,949.00
Z665-4NL-DB-DG-ES(8)	24,234.00
Z665-4NL-ES(18)	37,031.00
Z665-4NL-ES(19)	38,980.00
Z665-4NL-ES(23)	46,776.00
Z665-4NL-ES(31)	62,368.00
Z665-4NL-Y-ES(8)	18,102.00
Z665-6IG	1,949.00
Z665-6IG-ES(53)	105,246.00

For additional product information, please visit www.zurn.com

**Regularly furnished unless otherwise specified.*

Items designated as Best Sellers are most specified and are generally in stock for shipment.

◷ This symbol denotes a product that is engineered to reduce installation and rework time.

Z667 6″ WIDE MEDIUM-DUTY MODULAR TRENCH DRAIN

ENGINEERING SPECIFICATION

Zurn Z667 6″ wide top sectional trench drain features Dura-Coated cast iron bottom outlet section, vertically and horizontally adjustable in cast iron drain section, with seepage pan and membrane clamp. Both 15″ long outlet module section and extension modules are complete with loose, medium-duty, slotted grate.

NOTES

†Add 1/8″ to 'E' dimension for ZN

A Pipe Size inch [mm]	Grate Open Area sq in [cm²]	Approximate Weight lb [kg]
3 [76], 4 [102]	27 [174]	40 [18]

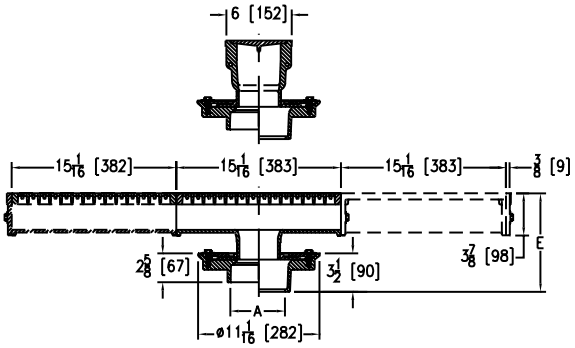

PREFIXES	DESCRIPTION	PIPE SIZE	LIST PRICE
Z667*	D.C.C.I. Body and Top	3″, 4″	1,008.00
ZN667	D.C.C.I. Body with Polished Nickel Bronze Top	3″, 4″	2,258.00

OUTLETS (SPECIFY PIPE SIZE IN INCHES AND TYPE OF OUTLET)

OUTLET	TYPE	PIPE SIZE/ OUTLET TYPE	E BODY HT. DIM.	ADD
NL	Neo-Loc	3NL, 4NL	7-15/16″ min.; 8-11/16″ max.	N/C

SUFFIXES			ADD
–AR	Acid Resisting Epoxy Coated Cast Iron (Per Section)		544.00
–ES	15″ Extension Section (Specify Number of Sections Required)	Z	1,008.00
		ZN	2,258.00
–G	Galvanized Cast Iron (Per Section)		308.00
◷ –TC	Neo-Loc Test Cap Gasket (3″, 4″ NL Bottom Outlet Only)		24.00
–TS	Top Secured with Slotted Screws (Per Section)		181.00
–V	Backwater Valve (See Z1099) (Per Section)		–
–VP	Vandal-Proof Secured Top (Per Section)		242.00

BEST SELLERS	LIST PRICE
Z667-3NL-ES(1)	2,016.00
Z667-3NL-ES(2)	3,024.00
Z667-4NL-ES(7)	8,064.00

Z668 11-1/4″ X 19-1/4″ HEAVY-DUTY DRAIN

ENGINEERING SPECIFICATION

Zurn Z668 11-1/4″ x 19-1/4″ top drain features Dura-Coated cast iron body with bottom outlet, less seepage pan, secondary strainer, and loose, heavy-duty, slotted grate.

A Pipe Size inch [mm]	Grate Open Area sq in [cm²]	Approximate Weight lb [kg]
4 [102], 6 [152]	60 [387]	115 [52]

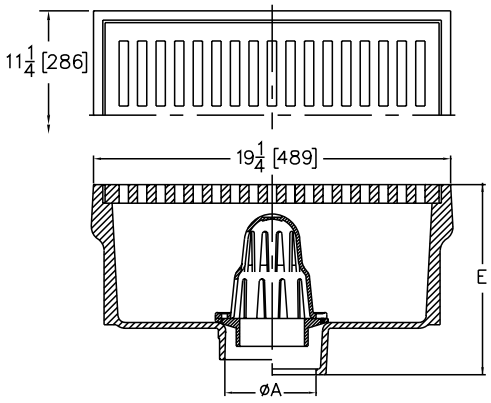

PREFIXES	DESCRIPTION	PIPE SIZE	LIST PRICE
Z668*	D.C.C.I. Body and Top	4″, 6″	6,280.00

OUTLETS (SPECIFY PIPE SIZE IN INCHES AND TYPE OF OUTLET)

OUTLET	TYPE	PIPE SIZE/OUTLET TYPE	E BODY HT. DIM.	ADD
IC	Inside Caulk	4IC, 6IC	10-1/4″	N/C
IG	Inside Caulk w/ Sealtrol Gasket	4IG, 6IG	10-1/4″	N/C
IP	Threaded	4IP, 6IP	8-5/8″	80.00
NH	No-Hub (IP w/Z1040)	4NH, 6NH	11-1/8″	N/C
NL	Neo-Loc	4NL	9-1/2″	N/C

SUFFIXES		ADD
–AR	Acid Resisting Epoxy Coated Cast Iron	3,789.00
–DG	Duresist Grate	1,971.00
–G	Galvanized Cast Iron	3,288.00
◷ –TC	Neo-Loc Test Cap Gasket (4″ NL Bottom Outlet Only)	24.00
–TS	Top Secured with Slotted Screws	211.00
–V	Backwater Valve (See Z1099)	–
–VP	Vandal-Proof Secured Top	242.00

BEST SELLERS	LIST PRICE
Z668-4NH	6,280.00
Z668-6NH	6,280.00

**Regularly furnished unless otherwise specified.*

Items designated as Best Sellers are most specified and are generally in stock for shipment.

◷ This symbol denotes a product that is engineered to reduce installation and rework time.

For additional product information, please visit www.zurn.com

Z673 29″ X 30″ EXTRA HEAVY-DUTY DRAIN

ENGINEERING SPECIFICATION

Zurn Z673 29″ x 30″ top drain features Dura-Coated cast iron body with bottom outlet, seepage pan, and combination membrane flashing clamp and frame for cast iron, extra heavy-duty, loose, slotted grate with suspended sediment bucket.

A Pipe Size inch [mm]	Grate Open Area sq in [cm²]	No. of Grates	Approximate Weight lb [kg]
4 [102]	166 [1071]	2	294 [133]
6 [152]			314 [142]

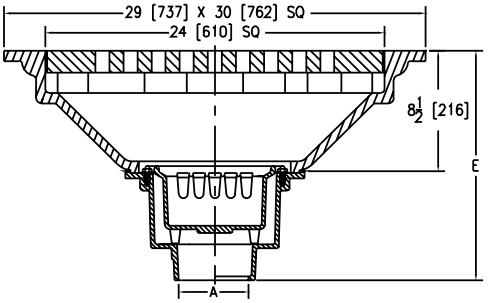

PREFIXES	DESCRIPTION	PIPE SIZE		LIST PRICE
Z673*	D.C.C.I. Body and Top	4″, 6″		40,418.00
OUTLETS (SPECIFY PIPE SIZE IN INCHES AND TYPE OF OUTLET)				
OUTLET	**TYPE**	**PIPE SIZE/OUTLET TYPE**	**E BODY HT. DIM.**	**ADD**
IP	Threaded	4IP	14-5/8″	80.00
NH	No-Hub	4NH, 6NH	16-1/4″	N/C
SUFFIXES				**ADD**
–DG	Duresist Grate			14,615.00
–G	Galvanized Cast Iron			3,658.00
–SS	Stainless Steel Mesh Liner for Bucket			417.00
–TS	Top Secured with Slotted Screws			527.00
–VP	Vandal-Proof Secured Top			604.00
BEST SELLER				**LIST PRICE**
Z673-4NH				40,418.00

Z675 13-1/2" EXTRA HEAVY-DUTY DRAIN

ENGINEERING SPECIFICATION

Zurn Z675 13-1/2" square top drain features Dura-Coated cast iron body with bottom outlet, seepage pan, and vertically adjustable, four-position frame for Duresist extra heavy-duty, loose, slotted grate with suspended sediment bucket.

A Pipe Size inch [mm]	Grate Open Area sq in [cm²]	Approximate Weight lb [kg]
3 [76], 4 [102], 6 [152]	72 [465]	110 [50]

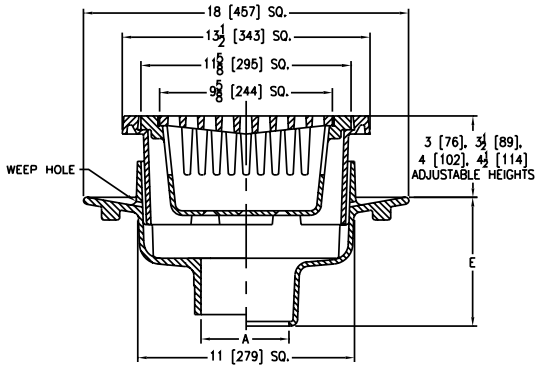

PREFIXES	DESCRIPTION	PIPE SIZE		LIST PRICE
Z675*	D.C.C.I. Body and Duresist Top	3", 4", 6"		3,127.00
OUTLETS (SPECIFY PIPE SIZE IN INCHES AND TYPE OF OUTLET)				
OUTLET TYPE		**PIPE SIZE/OUTLET TYPE**	**E BODY HT. DIM.**	**ADD**
IC	Inside Caulk	4IC	7-1/8"	N/C
IG	Inside Gasket	4IG	7-1/8"	N/C
IP	Threaded	3IP, 4IP, 6IP	7-1/8"	80.00
NH	No-Hub (IP w/ Z1040)	3NH, 4NH, 6NH	9-5/8"	See Z1040
NL	Neo-Loc	3NL, 4NL	7-5/8"	N/C
SUFFIXES				**ADD**
–AR	Acid Resisting Epoxy Coated Cast Iron			1,785.00
–C	Clamp Collar			569.00
–G	Galvanized Cast Iron			1,691.00
–TS	Top Secured with Slotted Screws			129.00
–VP	Vandal-Proof Secured Top			149.00
BEST SELLERS				**LIST PRICE**
Z675-4IC-C				3,696.00
Z675-4IC-C-VP				3,845.00
Z675-4IG-AR-C-VP				5,630.00

Z676 13-1/2" EXTRA HEAVY-DUTY DRAIN

ENGINEERING SPECIFICATION

Zurn Z676 13-1/2" square top drain features Dura-Coated cast iron body with bottom outlet, seepage pan, and vertically adjustable, four-position frame for Duresist extra heavy-duty, loose, slotted grate.

NOTES

†Add 3/4" to 13-1/2" dimension and 3/16" to 'E' dimension for ZN

A Pipe Size inch [mm]	Grate Open Area sq in [cm²]	Approximate Weight lb [kg]
3 [76], 4 [102], 6 [152]	72 [465]	95 [43]

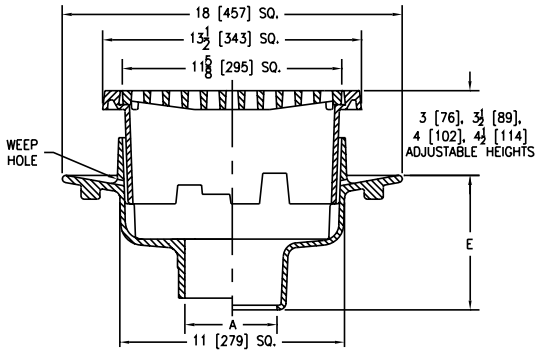

PREFIXES	DESCRIPTION	PIPE SIZE		LIST PRICE
Z676*	D.C.C.I. Body and Top	3", 4", 6"		2,945.00
ZN676	D.C.C.I. Body with Polished Nickel Bronze Top	3", 4", 6"		4,286.00
OUTLETS (SPECIFY PIPE SIZE IN INCHES AND TYPE OF OUTLET)				
OUTLET TYPE		**PIPE SIZE/OUTLET TYPE**	**E BODY HT. DIM.**	**ADD**
IC	Inside Caulk	4IC	7-1/8"	N/C
IG	Inside Gasket	4IG	7-1/8"	N/C
IP	Threaded	3IP, 4IP, 6IP	7-1/8"	80.00
NH	No-Hub (IP w/Z1040)	3NH, 4NH, 6NH	9-5/8"	See Z1040
NL	Neo-Loc	3NL, 4NL	7-5/8"	N/C
SUFFIXES				**ADD**
–AR	Acid Resisting Epoxy Coated Cast Iron			1,785.00
–C	Clamp Collar			569.00
–G	Galvanized Cast Iron			1,691.00
–TS	Top Secured with Slotted Screws			129.00
–VP	Vandal-Proof Secured Top			149.00
–Y	Sediment Bucket			184.00
BEST SELLER				**LIST PRICE**
Z676-6IP-G-Y				4,900.00

**Regularly furnished unless otherwise specified.*

Items designated as Best Sellers are most specified and are generally in stock for shipment.

This symbol denotes a product that is engineered to reduce installation and rework time.

For additional product information, please visit www.zurn.com

Z730 9″ TOP MEDIUM-DUTY DRAIN

ENGINEERING SPECIFICATION

Zurn Z730 9″ diameter top drain features Dura-Coated cast iron body with integral double wall trap and side outlet, bronze floor level cleanout plug, and medium-duty, loose, slotted grate.

NOTES

†Add 3/16″ to M and E dimensions for ZN

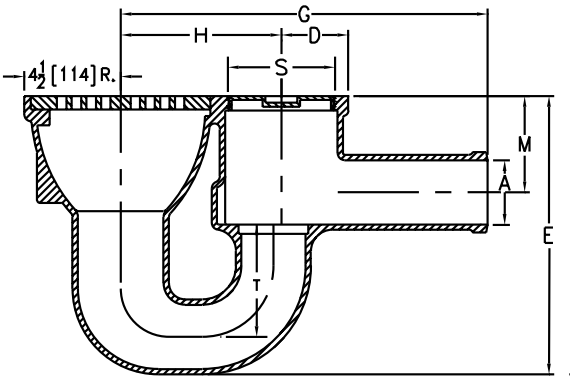

PREFIXES	DESCRIPTION	PIPE SIZE		LIST PRICE
Z730*	D.C.C.I. Body and Top	3″		1,971.00
		4″		3,927.00
ZN730	D.C.C.I. Body with Polished Nickel Bronze Top	3″		2,731.00
		4″		2,830.00
OUTLETS (SPECIFY PIPE SIZE IN INCHES AND TYPE OF OUTLET)				
OUTLET	**TYPE**	**PIPE SIZE/OUTLET TYPE**	**E BODY HT. DIM.**	**LIST PRICE**
SP	Spigot	3SP	13″	N/C
		4SP	16″	N/C
SUFFIXES				**ADD**
–DG	Duresist Grate			257.00
–G	Galvanized Cast Iron			748.00
–J	Auxiliary Inlet Connection			345.00
–K	Anchor Flange			N/C
–P	Trap Primer Connection			150.00
–V	Backwater Valve (See Z1099)		3″	660.00
			4″	719.00
–VP	Vandal-Proof Secured Top			149.00
–Y	Sediment Bucket			125.00
BEST SELLER				**LIST PRICE**
ZN730-3SP-K-VP-Y				3,005.00
SEE LEGACY ADDENDUM ON PAGE 369 FOR MORE INFORMATION				

Dimensions in inches [mm]							Grate Open Area sq in [cm²]	Approximate Weight lb [kg]
A Pipe Size	Cleanout Plug Size S	Rad. D	G	H	M	T		
3 [76]	4-1/2 [114] NPT	3-1/8 [79]	17-1/8 [203]	7-1/2 [191]	4-1/4 [108]	4 [102]	23 [148]	54 [24]
4 [102]	5-1/2 [140] NPT	3-5/8 [92]	19-3/8 [238]		4-3/4 [121]	5 [127]		79 [36]

Z742 LIGHT-DUTY TRAP DRAIN

ENGINEERING SPECIFICATION

Zurn Z742 8", 10" or 12" diameter top drain features Dura-Coated cast iron body with integral double wall trap and side outlet, ball float type backwater valve, internal bronze cleanout, and light-duty, loose, slotted grate.

NOTES

†Add 3/16" to 'E' dimension for ZB and ZN

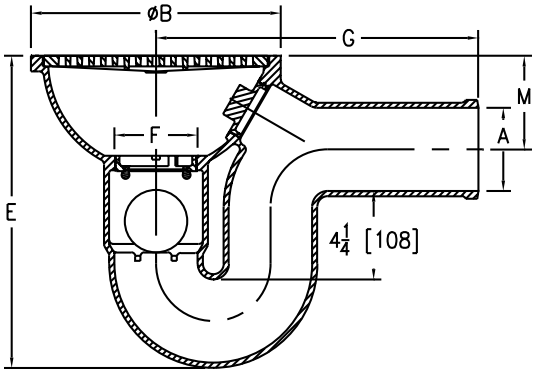

PREFIXES	DESCRIPTION	PIPE SIZE	LIST PRICE
Z742*	D.C.C.I. Body and Top	2"	843.00
		3"	1,161.00
		4"	1,625.00
ZB742	D.C.C.I. Body with Polished Bronze Top	2"	1,215.00
		3"	1,539.00
		4"	2,002.00
ZN742	D.C.C.I. Body with Polished Nickel Bronze Top	2"	1,254.00
		3"	1,577.00
		4"	2,035.00

OUTLETS (SPECIFY PIPE SIZE IN INCHES AND TYPE OF OUTLET)				
OUTLET TYPE		PIPE SIZE/OUTLET TYPE	E BODY HT. DIM.	LIST PRICE
SP	Spigot	2SP	10-3/4"	N/C
		3SP	12-3/4"	N/C
		4SP	15"	N/C
SUFFIXES				ADD
–G	Galvanized Cast Iron			488.00
–TS	Top Secured with Slotted Screws			129.00
–VP	Vandal-Proof Secured Top			149.00
				DEDUCT
–LV	Less Backwater Valve		2"	-98.00
			3", 4"	-194.00
BEST SELLER				LIST PRICE
Z742-4SP				1,625.00

Dimensions in inches [mm]					Grate Open Area sq in [cm²]	Approximate Weight lb [kg]
A Pipe Size	F	B	G	M		
2 [51]	2 [51]	8-1/4 [210]	10-1/8 [203]	3-1/2 [89]	13 [84]	17 [8]
3 [76]	3-1/2 [89]	10-1/2 [267]	12-1/2 [318]	4 [102]	19 [122]	36 [16]
4 [102]		12 [305]	15-1/2 [140]	4-1/2 [114]	40 [258]	54 [24]

*Regularly furnished unless otherwise specified.

Items designated as Best Sellers are most specified and are generally in stock for shipment.

This symbol denotes a product that is engineered to reduce installation and rework time.

For additional product information, please visit www.zurn.com

Z761 12-1/2" X 12-1/2" HEAVY-DUTY DRAIN

ENGINEERING SPECIFICATION

Zurn Z761 12-1/2" x 12-1/2" square top drain features Dura-Coated cast iron body with bottom outlet, seepage pan, and combination membrane flashing clamp and frame for heavy-duty cast iron hinged slotted grate with suspended sediment bucket, complete with threaded side outlet deep seal trap with seepage pan and adjustable cleanout with bronze plug.

NOTES

†Add 3/16"to 4-1/2" dimension and 3/16" to 12-1/2" dimension for ZN

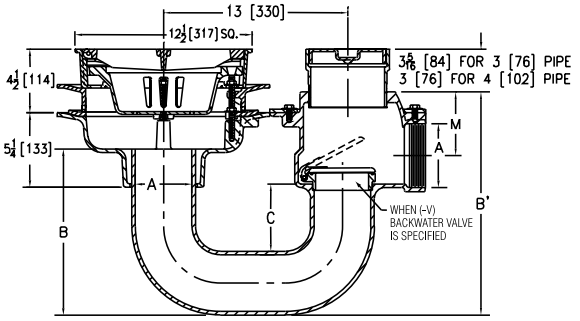

PREFIXES	DESCRIPTION	PIPE SIZE	LIST PRICE
Z761*	D.C.C.I. Body and Grate	3"	4,875.00
		4"	5,375.00
ZN761	D.C.C.I. Body with Polished Nickel Bronze Grate	3"	6,342.00
		4"	6,839.00
OUTLETS (SPECIFY PIPE SIZE IN INCHES AND TYPE OF OUTLET)			
OUTLET	**TYPE**	**PIPE SIZE/OUTLET TYPE**	**LIST PRICE**
IP	Threaded	3IP, 4IP	N/C
SUFFIXES			**ADD**
–C	Clamp Collar		118.00
–DG	Duresist Grate		615.00
–G	Galvanized Cast Iron		1,905.00
–P	Trap Primer Connection		150.00
–TS	Top Secured with Slotted Screws		129.00
–V	Backwater Valve	3"	668.00
		4"	724.00
–VP	Vandal-Proof Secured Top		149.00

Dimensions in inches [mm]					Grate Open Area sq in [cm²]	Approximate Weight lb [kg]
A Pipe Size	B	B'	C	M		
3 [76]	12-1/2 [318]	13-1/2 [343]	4-3/4 [121]	4 [102]	43 [277]	140 [64]
4 [102]	9-1/4 [235]	15-3/4 [400]	5 [127]	4-1/2 [114]		145 [66]

VP-DRIVER VANDAL-PROOF DRIVER

ENGINEERING SPECIFICATION

Zurn vandal proof screwdriver

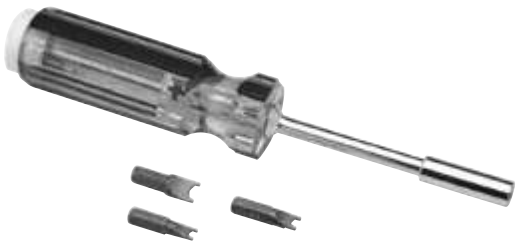

PREFIXES	DESCRIPTION	LIST PRICE
VP-Driver	Vandal-Proof Driver	37.00
SUFFIXES		**ADD**
-RB	Replacement Bits (#8, #10, and #14)	20.00

TRAPS, PRIMERS, AND BACKWATER VALVES

TRAPS, PRIMERS, AND BACKWATER VALVES – APPLICATION INDEX	156
TRAPS, PRIMERS, AND BACKWATER VALVES – OPTIONS AND VARIATIONS	156
Z1072 ZSHIELD™ BARRIER TRAP SEAL DEVICE FOR FLOOR DRAINS	157
Z1000 DEEP SEAL TRAP	158
Z1005 DEEP SEAL TRAP WITH ADJUSTABLE COVER	158
Z1012 DEEP SEAL TRAP WITH FLOOR CLEANOUT	159
Z1019 FUNNEL DRAIN WITH "P" TRAP	159
Z1020XL ELECTRONIC TRAP PRIMER	160
Z1021 WATER SAVER TRAP PRIMER WITH 1-1/2" COPPER SWEAT WALL CONNECTION	160
Z1022-XL LEAD-FREE SANI-GARD AUTOMATIC TRAP PRIMER	161
Z1023 TRAP PRIMER CONNECTION ADAPTER	161
Z1024 FIXED AIR GAP	162
Z1025 FIXED AIR GAP	162
Z1030 HUB ADAPTER	163
Z1032 INSIDE CAULK REDUCER	163
Z1033 FEMALE PIPE THREAD REDUCER	164
Z1034 FEMALE PIPE ECCENTRIC REDUCER	164
⏲ **Z1035** FLOOR DRAIN INSTALLATION STABILIZER	165
⏲ **Z1035-Q** STRUCTURAL DECK DRAIN STABILIZER	165
⏲ **Z1036** FLOOR DRAIN INSTALLATION STABILIZER	166
Z1040 NO-HUB ADAPTER	166
Z1042 ELBOW ADAPTER	167
Z1088 BACKWATER VALVE GATE TYPE	167
Z1090 BACKWATER VALVE FLAPPER TYPE	168
Z1091 BACKWATER VALVE FLAPPER TYPE	168
Z1095 BACKWATER VALVE FLAPPER TYPE	169
Z1099 BACKWATER VALVE BALL FLOAT TYPE	170

TRAPS, PRIMERS, AND BACKWATER VALVES – APPLICATION INDEX

APPLICATION	RECOMMENDED DRAINAGE PRODUCT
Deep Seal Trap	Z1000, Z1005, Z1012, Z1019, Z1021
Trap Primer	Z1020, Z1021, Z1022
Trap Primer Connection Adapter	Z1023
Fixed Air Gap	Z1024, Z1025
Pipe Thread to Hub Adapter	Z1030
Inside Caulk Reducing Ring	Z1032
Iron Pipe Flush Bushing	Z1033
Eccentric Iron Pipe Threaded Bushing	Z1034
Floor Drain Stabilizer Plate	Z1035, Z1035-Q, Z1036
Pipe Thread to 90° No-Hub Adapter	Z1040
Pipe Thread to 90° No-Hub Elbow Adapter	Z1042
Gate Type Sanitary Sewer Backwater Valve	Z1088
Storm Sewer Backwater Valve	Z1088, Z1090, Z1091, Z1095
Bottom Outlet Floor Drain Backwater Valve	Z1099

TRAPS, PRIMERS, AND BACKWATER VALVES – OPTIONS AND VARIATIONS

All Zurn backwater valve and trap optional variations are specified as a prefix and/or suffix letter or number added to the series designation. Below are the available options.

PREFIXES	DESCRIPTION
Z	Standard Assembly or D.C.C.I. Body
ZAB	Bronze Body with Polished Bronze Top
ZABN	Bronze Body with Polished Nickel Bronze Top
ZARB	All Plain Bronze Body
ZB	D.C.C.I. Body with Polished Bronze Top
ZN	D.C.C.I. Body with Polished Nickel Bronze Top

SUFFIXES	DESCRIPTION
–AR	Acid Resisting Epoxy Coated Finish
–BP	Bronze Threaded Plug Cover
–BC	Bolted Cover
–BV	Bronze Flapper Valve
–C	Clamping Collar
–CP	Chrome-Plated Finish
–DS	Dome Strainer
–DU	Additional Distribution Units
–DU2	2-Outlet Distribution Unit

SUFFIXES	DESCRIPTION
–DU3	3-Outlet Distribution Unit
–DU4	4-Outlet Distribution Unit
–FC	Adjustable Floor Cleanout (See Z1400)
–FL	Flushing Connection
–F6	6″ Diameter Funnel
–G	Galvanized Cast Iron
–LC	Less Cleanout and Plug
–P	Trap Primer Connection (1/2″ or 3/4″)
–V	Backwater Valve
–WH	Wheel Handle
–WL	One-Piece Waste Elbow
–3	3/4″ Connection
–7	7″ Long Adapter
–12	12″ Extension
–24	24″ Extension

Z1072 ZSHIELD™ BARRIER TRAP SEAL DEVICE FOR FLOOR DRAINS

ENGINEERING SPECIFICATION

Zurn Z1072 ZShield Barrier trap seal device for use with floor drains to minimize trap evaporation. Product is comprised of an ABS rigid structure, silicone gasket and seal for 2", 3", 3-1/2", and 4" sizes. Device is engineered to comply with the performance requirements of ASSE 1072 standard and is third party listed with IAPMO (UPC), ICC (ICC cES PMG) and ASSE.

NOTE

-TSP Suffix Option listed on select drains

Product Designation	Dimensions in inches [mm]		ASSE 1072 Required Flow Rate G.P.M [L.P.M]
	A Pipe Size	B	
-2	2.20 [56]	1.22 [31]	12 [45.4]
-3	3.25 [83]	1.25 [32]	34 [128.7]
-3.5	3.53 [90]	1.30 [33]	52 [196.8]
-4	4.13 [105]	1.30 [33]	73 [276.4]

PREFIXES	DESCRIPTION	PRODUCT DESIG.	PIPE SIZE	LIST PRICE
Z1072	ABS Rigid Body with Silicone Gasket and Seal	-2	2"	POA
		-3	3"	POA
		-3.5	3-1/2"	POA
		-4	4"	POA

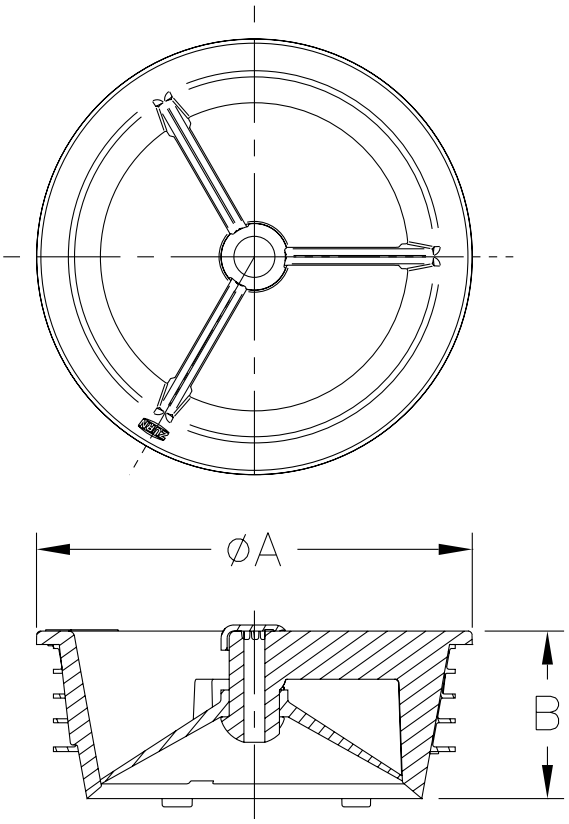

**Regularly furnished unless otherwise specified.*

Items designated as Best Sellers are most specified and are generally in stock for shipment.

This symbol denotes a product that is engineered to reduce installation and rework time.

For additional product information, please visit www.zurn.com

Z1000 DEEP SEAL TRAP

ENGINEERING SPECIFICATION

Zurn Z1000 deep seal trap features Dura-Coated cast iron body with bottom bronze cleanout plug.

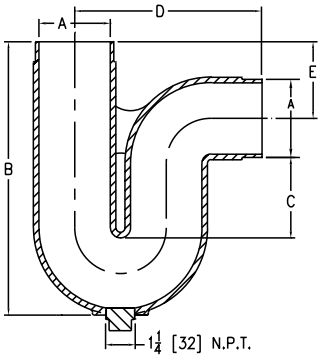

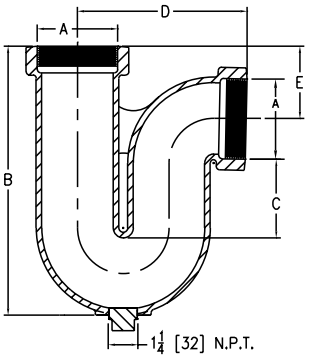

Dimensions in inches [mm]					
A Pipe Size/ Outlet Type	B	C	D	E	Approximate Weight lb [kg]
Threaded (IP)					
2IP	9-1/2 [241]	4 [102]	5-7/8 [149]	1-3/4 [44]	8 [4]
3IP	13 [330]	5 [127]	7-1/2 [191]	3 [76]	17 [8]
4IP	15 [381]		9-1/2 [241]	4 [102]	32 [15]
No-Hub (NH)					
2NH	10-1/2 [267]	4 [102]	6-1/2 [165]	2-3/4 [70]	8 [4]
3NH	13-1/2 [343]	5 [127]	8 [203]	3-1/2 [89]	17 [8]
4NH	15-1/4 [387]		9-1/2 [241]	4-1/4 [108]	32 [15]

BEST SELLERS	LIST PRICE
Z1000-3NH-P	823.00
Z1000-4NH	1,006.00

PREFIXES	DESCRIPTION	A PIPE SIZE	LIST PRICE
Z1000*	D.C.C.I. Body	2″	438.00
		3″	673.00
		4″	1,006.00
CONNECTION DESIGNATION (SPECIFY PIPE SIZE IN INCHES AND TYPE OF CONNECTION)			
CONNECTION TYPE		**PIPE SIZE/OUTLET TYPE**	**ADD**
IP	Threaded	2IP, 3IP, 4IP	N/C
NH	No-Hub	2NH, 3NH, 4NH	N/C
SUFFIXES		**PIPE SIZE**	**ADD**
–FL	Flushing Connection		150.00
–G	Galvanized Cast Iron	2″	125.00
		3″	295.00
		4″	466.00
–P	Trap Primer Connection (Specify 1/2″ or 3/4″)		150.00

Z1005 DEEP SEAL TRAP WITH ADJUSTABLE COVER

ENGINEERING SPECIFICATION

Zurn Z1005 deep seal trap features Dura-Coated cast iron body with no-hub inlet for use with bottom outlet drain, female threaded outlet connection with anchoring flange, and adjustable, floor level, gasketed, secured cast iron cover.

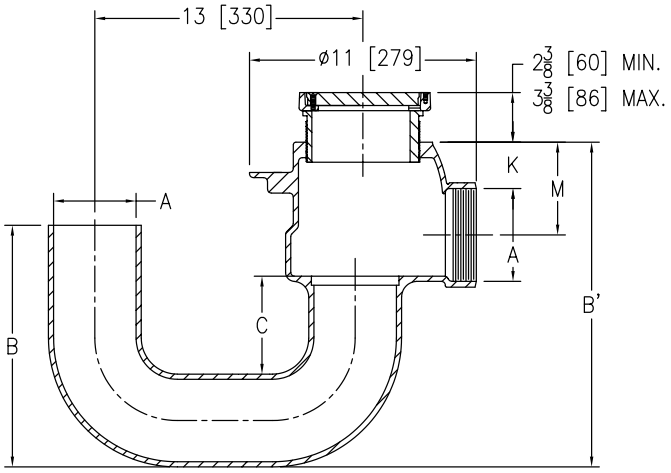

Dimensions in inches [mm]						
A Pipe Size/ Outlet Type	B	B′	C	K	M	Approximate Weight lb [kg]
Threaded (IP)						
3IP	12-1/2 [318]	13-1/2 [343]	4-3/4 [121]	1-1/4 [32]	4 [102]	75 [34]
4IP	9-1/4 [235]	15-3/4 [400]	5 [127]	1-3/4 [44]	4-1/2 [114]	85 [39]

PREFIXES	DESCRIPTION	A PIPE SIZE	LIST PRICE
Z1005*	D.C.C.I. Body and Top	3″	2,501.00
		4″	2,941.00
ZB1005	D.C.C.I. Body with Polished Scoriated Bronze Top	3″	2,783.00
		4″	3,226.00
ZN1005	D.C.C.I. Body with Polished Scoriated Nickel Bronze Top	3″	2,875.00
		4″	3,315.00
CONNECTION DESIGNATION (SPECIFY PIPE SIZE IN INCHES AND TYPE OF CONNECTION)			
CONNECTION TYPE		**PIPE SIZE/OUTLET TYPE**	**ADD**
IP	Threaded	3IP, 4IP	N/C
SUFFIXES		**PIPE SIZE**	**ADD**
–C	Clamping Collar		116.00
–G	Galvanized Cast Iron Body		977.00
–V	Backwater Valve	3″	668.00
		4″	724.00

For additional product information, please visit www.zurn.com

**Regularly furnished unless otherwise specified.*

Items designated as Best Sellers are most specified and are generally in stock for shipment.

This symbol denotes a product that is engineered to reduce installation and rework time.

Z1012 DEEP SEAL TRAP WITH FLOOR CLEANOUT

ENGINEERING SPECIFICATION

Zurn Z1012 deep seal trap features Dura-Coated cast iron body for use with bottom outlet drain, cast iron floor cleanout, and plug for caulking into top hub cleanout opening.

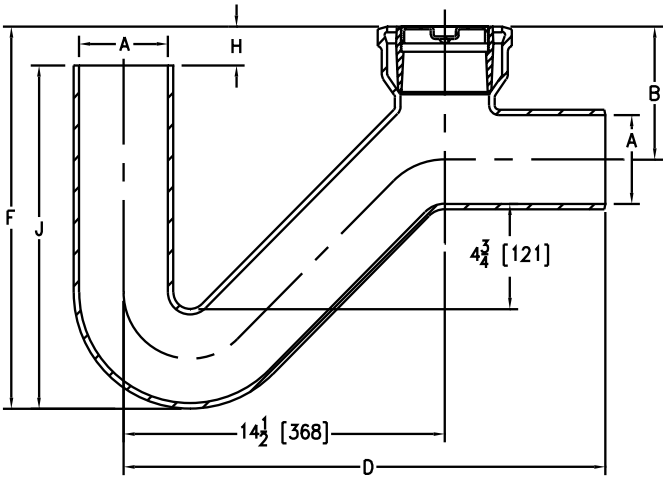

A Pipe Size/ Outlet Type	Dimensions in inches [mm] B	D	F	H	J	Approximate Weight lb [kg]
No-Hub (NH)						
2NH	4-3/4 [121]	16-1/2 [419]	12-3/4 [324]	1/4 [6]	12-1/2 [318]	43 [20]
3NH	5-1/2 [140]	21-1/2 [546]	15 [381]	1-1/4 [32]	12-3/4 [324]	45 [20]
4NH	6 [152]	21-3/4 [552]	17 [432]	1-3/4 [44]	15-1/2 [394]	47 [21]

PREFIXES	DESCRIPTION	A PIPE SIZE	LIST PRICE
Z1012*	D.C.C.I. Body	2″	**1,051.00**
		3″	**2,574.00**
		4″	**1,531.00**
CONNECTION DESIGNATION (SPECIFY PIPE SIZE IN INCHES AND TYPE OF CONNECTION)			
CONNECTION TYPE		**PIPE SIZE/OUTLET TYPE**	**ADD**
NH	No-Hub	2NH, 3NH, 4NH	**N/C**
SUFFIXES			**ADD**
–FC	Adjustable Floor Cleanout (See Z1406)		**-**
–G	Galvanized Cast Iron Body		**527.00**
		PIPE SIZE	**DEDUCT**
–LC	Less Cleanout and Plug	2″, 3″	**150.00**
		4″	**206.00**
SEE LEGACY ADDENDUM ON PAGE 369 FOR MORE INFORMATION			

Z1019 FUNNEL DRAIN WITH "P" TRAP

ENGINEERING SPECIFICATION

Zurn Z1019 Dura-Coated cast iron combination funnel and trap drain comes complete with bronze bottom cleanout plug.

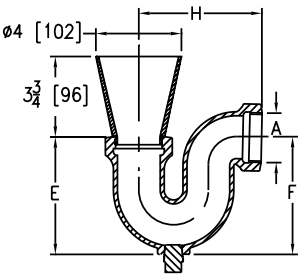

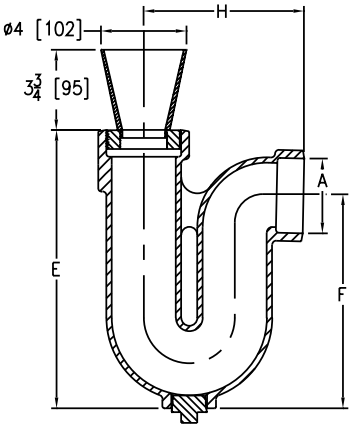

A Pipe Size/ Outlet Type	Dimensions in inches [mm] E	F	H	Approximate Weight lb [kg]
Threaded (IP)				
2IP	4-1/4 [108]	5-1/2 [140]	5-3/4 [146]	10 [5]
3IP	13 [330]	10 [254]	7-1/2 [191]	19 [9]

PREFIXES	DESCRIPTION	A PIPE SIZE	LIST PRICE
Z1019*	D.C.C.I. Body and Top	2″	**729.00**
		3″	**850.00**
ZAB1019	Bronze Body with Polished Bronze Top	2″	**1,298.00**
		3″	**1,415.00**
ZABN1019	Bronze Body with Polished Nickel Bronze Top	2″	**1,372.00**
		3″	**1,489.00**
CONNECTION DESIGNATION (SPECIFY PIPE SIZE IN INCHES AND TYPE OF CONNECTION)			
CONNECTION TYPE		**PIPE SIZE/OUTLET TYPE**	**ADD**
IP	Threaded	2IP, 3IP	**N/C**
SUFFIXES		**PIPE SIZE**	**ADD**
–AR	Acid Resisting Epoxy Coated Finish		**285.00**
–DS	Dome Strainer		**64.00**
–F6	6″ High x 6″ Diameter Funnel	Z	**109.00**
		ZAB, ZABN	**165.00**
–G	Galvanized Cast Iron Body		**308.00**
BEST SELLER			**LIST PRICE**
Z1019-2IP			**729.00**

**Regularly furnished unless otherwise specified.*

Items designated as Best Sellers are most specified and are generally in stock for shipment.

This symbol denotes a product that is engineered to reduce installation and rework time.

For additional product information, please visit www.zurn.com

Z1020XL ELECTRONIC TRAP PRIMER

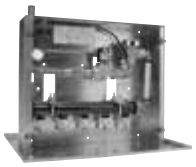

XL LEAD FREE

ENGINEERING SPECIFICATION

Zurn Z1020XL factory programmed, 5-port, lead-free electronic trap primer provides a six second water injection to traps every twenty-four hours.† Trap primer features a galvanized steel combination surface or recessed housing and cover, 1/2" solder copper inlet connection, brass ball-type stop valve, slow-closing 24 VAC solenoid valve with integral strainer, 120-24 VAC transformer, brass atmospheric vacuum breaker, PEX waterway, and anti-scaling multi-port manifold with five 1/2" male PEX outlet connections.
Min. Pressure: 3 psi
Working Pressure: 20 to 100 psig
Default Settings:
-Frequency: 24 hours
-Injection Time: 6 seconds
-Volume: 2 oz. min. per port

NOTE

†Regularly furnished unless otherwise specified. Alternative flow settings are available upon request.

Dimensions in inches [mm]		Approximate Weight lb [kg]
A Inlet Pipe Size	B Outlet Pipe Size	
1/2 [13] Solder	1/2 [13] PEX Connection	12 [5]

PREFIXES	DESCRIPTION	LIST PRICE
Z1020XL*	PEX Waterway	**4,491.00**
SUFFIXES		**ADD**
–CW	Copper Waterway (with 1/2" Female IPS Connection)	**488.00**
–DU4	Additional Distribution Units with Copper Waterway (Specify quantity. Contact Zurn for sizing specifications)	**388.00**
–VP	Vandal-Proof Secured Cover with Vandal-Proof Driver	**58.00**
–10	Ten Outlets	**610.00**
BEST SELLERS		**LIST PRICE**
Z1020XL-10		**5,101.00**
Z1020XL-10-CW		**5,589.00**
Z1020XL-5		**4,491.00**
Z1020XL-5-CW		**4,979.00**

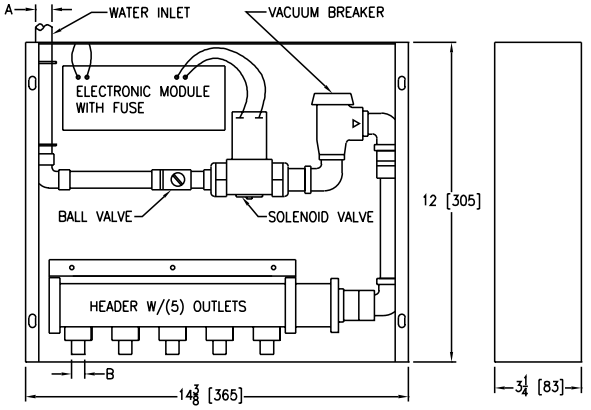

Z1021 WATER SAVER TRAP PRIMER WITH 1-1/2" COPPER SWEAT WALL CONNECTION

ENGINEERING SPECIFICATION

Zurn 1021 water saver trap primer features chrome-plated, polished cast brass body with cleanout, ground joint elbow with 1-1/2" NPT outlet, 1-1/2" slip nuts and washers, and reducing washer for 1-1/4" sink tail piece hookup, escutcheons, and stainless steel braided primer hose with 1/2" FIP compression fittings.

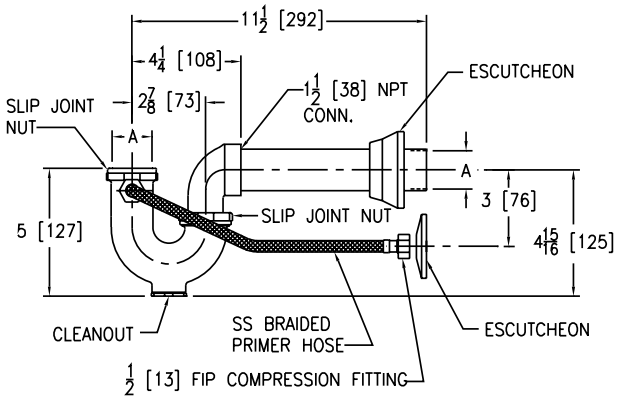

Dimensions in inches [mm]	Approximate Weight lb [kg]
A Pipe Size	
1-1/2 [38]	2 [1]

PREFIXES	DESCRIPTION	LIST PRICE
Z1021*	Polished Chrome Plated	**582.00**
SUFFIXES		**ADD**
–WL	One-piece Waste Elbow (For Slip Joint Wall Connection)	**102.00**
BEST SELLERS		**LIST PRICE**
Z1021-1-1/2		**582.00**
Z1021-1-1/2-WL		**684.00**

For additional product information, please visit www.zurn.com

**Regularly furnished unless otherwise specified.*
Items designated as Best Sellers are most specified and are generally in stock for shipment.
This symbol denotes a product that is engineered to reduce installation and rework time.

Z1022-XL LEAD-FREE SANI-GARD AUTOMATIC TRAP PRIMER

Patented

XL LEAD FREE

1018

ENGINEERING SPECIFICATION

Zurn Z1022-XL lead-free sani-gard automatic trap primer features an all bronze body with integral vacuum breaker, non-liming internal operating piston, stainless steel spring, removable bronze seat with metering orifice, and sealed bronze cover.

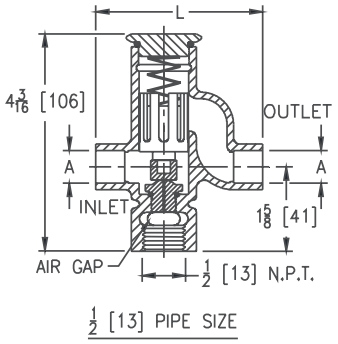

Dimensions in inches [mm]		Approximate Weight lb [kg]
A Pipe Size/Connection	L	
1/2 [13] Solder Female	3-7/32 [82]	1 [0.5]
1/2 [13] IP Female		
1/2 [13] Solder Female Union	5-21/32 [144]	1.5 [0.7]
1/2 [13] IP Female Union	5-11/32 [136]	

PREFIXES	DESCRIPTION		LIST PRICE
Z1022-XL*	All Plain Bronze Body		**Combine with connection type for pricing**
CONNECTION DESIGNATION (SPECIFY PIPE SIZE IN INCHES AND TYPE OF CONNECTION)			
CONNECTION TYPE		**PIPE SIZE/OUTLET TYPE**	**ADD**
SF	1/2" Solder Female	1/2 SF	**293.00**
IP	1/2" IP Female	1/2 IP	**293.00**
SFU	1/2" Solder Female Union	1/2 SFU	**446.00**
IPU	1/2" IP Female Union	1/2 IPU	**446.00**
SUFFIXES			**ADD**
–CP	Chrome-Plated Finish		**98.00**
–DU2	2-Outlet Distribution Unit		**303.00**
–DU3	3-Oultlet Distribution Unit		**345.00**
–DU4	4-Outlet Distribution Unit		**388.00**
–RK	Repair Kit		**142.00**
BEST SELLERS			**LIST PRICE**
Z1022-XL-1/2-IP			**293.00**
Z1022-XL-1/2-IPU			**446.00**
Z1022-XL-1/2-SF			**293.00**
Z1022-XL-1/2-SFU			**446.00**

Z1023 TRAP PRIMER CONNECTION ADAPTER

ENGINEERING SPECIFICATION

Zurn Z1023 trap primer connection adapter features Dura-Coated cast iron body with 1/2" female threaded side inlet trap primer connection.

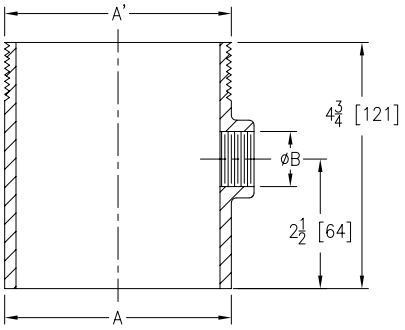

Dimensions in inches [mm]		Approximate Weight lb [kg]
A x A'	B	
No-Hub x No-Hub		
2NH x 2NH	1/2 [13]	2 [1]
3NH x 3NH		4 [2]
4NH x 4NH		6 [3]
Threaded x No-Hub		
2IP x 2NH	1/2 [13]	2 [1]
3IP x 3NH		4 [2]
4IP x 4NH		6 [3]

PREFIXES	DESCRIPTION	PIPE SIZE	LIST PRICE
Z1023*	D.C.C.I. Body	2", 3", 4"	**Combine with connection type for pricing**
CONNECTION DESIGNATION (SPECIFY PIPE SIZE IN INCHES AND TYPE OF CONNECTION)			
CONNECTION TYPE		**PIPE SIZE/OUTLET TYPE**	**ADD**
NH x NH	No-Hub x No-Hub	2NH x 2NH, 3NH x 3NH, 4NH x 4NH	**194.00**
IP x NH	Threaded x No-Hub	2IP x 2NH, 3IP x 3NH, 4IP x 4NH	**194.00**
SUFFIXES			**ADD**
–G	Galvanized Cast Iron Body		**98.00**
BEST SELLERS			**LIST PRICE**
Z1023-2NH			**194.00**
Z1023-3NH			**194.00**
Z1023-4NH			**194.00**

**Regularly furnished unless otherwise specified.*

Items designated as Best Sellers are most specified and are generally in stock for shipment.

This symbol denotes a product that is engineered to reduce installation and rework time.

For additional product information, please visit www.zurn.com

Z1024 FIXED AIR GAP

ENGINEERING SPECIFICATION

Zurn Z1024 fixed air gap features Dura-Coated cast iron body with slip joint inlet and NPT outlet.

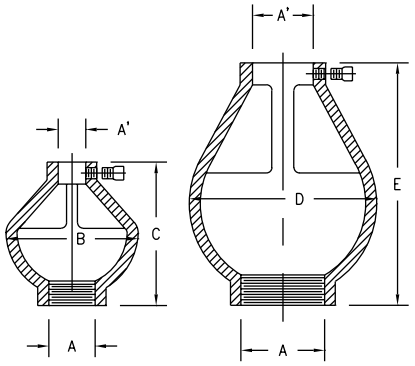

Product Designation	Dimensions in inches [mm]					Approximate Weight lb [kg]
	A' x A SJ x N.P.T.	B	C	D	E	
-1	1/4 [6] x 3/4 [19]	3 [76]	3-1/4 [83]	-	-	1 [0.5]
-2	1/2 [13] x 3/4 [19]	-	-	4-1/4 [108]	5-1/2 [140]	3 [1]
-3	1/2 [13] x 1 [25]	-	-			
-4	3/4 [19] x 1-1/2 [38]	-	-			
-5	1 [25] x 1-1/2 [38]	-	-			

PREFIXES	DESCRIPTION	PRODUCT DESIG.	PIPE SIZE/OUTLET TYPE	LIST PRICE
Z1024*	D.C.C.I. Body	-1	1/4SJ x 3/4N.P.T.	**314.00**
		-2	1/2SJ x 3/4N.P.T.	**314.00**
		-3	1/2SJ x 1N.P.T.	**343.00**
		-4	3/4SJ x 1-1/2N.P.T.	**436.00**
		-5	1SJ x 1-1/2N.P.T.	**436.00**
SUFFIXES				**ADD**
–G	Galvanized Cast Iron			**206.00**
BEST SELLER				**LIST PRICE**
Z1024-5				**436.00**

Z1025 FIXED AIR GAP

ENGINEERING SPECIFICATION

Zurn Z1025 fixed air gap features Dura-Coated cast iron body with slip joint inlet and no-hub outlet.

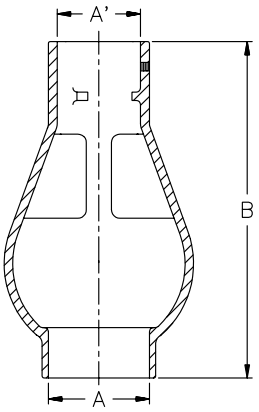

Product Designation	Dimensions in inches [mm]		Approximate Weight lb [kg]
	A' x A SJ x NH	B	
-2	1-1/2 [38] x 2 [51]	10 [254]	4 [2]
-3	2 [51] x 3 [76]		8 [4]
-4	3 [76] x 4 [102]		20 [9]
-6	4 [102] x 6 [152]		32 [15]

PREFIXES	DESCRIPTION	PRODUCT DESIG.	PIPE SIZE/OUTLET TYPE	LIST PRICE
Z1025*	D.C.C.I. Body	-2	1-1/2SJ x 2NH	**302.00**
		-3	2SJ x 3NH	**365.00**
		-4	3SJ x 4NH	**532.00**
		-6	4SJ x 6NH	**1,253.00**
ZARB1025	All Plain Bronze Body	-2	1-1/2SJ x 2NH	**660.00**
		-3	2SJ x 3NH	**990.00**
		-4	3SJ x 4NH	**1,302.00**
		-6	4SJ x 6NH	**3,531.00**
SUFFIXES				**ADD**
–G	Galvanized Cast Iron			**206.00**
BEST SELLERS				**LIST PRICE**
Z1025-2				**302.00**
Z1025-4				**532.00**

For additional product information, please visit www.zurn.com

**Regularly furnished unless otherwise specified.*

Items designated as Best Sellers are most specified and are generally in stock for shipment.

This symbol denotes a product that is engineered to reduce installation and rework time.

Z1030 HUB ADAPTER

ENGINEERING SPECIFICATION

Zurn Z1030 hub adapter features Dura-Coated cast iron with male NPT threaded and hub connections.

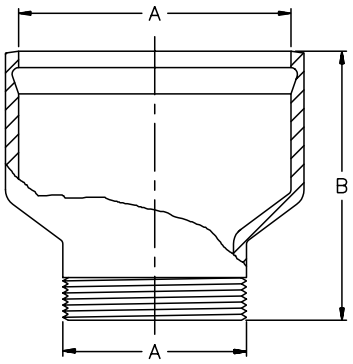

Product Designation	Dimensions in inches [mm] Pipe Size A	B	Approximate Weight lb [kg]
-2	2 [51]	4-1/4 [108]	3 [1]
-3	3 [76]	4-3/8 [111]	5 [2]
-4	4 [102]	4-3/4 [121]	6 [3]
-6	6 [152]	5 [127]	9 [4]

PREFIXES	DESCRIPTION	PRODUCT DESIG.	PIPE SIZE/OUTLET TYPE	LIST PRICE
Z1030*	D.C.C.I. Body with Threaded x Hub Connection Type	-2	2IP x 2HB	**98.00**
		-3	3IP x 3HB	**178.00**
		-4	4IP x 4HB	**242.00**
		-6	6IP x 6HB	**455.00**
SUFFIXES			**PIPE SIZE**	**ADD**
–G	Galvanized Cast Iron		2″, 3″, 4″	**81.00**
			6″	**125.00**

Z1032 INSIDE CAULK REDUCER

ENGINEERING SPECIFICATION

Zurn Z1032 inside caulk features Dura-Coated cast iron reducing ring.

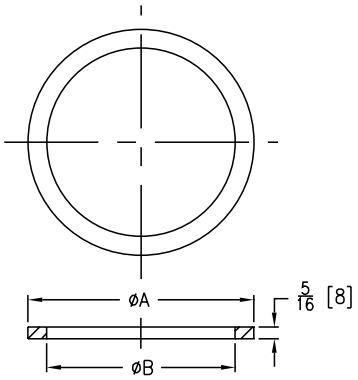

Product Designation	Dimensions in inches [mm] Pipe Size A	B	Approximate Weight lb [kg]
-3 x 2	3 [76]	2 [51]	1 [0.5]
-4 x 2	4 [102]		
-4 x 3		3 [76]	
-6 x 4	6 [152]	4 [102]	1.5 [0.7]
-6 x 5		5 [127]	

PREFIXES	DESCRIPTION	PRODUCT DESIG.	LIST PRICE
Z1032*	Dura-Coated Cast Iron Reducing Ring	-3 x 2	**47.00**
		-4 x 2	**58.00**
		-4 x 3	**79.00**
		-6 x 4	**118.00**
		-6 x 5	**140.00**

**Regularly furnished unless otherwise specified.*

Items designated as Best Sellers are most specified and are generally in stock for shipment.

This symbol denotes a product that is engineered to reduce installation and rework time.

For additional product information, please visit www.zurn.com

Z1033 FEMALE PIPE THREAD REDUCER

ENGINEERING SPECIFICATION

Zurn Z1033 female pipe thread reducer features cast iron construction and is available in ranging sizes.

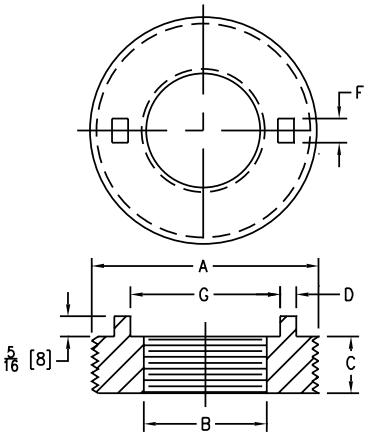

PREFIXES	DESCRIPTION	PRODUCT DESIG.	LIST PRICE
Z1033*	Male Thread x Female Thread Cast Iron Reducer	-1 x .75	84.00
		-1.5 x 1.25	84.00
		-2 x 1.25	84.00
		-2 x 1.5	84.00
		-3 x 1.5	99.00
		-3 x 2	189.00
		-4 x 2	107.00
		-4 x 3	107.00
		-6 x 4	140.00
		-6 x 5	140.00

SEE LEGACY ADDENDUM ON PAGE 369 FOR MORE INFORMATION

Product Designation	Dimensions in inches [mm]						Approximate Weight lb [kg]
	A	B	C	D	F	G	
-1 x .75	1 [25]	3/4 [19]	7/16 [11]	-	-	-	.5 [.25]
-1.5 x 1.25	1-1/2 [38]	1-1/4 [32]	1/2 [13]	-	-	-	
-2 x 1.25	2 [51]		9/16 [14]	1/8 [3]	3/8 [9]	1-29/32 [48]	
-2 x 1.5		1-1/2 [38]					1 [0.5]
-3 x 1.5	3 [76]		7/8 [22]	1/4 [6]		2-5/16 [59]	
-3 x 2		2 [51]			1/2 [13]	2-35/64 [65]	1.5 [1]
-4 x 2	4 [102]		1-1/8 [29]			3-1/16 [78]	3 [1]
-4 x 3		3 [76]				3-37/64 [91]	2 [1]
-6 x 4	6 [152]	4 [102]		5/16 [8]		5-1/8 [130]	6 [3]
-6 x 5		5 [127]				5-21/32 [144]	3.75 [2]

Z1034 FEMALE PIPE ECCENTRIC REDUCER

ENGINEERING SPECIFICATION

Zurn Z1034 female pipe thread eccentric reducer features cast iron construction and is available in a range of sizes.

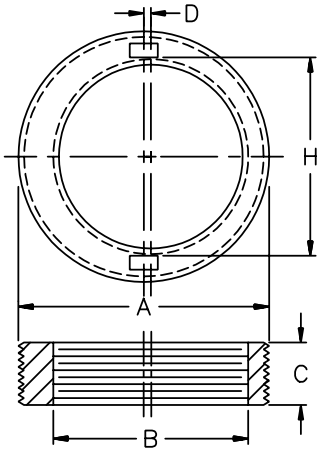

Product Designation	Dimensions in inches [mm]					Approximate Weight lb [kg]
	A	B	C	D	H	
-3 x 2	3 [76]	2 [51]	7/8 [22]	3/16 [5]	2-5/8 [67]	1 [0.5]
-4 x 2	4 [102]			11/16 [17]	3 [76]	3 [1]
-4 x 3		3 [76]	1-1/8 [29]	1/8 [3]	3-9/16 [90]	1.5 [0.7]

PREFIXES	DESCRIPTION	PRODUCT DESIG.	LIST PRICE
Z1034*	Female Pipe Thread Cast Iron Reducer	-3 x 2	158.00
		-4 x 2	140.00
		-4 x 3	264.00

SEE LEGACY ADDENDUM ON PAGE 369 FOR MORE INFORMATION

For additional product information, please visit www.zurn.com

**Regularly furnished unless otherwise specified.*

Items designated as Best Sellers are most specified and are generally in stock for shipment.

This symbol denotes a product that is engineered to reduce installation and rework time.

Z1035 FLOOR DRAIN INSTALLATION STABILIZER

Patented

ENGINEERING SPECIFICATION

Zurn Z1035 floor drain installation stabilizer features #20 gage, galvanized steel plate with variable pipe opening, four support stud holes, and four nail holes. Complete with hardware bag containing four 3/8"-16 x 12" long studs and eight 3/8"-16 flanged locknuts.

NOTE

1. 7-5/8" diameter stud holes are used to accommodate 8-3/8" diameter drain body. (To be used with no-hub and Neo-Loc outlet connections only.)
2. For typical installation, see Form No. FD72.

Dimensions in inches [mm]	
Pipe Size	Pipe Opening Diameter
2 [51]	2-9/16 [65]
3 [76]	3-11/16 [94]
4 [102]	4-11/16 [119]

PREFIXES	DESCRIPTION	PIPE SIZE	LIST PRICE
Z1035*	Galvanized Steel Plate	2", 3", 4"	138.00

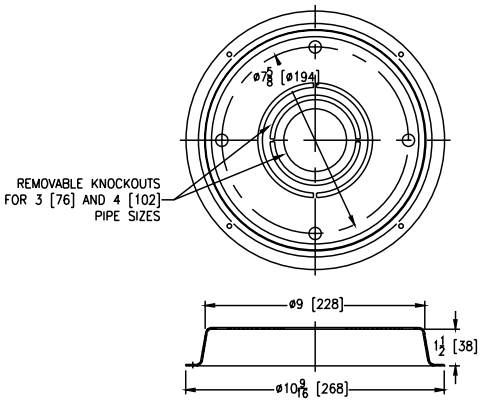

ZN415 Floor Drain with Z1035 Stabilizer

Z1035-Q STRUCTURAL DECK DRAIN STABILIZER

Patented

ENGINEERING SPECIFICATION

Zurn Z1035-Q structural deck drain stabilizer for Q-deck features #16 gage galvanized steel plate with four support stud slots, and six (6) nail holes. Complete with hardware bag containing four 3/8"-16 x 12" long studs and eight 3/8"-16 flanged locknuts.

NOTE

Designed for use with 8-3/8" diameter drain body.

PREFIXES	DESCRIPTION	LIST PRICE
Z1035-Q*	Galvanized Steel Plate	184.00

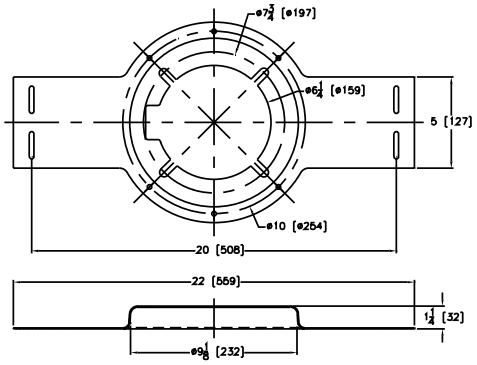

ZN158 Floor Drain with Z1035-Q Stabilizer

*Regularly furnished unless otherwise specified.

Items designated as Best Sellers are most specified and are generally in stock for shipment.

This symbol denotes a product that is engineered to reduce installation and rework time.

For additional product information, please visit www.zurn.com

Z1036 FLOOR DRAIN INSTALLATION STABILIZER

Patented

ENGINEERING SPECIFICATION

Zurn Z1036 floor drain installation stabilizer features #16 gage, galvanized steel plate with variable pipe opening, eight support stud holes, and four nail holes. Complete with hardware bag containing four 3/8"-16 x 12" long studs and eight 3/8"-16 flanged locknuts.

NOTE

1. 'B' diameter stud holes are used to accommodate 12" diameter drain body. 'C' diameter stud holes are used to accommodate 15" diameter drain body. (To be used with no-hub and Neo-Loc outlet connections only.)
2. For typical installation, see Form No. FD72.

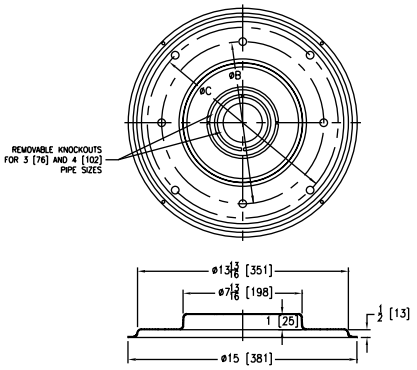

Dimensions in inches [mm]			
Pipe Size	Pipe Opening Diameter	B	C
2 [51]	2-9/16 [65]	10-5/8 [270]	12-1/2 [318]
3 [76]	3-11/16 [94]		
4 [102]	4-11/16 [119]		

PREFIXES	DESCRIPTION	PIPE SIZE	LIST PRICE
Z1036*	Galvanized Steel Plate	2", 3", 4"	**148.00**

ZN150 Floor Drain with Z1036 Stabilizer

Z1040 NO-HUB ADAPTER

ENGINEERING SPECIFICATION

Zurn Z1040 no-hub adapter features Dura-Coated cast iron with male NPT threaded and no-hub connections.

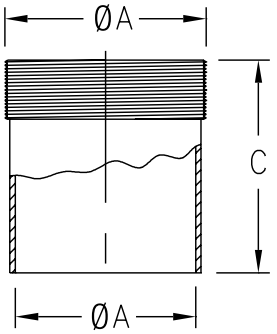

Product Designation	Dimensions in inches [mm]		Approximate Weight lb [kg]
	A Pipe Size	C	
-2	2 [51]	3-1/2 [89]	1 [0.5]
-3	3 [76]		2 [1]
-4	4 [102]		3 [1]
-5	5 [127]		4 [2]
-6	6 [152]		5 [2]
-8	8 [203]		8 [4]
-10	10 [254]		11 [5]
-12	12 [305]		23 [10]

PREFIXES	DESCRIPTION	PRODUCT DESIG.	PIPE SIZE/OUTLET TYPE	LIST PRICE
Z1040*	D.C.C.I. Body with Male Thread x No-Hub Connection Type	-2	2IP x 2NH	**98.00**
		-3	3IP x 3NH	**140.00**
		-4	4IP x 4NH	**219.00**
		-5	5IP x 5NH	**532.00**
		-6	6IP x 6NH	**668.00**
		-8	8IP x 8NH	**742.00**
		-10	10IP x 10NH	**885.00**
		-12	12IP x 12NH	**1,108.00**

SUFFIXES		ADD
–G	Galvanized Cast Iron	**87.00**

BEST SELLERS	LIST PRICE
Z1040-3NH	**140.00**
Z1040-4NH	**219.00**
Z1040-6NH	**668.00**

For additional product information, please visit www.zurn.com

**Regularly furnished unless otherwise specified.*

Items designated as Best Sellers are most specified and are generally in stock for shipment.

This symbol denotes a product that is engineered to reduce installation and rework time.

Z1042 ELBOW ADAPTER

ENGINEERING SPECIFICATION

Zurn Z1042 elbow adapter features Dura-Coated cast iron with male NPT threaded and no-hub connections.

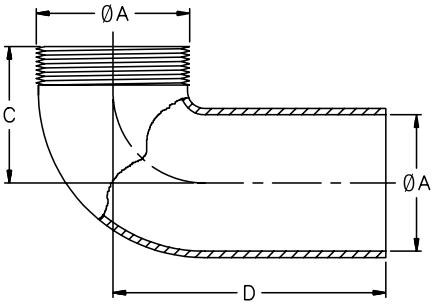

Product Designation	Dimensions in inches [mm]			Approximate Weight lb [kg]
	A Pipe Size	C	D	
-3	3 [76]	3-3/4 [95]	7 [178]	8 [4]
-4	4 [102]	4 [102]	8 [203]	14 [6]
-6	6 [152]	5-1/2 [140]	9 [229]	25 [11]

PREFIXES	DESCRIPTION	PRODUCT DESIG.	PIPE SIZE/OUTLET TYPE	LIST PRICE
Z1042*	D.C.C.I. Body with Male Thread and No-Hub Connection Type	-3	3IP x 3NH	532.00
		-4	4IP x 4NH	604.00
		-6	6IP x 6NH	1,357.00
SUFFIXES			**PIPE SIZE**	**ADD**
–G	Galvanized Cast Iron		3″	107.00
			4″	223.00
			6″	343.00

SEE LEGACY ADDENDUM ON PAGE 369 FOR MORE INFORMATION

Z1088 BACKWATER VALVE GATE TYPE

ENGINEERING SPECIFICATION

Zurn Z1088 backwater valve features Dura-Coated cast iron body, automatic PVC (4″ size only) flapper type backwater valve with O-ring adjacent to inlet, and spade type bronze gate valve with O-ring seat insert adjacent to outlet, easily controlled at floor level by covered handle engaging bronze non-rising stem.

NOTE

Not designed nor intended to be used as a shut-off valve.

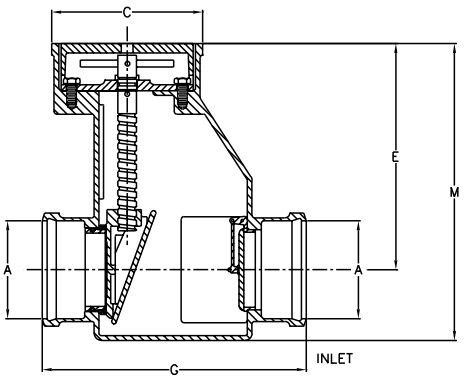

Product Designation	Dimensions in inches [mm]				Approximate Weight lb [kg]
	A Pipe Size	C	E	M	
-4	4 [102]	8 [203]	12 [305]	15-3/4 [400]	80 [36]
-6	6 [152]	10-1/2 [267]	14-1/2 [368]	19 [483]	120 [54]

PREFIXES	DESCRIPTION	PIPE SIZE	LIST PRICE
Z1088*	D.C.C.I. Body and Cover with PVC Flapper Valve, Bronze Check Valve, Gate, and Stem	4″, 6″	Combine with connection type for pricing
CONNECTION DESIGNATION (SPECIFY PIPE SIZE IN INCHES AND TYPE OF CONNECTION)			
PRODUCT DESIG.	**CONNECTION TYPE**	**PIPE SIZE/ OUTLET TYPE**	**ADD**
-4	Hub x Hub	4HB x 4HB	4,433.00
	Hub x No-Hub	4HB x 4NH	4,433.00
	No-Hub x No-Hub	4NH x 4NH	4,433.00
-6	Hub x Hub	6HB x 6HB	6,805.00
	Hub x No-Hub	6HB x 6NH	6,805.00
	No-Hub x No-Hub	6NH x 6NH	6,805.00
SUFFIXES		**PIPE SIZE**	**ADD**
–BV	Bronze Flapper Valve (4″ Size)		N/C
–G	Galvanized Cast Iron Body		1,337.00
–WH	Wheel Handle		577.00
–12	12″ Extension	4″	2,063.00
		6″	2,370.00
–24	24″ Extension	4″	2,892.00
		6″	3,162.00
BEST SELLER			**LIST PRICE**
Z1088-4NH			4,433.00

**Regularly furnished unless otherwise specified.*

Items designated as Best Sellers are most specified and are generally in stock for shipment.

This symbol denotes a product that is engineered to reduce installation and rework time.

Z1090 BACKWATER VALVE FLAPPER TYPE

ENGINEERING SPECIFICATION

Zurn Z1090 backwater valve features Dura-Coated cast iron body, no-hub inlet and outlet, gasketed bolted cover, and automatic PVC (3″ and 4″ sizes only) flapper type backwater valve with O-ring.

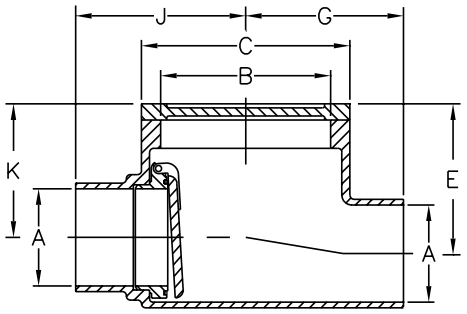

PREFIXES	DESCRIPTION	PRODUCT DESIG.	PIPE SIZE/OUTLET TYPE	LIST PRICE
Z1090*	D.C.C.I. Body with No-Hub Connection Type	-2	2NH	1,298.00
		-3	3NH	2,031.00
		-4	4NH	2,501.00
		-6	6NH	3,597.00

SUFFIXES		ADD
–BP	Bronze Threaded Plug Cover	N/C
–BV	Bronze Flapper Valve (3″ and 4″ Size)	N/C
–G	Galvanized Cast Iron Body	343.00

BEST SELLERS	LIST PRICE
Z1090-2NH	1,298.00
Z1090-3NH	2,031.00
Z1090-4NH	2,501.00
Z1090-4NH-BV	2,501.00
Z1090-6NH	3,597.00

Product Designation	Dimensions in inches [mm]							Approximate Weight lb [kg]
	A Pipe Size	B	C	E	G	J	K	
-2	2 [51]	5-1/4 [133]	6-1/2 [165]	4-5/8 [117]	4-7/8 [124]	5-1/4 [133]	3-5/8 [92]	16 [7]
-3	3 [76]			4-1/8 [105]				17 [8]
-4	4 [102]	6-3/8 [162]	7-1/2 [191]	4-3/4 [121]	6 [152]	6 [152]	4-1/4 [108]	22 [10]
-6	6 [152]	8-1/4 [210]	9-1/2 [241]	7-1/2 [191]	6-5/8	7-7/16	6 [152]	34 [15]

Z1091 BACKWATER VALVE FLAPPER TYPE

ENGINEERING SPECIFICATION

Zurn Z1091 backwater valve features Dura-Coated cast iron body, hub inlet and open outlet for installation at end of drainage line, and automatic PVC (3″ and 4″ sizes only) flapper type backwater valve with O-ring.

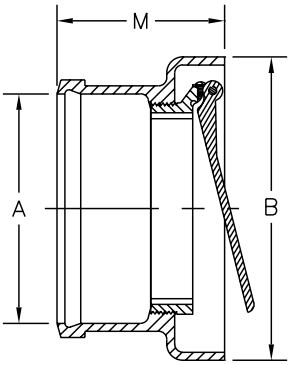

Product Designation	Dimensions in inches [mm]			Approximate Weight lb [kg]
	A Pipe Size	B	M	
-3	3 [76]	7 [178]	5 [127]	12 [5]
-4	4 [102]	7-1/2 [191]		15 [7]
-6	6 [152]	9-1/2 [241]	5-1/4 [133]	28 [13]
-8	8 [203]	11-1/2 [292]	6 [152]	42 [19]
-10	10 [254]	14 [356]	7 [178]	58 [26]

PREFIXES	DESCRIPTION	PRODUCT DESIG.	PIPE SIZE/OUTLET TYPE	LIST PRICE
Z1091*	D.C.C.I. Body with Hub Connection Type	-3	3HB	544.00
		-4	4HB	791.00
		-6	6HB	2,250.00
		-8	8HB	2,737.00
		-10	10HB	8,234.00

SUFFIXES		PIPE SIZE	ADD
–BV	Bronze Flapper Valve (3″ and 4″ Size)		N/C
–G	Galvanized Cast Iron	3″, 4″	308.00
		6″	435.00
		8″, 10″	898.00

**Regularly furnished unless otherwise specified.*

Items designated as Best Sellers are most specified and are generally in stock for shipment.

This symbol denotes a product that is engineered to reduce installation and rework time.

Z1095 BACKWATER VALVE FLAPPER TYPE

ENGINEERING SPECIFICATION

Zurn Z1095 backwater valve features Dura-Coated cast iron body, hub inlet and offset spigot outlet, bronze threaded cover, and automatic PVC (3" and 4" sizes only) flapper type backwater valve with O-ring.

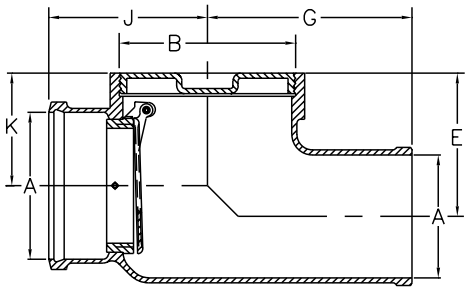

PREFIXES	DESCRIPTION	PRODUCT DESIG.	PIPE SIZE/OUTLET TYPE	LIST PRICE
Z1095*	D.C.C.I. Body with Hub x Spigot Connection Type	-2	2HB x 2SP	**1,298.00**
		-3	3HB x 3SP	**2,027.00**
		-4	4HB x 4SP	**2,501.00**
		-6	6HB x 6SP	**3,596.00**
		-8	8HB x 8SP	**5,052.00**
		-10	10HB x 10SP	**8,246.00**

SUFFIXES		PIPE SIZE	ADD
–BC	Bolted Cover		**N/C**
–BV	Bronze Flapper Valve (3" and 4" Size)		**N/C**
–G	Galvanized Cast Iron	2" thru 4"	**527.00**
		6"	**876.00**
		8", 10"	**1,568.00**

BEST SELLERS	LIST PRICE
Z1095-10HS	**8,246.00**
Z1095-6HS	**3,596.00**
Z1095-8HS	**5,052.00**

Product Designation	Dimensions in inches [mm]						Approximate Weight lb [kg]
	A Pipe Size	B	E	G	J	K	
-2	2 [51]	4 [102]	4-3/8 [111]	7 [178]	5 [127]	2-7/8 [73]	23 [10]
-3	3 [76]	5 [127]	5-1/8 [130]	8 [203]	6 [152]	3-5/8 [92]	30 [14]
-4	4 [102]	6 [152]	5-5/8 [143]	8-1/2 [216]	6-3/4 [171]	4-1/8 [105]	34 [15]
-6	6 [152]	8 [203]	6 [152]	10 [254]	7-3/4 [197]	4-1/2 [114]	57 [26]
-8	8 [203]	10 [254]	7-1/2 [191]	11-7/8 [302]	9-3/8 [238]	6 [152]	79 [36]
-10	10 [254]	12 [305]		12-3/4 [324]	10-7/8 [276]	7 [178]	102 [46]

**Regularly furnished unless otherwise specified.*

Items designated as Best Sellers are most specified and are generally in stock for shipment.

This symbol denotes a product that is engineered to reduce installation and rework time.

For additional product information, please visit www.zurn.com

Z1099 BACKWATER VALVE BALL FLOAT TYPE

ENGINEERING SPECIFICATION

Zurn Z1099 backwater valve features Dura-Coated cast iron body, plastic ball float, bronze backwater bushing, and replaceable neoprene seat.

Product Designation	Dimensions in inches [mm]			Approximate Weight lb [kg]
	A Pipe Size	B	C	
-3	3 [76]	3 [76]	6-1/2 [165]	7 [3]
-4	4 [102]	4 [102]		9 [4]
-6	6 [152]	6 [152]		25 [11]

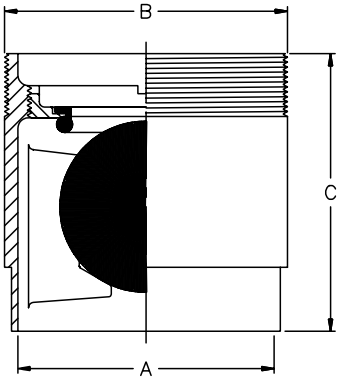

PREFIXES	DESCRIPTION	PIPE SIZE	LIST PRICE
Z1099*	D.C.C.I. Body	3″ 4″, 6″	**Combine with connection type for pricing**

CONNECTION DESIGNATION (SPECIFY PIPE SIZE IN INCHES AND TYPE OF CONNECTION)			
PRODUCT DESIG.	CONNECTION TYPE	PIPE SIZE/OUTLET TYPE	ADD
-3	Threaded x No-Hub	3IP x 3NH	**580.00**
	No-Hub x No-Hub	3NH x 3NH	**580.00**
-4	Threaded x No-Hub	4IP x 4NH	**580.00**
	No-Hub x No-Hub	4NH x 4NH	**580.00**
-6	Threaded x No-Hub	6IP x 6NH	**1,199.00**
	No-Hub x No-Hub	6NH x 6NH	**1,199.00**
SUFFIXES			**ADD**
–G	Galvanized Cast Iron	3″, 4″	**107.00**
		6″	**272.00**

BEST SELLERS	LIST PRICE
Z1099-3NHX2NH	**580.00**
Z1099-3NHX3NH	**580.00**
Z1099-4NHX4NH	**580.00**

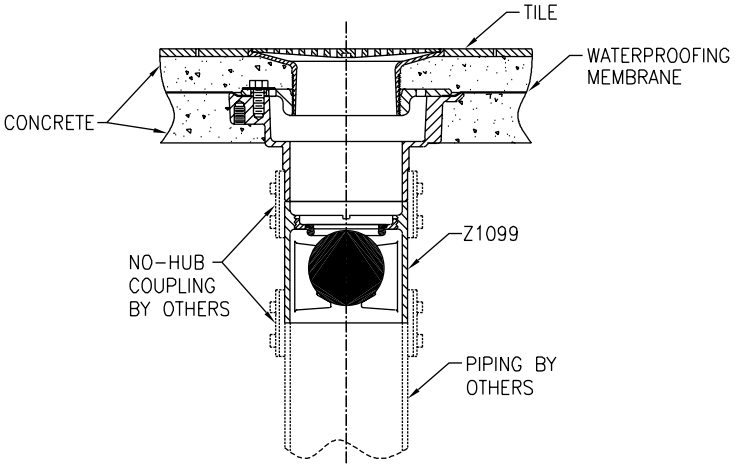

Z1099 shown installed on the outlet of a floor drain. In order for the Z1099 to operate properly, it must always be installed in a vertical position as illustrated.

**Regularly furnished unless otherwise specified.*

Items designated as Best Sellers are most specified and are generally in stock for shipment.

This symbol denotes a product that is engineered to reduce installation and rework time.

INTERCEPTORS

INTERCEPTORS – GENERAL INFORMATION 172
INTERCEPTORS – APPLICATION INDEX 172
GREASE INTERCEPTORS – PURPOSE 172
GREASE INTERCEPTORS – OPERATION 173
Z250H FOG-CEPTOR® INTERCEPTOR 174
Z1165 100 PPM GREASE INTERCEPTOR SYSTEM WITH SOLIDS INTERCEPTOR 175
Z1170 GREASE INTERCEPTOR 176
Z1170-UN GREASE INTERCEPTOR WITH USER NOTIFICATION SYSTEM 177
ZS1170 GREASE INTERCEPTOR STAINLESS STEEL 178
Z1171 LOW PROFILE GREASE INTERCEPTOR 179
Z1171-TD LOW PROFILE GREASE INTERCEPTOR WITH ACCUMULATING CONE AND FLOW CONTROL TEE 180
Z1172 LARGE CAPACITY GREASE INTERCEPTOR 181
Z1172-UN LARGE CAPACITY GREASE INTERCEPTOR WITH USER NOTIFICATION SYSTEM 182
Z1173 EJECTO-MATIC GREASE INTERCEPTOR 183
Z1173-TD EJECTO-MATIC GREASE INTERCEPTOR WITH GREASE ACCUMULATING CONE AND IN-LINE SHUTOFF VALVE 184
Z1174 GREASE EATING BACTERIA DOSING UNIT AND SOLIDS INTERCEPTOR COMBINATION 185
SOLIDS INTERCEPTORS – GENERAL PRODUCT INFORMATION 186
SOLIDS INTERCEPTORS – APPLICATION INDEX 186
SOLIDS INTERCEPTORS – SIZING 186
Z1175 HAIR INTERCEPTOR 187
Z1176 HAIR INTERCEPTOR 187
Z1180 SOLIDS INTERCEPTOR 188
Z1181 SOLIDS INTERCEPTOR 188
Z1182 SIDE ACCESS SOLIDS INTERCEPTOR 189
Z1183 SOLIDS INTERCEPTOR 189
Z1183-DF SOLIDS INTERCEPTOR WITH DISPOSABLE FILTER BAGS 190
Z1183-FC SOLIDS INTERCEPTOR WITH FLUSH COVER 191
Z1184 BOTTOM ACCESS SOLIDS INTERCEPTOR 192
Z1185 LINT INTERCEPTOR 193
OIL INTERCEPTORS – GENERAL PRODUCT INFORMATION 194
OIL INTERCEPTORS – APPLICATION INDEX 194
Z1186 OIL INTERCEPTOR 195
Z1186-ST OIL INTERCEPTOR WITH INTEGRAL STORAGE TANK 196
Z1187 SAND AND SEDIMENT INTERCEPTOR 197
Z1187-SI SAND INTERCEPTOR 198
Z1188 LARGE CAPACITY OIL INTERCEPTOR 199
Z1188-ST LARGE CAPACITY OIL INTERCEPTOR WITH INTEGRAL STORAGE TANK 200
Z1189 OIL/SEDIMENT INTERCEPTOR WITH HEAVY-DUTY GRATE 201
Z1194 OIL LEVEL SENSOR RETROFIT KIT 202
Z1196 OIL INTERCEPTOR WITH OIL LEVEL SENSOR 203
Z1198 LARGE CAPACITY OIL INTERCEPTOR WITH OIL LEVEL SENSOR 204
Z1198-ST LARGE CAPACITY OIL INTERCEPTOR WITH INTEGRAL STORAGE TANK AND OIL LEVEL FLOAT SENSOR 205

INTERCEPTORS – GENERAL INFORMATION

Zurn manufactures three types of interceptors to meet all your plumbing needs: grease interceptors, solids interceptors, and oil interceptors. Zurn interceptors are designed for use in plumbing wastewater systems to prevent harmful or undesirable substances from entering the waste-water control system. Note: Interceptors are not pressurized vessels and should not undergo pressure testing.

To obtain more detailed information on Zurn interceptors, phone 855-ONE-ZURN, or contact your local Zurn sales representative.

INTERCEPTORS – APPLICATION INDEX

Product selection should be made with a specific application and the type of construction in mind. The varied types and sizes of Zurn interceptors, along with their options, offer a selection for all applications.

APPLICATION	RECOMMENDED INTERCEPTOR
Cooking and Processing Kettles*; Pot, Pan, and Scullery Sinks	Z250H, Z1165, Z1170, Z1170-UN, ZS1170, Z1171, Z1171-TD, Z1172, Z1172-UN, Z1173, Z1173-TD, Z1174, Z1199
Soup Kettles*	Z1165, Z1170, Z1170-UN, ZS1170, Z1171, Z1171-TD, Z1173, Z1173-TD, Z1174, Z1199
Dishwashing Machines*	Z250H, Z1165, Z1170, Z1170-UN, ZS1170, Z1172, Z1172-UN, Z1173, Z1173-TD, Z1174, Z1199
Grease Draw-off Units	Z250H, Z1171-TD, Z1173, Z1173-TD, Z1199
Miscellaneous Equipment Holding*, Grease-Laden Water	Z250H, Z1165, Z1170, Z1170-UN, ZS1170, Z1171, Z1171-TD, Z1172, Z1172-UN, Z1173, Z1173-TD, Z1174

*A Zurn Solids Interceptor is recommended to be used in conjunction with all grease interceptors. See product information for details.

GREASE INTERCEPTORS – PURPOSE

For over a hundred years, grease interceptors have been used in plumbing wastewater systems to permit free flow of drainage from sinks and similar equipment. They have played an important role in preventing grease accumulations from clogging waste pipes and sewer lines. They also help to improve operations at wastewater treatment facilities and prevent environmental problems caused by grease.

Zurn engineers were part of the original team that developed the current Plumbing and Drainage Institute Standard PDI-G101, which was first issued in 1949. PDI-G101 is now cited in numerous codes, as well as in Military Specification MIL-T-18361. Many Zurn grease interceptors comply with PDI-G101 and carry the PDI label.

WHY ARE GREASE INTERCEPTORS NEEDED?

1. To prevent waste pipes in buildings from becoming clogged.
2. To prevent sewer lines from clogging and improve operation of water treatment plants by reducing the wastewater grease load from entering the plant.
3. To prevent environmental problems caused by grease mixed with other debris at landfills and in waterways.
4. To promote the recycling of recovered clean grease.

Grease entering the wastewater collection system presents major problems from the moment of entry and continuing to the final stage in wastewater treatment. It is an expensive burden in sewer pipes due to blockage and reduced capacity, causing the need for frequent cleaning. In severe cases, entire lengths of sewer pipe must be replaced due to solidification of the grease and other debris. Grease also causes substantial problems in wastewater treatment facilities because of its detrimental effect on the bacterial process of wastewater treatment. Not only is there a grease removal problem, but large quantities of grease can overload and compromise the digestive process, adversely affecting the operation of the wastewater treatment plant.

Another important reason for grease interception and recovery is for recycling. Grease, if recovered and purified (free of contaminants and water) can be turned into a valuable resource. Recovered grease can be used in the manufacturing of fertilizers, soaps, animal feed, cosmetics, and components of explosives such as nitroglycerine.

**Regularly furnished unless otherwise specified.*
Items designated as Best Sellers are most specified and are generally in stock for shipment.

Four factors are critical to the proper operation of a grease interceptor: design, sizing, proper installation, and maintenance.

DESIGN

What makes Zurn interceptors most efficient are superior design characteristics (Diagram A).

Standard Zurn units are provided with a high inlet which allows all flow to empty into the interceptor. This keeps inlet lines from becoming clogged with grease buildup, which occurs with low inlet units and with large concrete separators buried outside. Because the static water level is maintained at the bottom of the outlet, any piping into the interceptor below this elevation will remain filled with water.

The Zurn solid vertical baffle plate immediately diffuses flow and channels the incoming fluids directly to the bottom of the separation chamber. A flow directing plate on the outlet side of the vertical baffle enhances flow in an upward direction and traps solids that may inadvertently enter the interceptor. This provides the maximum amount of time possible for separation to occur. Grease being approximately 90% of the weight of water, separates and floats to the top of the water under these conditions. The calming effect on the flow and the extended time sequence in the chamber allows for more efficient separation (Diagram A).

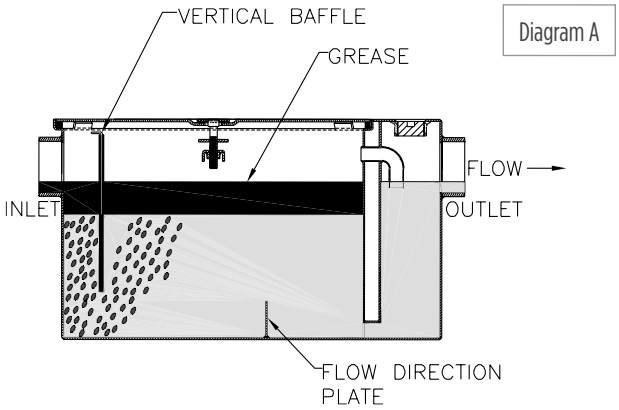

Diagram A

Zurn interceptors have an unobstructed separation chamber permitting the entire baffle to be lifted upward and removed. This provides for fast, easy cleaning which minimizes the amount of time the lid is off and the contents are exposed to the environment.

Odor from accumulated grease in an interceptor may pass back through the piping system and through the drain opening. An additional trap should be considered between the fixture and interceptor. Consult local codes.

Zurn interceptors are manufactured standard with a removable cleanout plug on the outlet side of the separation chamber, past the integral trap seal. This allows for quick, easy access to the outlet drainage pipe, should an obstruction or blockage occur downstream of the interceptor.

Zurn 1100 Series Interceptors are 100% steel construction, coated with a white acid-resisting epoxy (A.R.C.). Zurn Series Interceptors with flow rates from 4 to 50 GPM are certified by the Plumbing and Drainage Institute (PDI). Zurn Grease Interceptors with flow rates from 20 to 50 GPM are listed by the International Association of Plumbing and Mechanical Officials (IAPMO).

SIZING

The Plumbing and Drainage Institute (PDI) as well as some national and local codes have recognized different ways of sizing grease interceptors. It is advisable to check with local authorities for sizing requirements in your particular locality.

The following pages outline the most widely used sizing methods along with some common variables which, if present, could adversely affect the operation of your grease interceptor. If any of the following variables are present, added care should be taken to select the proper size interceptor with appropriate options to compensate for each irregularity.

VARIABLES AFFECTING GREASE INTERCEPTOR PERFORMANCE

VELOCITY OF INCOMING WATER

A higher velocity of water will contribute to a more turbulent

mixture. This will slow the grease separation process, thereby reducing efficiency.

Recommended Solution – Maximize incoming pipe size to lower flow velocity or install additional flow control fittings at all sources of flow.

RATIO OF GREASE TO THE WATER

The higher the ratio of grease particles to the water, the lower the efficiency of the interceptor.

Recommended Solution – Increase the size of the interceptor.

SPECIFIC GRAVITY (WEIGHT) OF THE FILTRATES

Grease has a lower specific gravity than water and will rise to the surface quickly. Grease-laden food particles, having a higher specific gravity than water, will linger and accumulate at the bottom, eventually passing out of the interceptor.

Recommended Solution – Install a solids interceptor at the source of solid particles, prior to the grease interceptor.

POSSIBLE PRESENCE OF DETERGENTS IN THE SYSTEM

Grease-cutting detergents will break the liquid grease into minute particles that can cause these liquids to pass through the interceptor.

Recommended Solution – Minimize the use of detergents, or increase the size of the interceptor.

PERCENTAGE OF MAXIMUM FLOW CAPACITY

If the maximum recommended flow is exceeded, the efficiency of the interceptor will decrease considerably.

Recommended Solution – Increase size of the interceptor to accommodate the increased flow, or install additional flow control fittings at all sources of flow.

LOCATION OF GREASE INTERCEPTOR

The interceptor should be located as close as possible to the source of grease. Waste pipes leading to the grease interceptor may become clogged if liquid cools prior to entering the grease interceptor.

Z250H FOG-CEPTOR® INTERCEPTOR

Patented

U.S. PATENT #5,746,912
CDN PATENT #2,195,822

IAMPO Approved

ENGINEERING SPECIFICATION

Zurn Z250H FOG-ceptor is engineered fiberglass, fats, oil, and grease interceptor, and dual manway interceptor with external flow control device. PDI and IAPMO rated at 100 gpm and 200 lb. Regularly furnished with 4" Schedule 40 PVC inlet and outlet. Includes two 20" diameter H-20 rated fiberglass bolted and gasketed frames and covers, four tubes of Sikaflex® bonding agent, one external flow control device, and two 3' high x 20" diameter extension collars.

NOTES

Location of outlet from bottom of interceptor cannot be changed.

PREFIXES	DESCRIPTION	SIZE	LIST PRICE
Z250H	Fiberglass Reinforced Plastic (Engineered Fiberglass)	250	**POA**
SUFFIXES			**ADD**
–EXT-B	3' long 20" diameter extension collar with bell (2) for deeper burial (additional)		**POA**
–FC	Frame and Cover (additional)		**POA**
BEST SELLER			**LIST PRICE**
Z250H			**POA**

Size	Inlet/ Outlet inch [mm]	Flow Rate gpm [LPM]	Capacity			Approximate Weight lb [kg]
			Water gallon [L]	Grease gallon [L]	Solids gallon [L]	
250	4 [102]	100 [379]	250 [946]	189 [715]	48 [182]	230 [104]

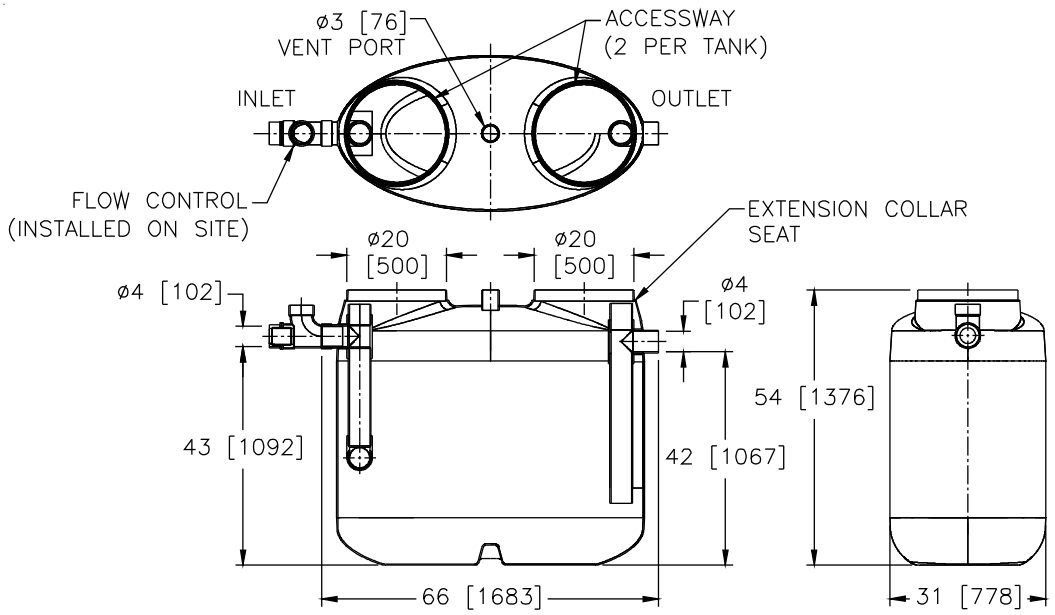

**Regularly furnished unless otherwise specified.*
Items designated as Best Sellers are most specified and are generally in stock for shipment.

Z1165 100 PPM GREASE INTERCEPTOR SYSTEM WITH SOLIDS INTERCEPTOR

Patented

ENGINEERING SPECIFICATION

Zurn Z1165 grease interceptor system features acid resistant coated interior and fabricated steel exterior, PDI rated at ____ gpm and ____ lb grease capacity, internal air relief bypass, bronze cleanout plug, removable pressure equalizing/ flow-diffusing inlet baffle, fixed bottom outlet baffle, and visible double wall trap seal. Gasketed, non-skid, secured cover completes tie down assembly with Z1108 flow control fitting. Includes acid resistant coated fabricated steel solids interceptor with replaceable filter bags, retainer plate, latched lid, and removable sediment basket. Grease interceptor effluent efficiency meets 100 parts per million when tested to EPA 1664 test method. Results based on the influent requirements in accordance with the maximum rated capacity given by Plumbing and Drainage Institute Standard PDI-G101. The presence of solids particles may cause results to vary per application.

NOTES

Location of inlet and outlet from bottom of interceptor cannot be changed.

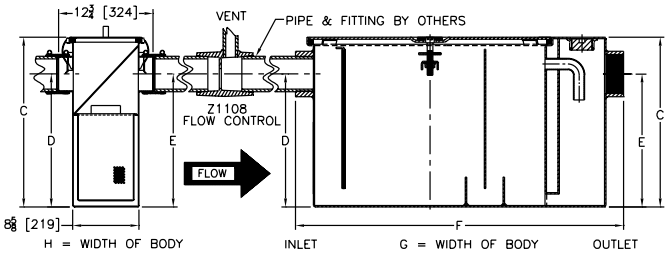

PREFIXES	DESCRIPTION	SIZE	LIST PRICE
Z1165*	Acid Resistant Coated Fabricated Steel	200	7,421.00
		300	8,334.00
		400	10,271.00
		500	13,556.00
		600	27,389.00
		700	30,870.00
		800	31,897.00
ZS1165	All Type 304 Fabricated Stainless Steel		POA

SUFFIXES		SIZE	ADD
–AL	Aluminum Cover	200-500	1,900.00
		600-800	POA

			EA. ADDITIONAL 1″ OVER 6″	UP TO 6″
–E	Acid Resistant Coated interior and exterior fabricated steel extension section (specify 'C' dimension required) for recessed installation.	200	292.00	4,703.00
		300	333.00	4,638.00
		400	365.00	5,621.00
		500	422.00	6,077.00
		600	333.00	4,638.00
		700	365.00	5,621.00
		800	422.00	6,077.00

		SIZE	ADD
–HD	Heavy Duty Cover rated at 10,000 lbs. maximum safe live load. A 3″ minimum extension height is required when Heavy Duty Cover option (-HD) is specified.	200	6,778.00
		300	7,160.00
		400	7,911.00
		500	8,285.00
		600	8,749.00
		700	12,038.00
		800	13,209.00

SUFFIXES		SIZE	ADD
–K	Anchor flange 1-3/4″ down from top and 2″ wide. A 3″ minimum extension height is required when anchor flange (–K) option is specified (specify 'C' dimension required).	200	1,542.00
		300	1,605.00
		400	1,687.00
		500	1,719.00
		600	2,009.00
		700	2,248.00
		800	2,694.00
–KC	Anchor flange 1-3/4″ down from top and 2″ wide with clamp collar. A 3″ minimum extension height is required when anchor flange (–KC) option is specified.	200	1,719.00
		300	1,917.00
		400	1,990.00
		500	2,264.00
		600	3,651.00
		700	4,084.00
		800	4,453.00
–L	Angle type (Z1108-L) flow control device with plunger		N/C
–LS	Less Solids Interceptor		POA
–PW	Plug Wrench		83.00
–R	Acid resistant coated interior and exterior fabricated steel recessing receiver for recessed installation is equipped with adjustable support brackets and gasketed non-skid cover with removable lift handles. Only available with sizes 200-700.	200	7,850.00
		300	8,054.00
		400	8,408.00
		500	8,881.00
		600	-
		700	-
–RE	Acid resistant coated interior and exterior fabricated steel recessing receiver (enclosed type) for recessed installation. Furnished with adjustable support brackets and gasketed, non-skid, secured cover with removable lift handles. Only available with sizes 200-700.	200	9,375.00
		300	9,697.00
		400	10,566.00
		500	11,128.00
		600	POA
		700	POA
–SI	Solids Interceptor Only (Specify required size.)		POA
–T	Cover recessed for tile/terrazzo. A 3″ minimum extension height is required. (Specify 'C' dimension and required recess depth: 1/8″, 3/4″, or 1-1/4″.)	200	6,927.00
		300	8,007.00
		400	9,827.00
		500	13,656.00
		600	-
		700	-
		800	-
–XF	Extra Supply of 30 Solids Filter Bags		POA

Size	Inlet/ Outlet inch [mm]	Flow Rate gpm [LPM]	Capacity Water gallon [L]	Capacity Grease lb [kg]	Approximate Weight lb [kg]	Dimensions in inches [mm] C	D/E	F	G	H
200	3 [76]	7 [26]	16 [61]	14 [6]	136 [62]	15 [381]	11-3/4 [298]	29 [737]	17-1/4 [438]	17-1/4 [438]
300		10 [38]	21 [79]	20 [9]	169 [77]	17 [432]	12-7/16 [316]	31-1/4 [794]	19-7/8 [505]	19-7/8 [505]
400		15 [57]	30 [114]	30 [14]	204 [93]	18-3/4 [476]	14-3/16 [360]	33-1/8 [841]	22-1/2 [572]	22-1/2 [572]
500		20 [76]	40 [151]	40 [18]	239 [108]	21-1/2 [546]	16 [406]	35 [889]	24-1/2 [622]	
600		25 [95]	65 [246]	50 [23]	379 [172]	25-1/4 [641]	20 [508]	36 [914]	28-5/8 [727]	
700		35 [132]	110 [416]	70 [32]	476 [216]	28 [711]	23 [584]	42-3/4 [1086]	33-5/8 [854]	
800		50 [189]	150 [568]	100 [45]	823 [373]	30-1/8 [765]	24-1/2 [622]	47-1/2 [1207]	40 [1016]	

*Regularly furnished unless otherwise specified.

Items designated as Best Sellers are most specified and are generally in stock for shipment.

Z1170 GREASE INTERCEPTOR

Sizes 500-800

ENGINEERING SPECIFICATION

Zurn Z1170 grease interceptor features acid resistant coated interior and fabricated steel exterior, PDI rated at ____ gpm and ____lb grease capacity, internal air relief bypass, bronze cleanout plug, removable pressure equalizing/ flow-diffusing inlet baffle, fixed bottom outlet baffle, and visible double wall trap seal. Gasketed, non-skid, secured cover comes complete with center tie down assembly with Z1108 flow control fitting. Regularly furnished with a high inlet and outlet connection.

NOTES

Location of outlet from bottom of interceptor cannot be changed.

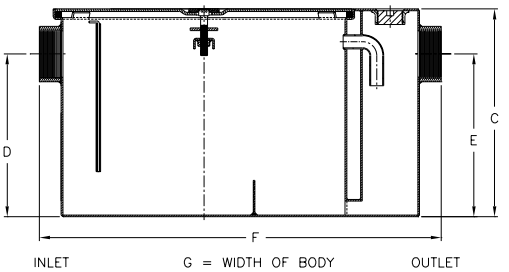

PREFIXES	DESCRIPTION	SIZE	LIST PRICE
Z1170*	Acid Resistant Coated Fabricated Steel	100	2,515.00
		200	3,486.00
		300	4,101.00
		400	6,071.00
		500	7,429.00
		600	8,348.00
		700	10,317.00
		800	13,662.00

SUFFIXES		SIZE	ADD
–AL	Aluminum Cover	100-400	1,356.00
		500-800	1,900.00
–DI	Dual High/Low Inlet		403.00

			EA. ADDITIONAL 1" OVER 6"	UP TO 6"
–E	Acid Resistant Coated interior and exterior fabricated steel extension section (specify 'C' dimension required) for recessed installation.	100	-	-
		200	-	-
		300	230.00	4,578.00
		400	259.00	4,703.00
		500	292.00	4,703.00
		600	333.00	4,638.00
		700	365.00	5,621.00
		800	422.00	6,077.00

		SIZE	ADD
–HD	Heavy duty traffic cover rated at 10,000 lbs. maximum safe live load. A 3" minimum extension height is required when Heavy Duty Cover (-HD) option is specified.	300	7,157.00
		400	7,911.00
		500	8,285.00
		600	8,749.00
		700	12,038.00
		800	13,209.00
–K	Anchor flange 1-3/4" down from top and 2" wide. A 3" minimum extension height is required when anchor flange (–K) option is specified (specify 'C' dimension required).	100	-
		200	-
		300	1,429.00
		400	1,429.00
		500	1,542.00
		600	1,605.00
		700	1,687.00
		800	1,719.00

SUFFIXES		SIZE	ADD
–KC	Anchor flange 1-3/4" down from top and 2" wide with clamp collar. A 3" minimum extension height is required when anchor flange (–KC) option is specified.	100	-
		200	-
		300	1,719.00
		400	1,719.00
		500	1,719.00
		600	1,917.00
		700	1,990.00
		800	2,264.00
–L	Angle type (Z1108-L) flow control device with plunger		N/C
–PW	Plug Wrench		83.00
–R	Acid resistant coated interior and exterior fabricated steel recessing receiver for recessed installation is equipped with adjustable support brackets and gasketed non-skid cover with removable lift handles.	100	5,772.00
		200	6,611.00
		300	6,890.00
		400	7,376.00
		500	7,850.00
		600	8,054.00
		700	8,015.00
		800	8,881.00
–RE	Acid resistant coated interior and exterior fabricated steel recessing receiver enclosed type for recessed installation. Furnished with adjustable support brackets and gasketed, non-skid, secured cover with removable lift handles.	100	6,600.00
		200	7,623.00
		300	7,985.00
		400	8,699.00
		500	9,375.00
		600	9,697.00
		700	10,566.00
		800	11,128.00
–T	Cover recessed for tile/terrazzo. A 3" minimum extension height is required. (Specify 'C' dimension and required recess depth: 1/8", 3/4", or 1-1/4".)	100	-
		200	-
		300	5,108.00
		400	6,195.00
		500	6,927.00
		600	8,007.00
		700	9,827.00
		800	13,656.00

BEST SELLERS	LIST PRICE
Z1170-300-2IP	4,101.00
Z1170-600-3IP	8,348.00
Z1170-700-3IP	10,317.00
Z1170-700-3NH	10,317.00
Z1170-800-3IP	13,662.00
Z1170-800-4IP	13,662.00

**Regularly furnished unless otherwise specified.*
Items designated as Best Sellers are most specified and are generally in stock for shipment.

Size	Inlet/ Outlet inch [mm]	Flow Rate gpm [LPM]	Capacity Water gallon [L]	Capacity Grease lb [kg]	Approximate Weight lb [kg]	Dimensions in inches [mm] C	D/E	F	G
100	2 [51]	4 [15]	3 [11]	8 [4]	42 [19]	10 [254]	7-1/4 [184]	20-3/8 [518]	9-7/8 [251]
200		7 [26]	5 [19]	14 [6]	53 [24]	11-1/4 [286]	8-1/8 [206]	21-3/4 [552]	11-7/8 [302]
300		10 [38]	6 [23]	20 [9]	66 [30]	11-3/4 [298]	8-1/4 [210]	25-1/8 [638]	14 [356]
400	3 [76]	15 [57]	10 [38]	30 [14]	83 [38]	13-3/8 [340]	9-3/8 [238]	27-1/8 [689]	16-3/4 [425]
500		20 [76]	16 [61]	40 [18]	99 [45]	15 [381]	11-3/4 [298]	30 [762]	17-1/4 [438]
600		25 [95]	21 [79]	50 [23]	124 [56]	17 [432]	12-1/2 [318]	32-1/4 [819]	19-7/8 [505]
700		35 [132]	30 [114]	70 [32]	151 [68]	18-3/4 [476]	14-1/4 [362]	34-1/8 [867]	22-1/2 [572]
800		50 [189]	40 [151]	100 [45]	180 [82]	21-1/2 [546]	16 [406]	36 [914]	24-1/2 [622]

Z1170-UN GREASE INTERCEPTOR WITH USER NOTIFICATION SYSTEM

ENGINEERING SPECIFICATION

Zurn Z1170-UN grease interceptor features acid resistant coated interior and fabricated steel exterior, rated at ____ gpm and ____lb grease capacity, internal air relief bypass, bronze cleanout plug, removable pressure equalizing/ flow-diffusing inlet baffle, fixed bottom outlet baffle, and visible double wall trap seal. Gasketed, non-skid, secured cover comes complete with center tie down assembly and Z1108 flow control fitting. Includes encased fiberglass sensor box containing an electronic grease level sensor and a fiberglass display box with green power light, red grease level light, audio alarm, and junction box. Regularly furnished with a high inlet and outlet connection.

NOTES

1. Location of outlet from bottom of interceptor cannot be changed.
2. Factory installed sensor box is mounted on the left- or right-hand side of the unit when facing inlet (must be specified).
3. Power supply 120V GFCI.

RECOMMENDED INSTALLATIONS

Sitting on the floor or recessed in a pit only. (A pit installation requires that a drain or sump pump be installed to keep the pit relatively dry.)

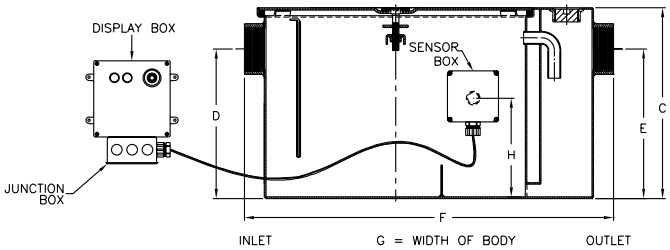

PREFIXES	DESCRIPTION		LIST PRICE
Z1170-UN*	Acid Resistant Coated Fabricated Steel		POA
ZS1170-UN	All Type 304 Fabricated Stainless Steel		POA
SUFFIXES		**SIZE**	**ADD**
–AL	Aluminum Cover	400	1,356.00
		500-800	1,900.00
–L	Angle Type (Z1108-L) Flow Control Device with Plunger		N/C
–PW	Plug Wrench		83.00

Size	Inlet/ Outlet inch [mm]	Flow Rate gpm [LPM]	Capacity		Approximate Weight lb [kg]	Dimensions in inches [mm]				
			Water gallon [L]	Grease lb [kg]		C	D/E	F	G	H
400	3 [76]	15 [57]	10 [38]	30 [14]	83 [38]	13-3/8 [340]	9-3/8 [238]	27-1/8 [689]	16-3/4 [425]	5-11/16 [144]
500		20 [76]	16 [61]	40 [18]	99 [45]	15 [381]	11-3/4 [298]	30 [762]	17-1/4 [438]	7-3/4 [197]
600		25 [95]	21 [79]	50 [23]	124 [56]	17 [432]	12-1/2 [318]	32-1/4 [819]	19-7/8 [505]	8-1/2 [216]
700		35 [132]	30 [114]	70 [32]	151 [68]	18-3/4 [476]	14-1/4 [362]	34-1/8 [867]	22-1/2 [572]	9-7/8 [251]
800		50 [189]	40 [151]	100 [45]	180 [82]	21-1/2 [546]	16 [406]	36 [914]	24-1/2 [622]	11 [279]

**Regularly furnished unless otherwise specified.*
Items designated as Best Sellers are most specified and are generally in stock for shipment.

ZS1170 GREASE INTERCEPTOR STAINLESS STEEL

Sizes 500-800

ENGINEERING SPECIFICATION

Zurn ZS1170 all type 304 grease interceptor features fabricated stainless steel, PDI rated at ____ gpm and ____lb grease capacity, internal air relief bypass, bronze, and visible double wall trap seal with removable combination pressure equalizing/flow-diffusing baffle and sediment tray. Gasketed, non-skid, secured cover comes complete with Z1108 flow control fitting. Regularly furnished inlet and outlet in high position.

NOTES

Location of outlet from bottom of interceptor cannot be changed.

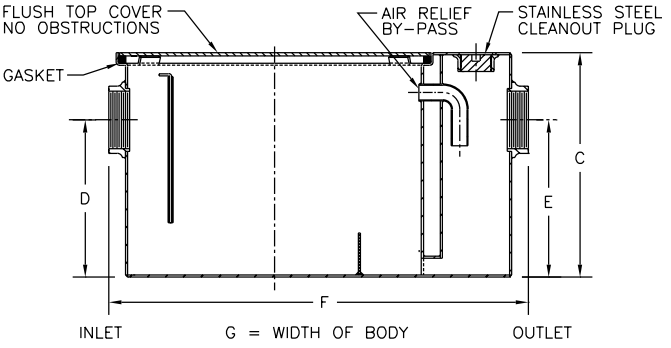

PREFIXES	DESCRIPTION	SIZE	LIST PRICE
ZS1170*	All Type 304 Fabricated Stainless Steel	100	6,283.00
		200	8,722.00
		300	10,245.00
		400	15,177.00
		500	18,574.00
		600	20,864.00
		700	25,789.00
		800	34,152.00

SUFFIXES			ADD
–DI	Dual High/Low Inlet		403.00

		SIZE	EA. ADDITIONAL 1″ OVER 6″	UP TO 6″
–E	Fabricated stainless steel extension section (specify 'C' dimension required) for recessed installation.	100	-	-
		200	-	-
		300	569.00	11,442.00
		400	643.00	11,755.00
		500	724.00	11,755.00
		600	821.00	12,531.00
		700	909.00	14,049.00
		800	1,060.00	15,196.00

		SIZE	ADD
–HD	Heavy duty traffic cover rated at 10,000 lbs. maximum safe live load. A 3″ minimum extension height is required when Heavy Duty Cover (-HD) option is specified.	100	12,357.00
		200	13,840.00
		300	14,876.00
		400	16,007.00
		500	16,946.00
		600	17,890.00
		700	19,771.00
		800	20,716.00
–K	Anchor flange 1-3/4″ down from top and 2″ wide. A 3″ minimum extension height is required when anchor flange (–K) option is specified (specify 'C' dimension required).	100	-
		200	-
		300	3,574.00
		400	3,574.00
		500	3,849.00
		600	4,018.00
		700	4,207.00
		800	4,299.00

SUFFIXES		SIZE	ADD
–KC	Anchor flange 1-3/4″ down from top and 2″ wide with clamp collar. A 3″ minimum extension height is required when anchor flange (–KC) option is specified.	100	-
		200	-
		300	4,299.00
		400	4,299.00
		500	4,299.00
		600	4,785.00
		700	5,164.00
		800	5,659.00
–L	Angle type (Z1108-L) flow control device with plunger (Acid Resistant Coated cast iron)		N/C
–R	Fabricated stainless steel recessing receiver for recessed installation is equipped with adjustable support brackets and gasketed, non-skid, secured cover with removable lift handles.	100	14,426.00
		200	16,524.00
		300	17,219.00
		400	18,434.00
		500	19,624.00
		600	20,128.00
		700	21,018.00
		800	22,200.00
–RE	Fabricated stainless steel recessing receiver enclosed type for recessed installation. Furnished with adjustable support brackets and gasketed, non-skid, secured cover with removable lift handles.	100	16,496.00
		200	19,056.00
		300	19,962.00
		400	21,739.00
		500	23,427.00
		600	24,232.00
		700	26,409.00
		800	27,824.00
–T	Cover recessed for tile/ terrazzo. A 3″ minimum extension height is required. (Specify 'C' dimension and required recess depth: 1/8″, 3/4″, or 1-1/4″.)	100	-
		200	-
		300	5,108.00
		400	6,195.00
		500	6,927.00
		600	8,007.00
		700	9,827.00
		800	13,656.00

BEST SELLERS	LIST PRICE
ZS1170-500-3IP	18,574.00
ZS1170-800-3IP	34,152.00

Size	Inlet/Outlet inch [mm]	Flow Rate gpm [LPM]	Capacity Water gallon [L]	Capacity Grease lb [kg]	Approximate Weight lb [kg]	Dimensions in inches [mm] C	D/E	F	G
100	2 [51]	4 [15]	3 [11]	8 [4]	42 [19]	10 [254]	7-1/4 [184]	20-3/8 [518]	9-7/8 [251]
200		7 [26]	5 [19]	14 [6]	53 [24]	11-1/4 [286]	8-1/8 [206]	21-3/4 [552]	11-7/8 [302]
300		10 [38]	6 [23]	20 [9]	66 [30]	11-3/4 [298]	8-1/4 [210]	25-1/8 [638]	14 [356]
400	3 [76]	15 [57]	10 [38]	30 [14]	83 [38]	13-3/8 [340]	9-3/8 [238]	27-1/8 [689]	16-3/4 [425]
500		20 [76]	16 [61]	40 [18]	99 [45]	15 [381]	11-3/4 [298]	30 [762]	17-1/4 [438]
600		25 [95]	21 [79]	50 [23]	124 [56]	17 [432]	12-1/2 [318]	32-1/4 [819]	19-7/8 [505]
700		35 [132]	30 [114]	70 [32]	151 [68]	18-3/4 [476]	14-1/4 [362]	34-1/8 [867]	22-1/2 [572]
800		50 [189]	40 [151]	100 [45]	180 [82]	21-1/2 [546]	16 [406]	36 [914]	24-1/2 [622]

For additional product information, please visit www.zurn.com

**Regularly furnished unless otherwise specified.*

Items designated as Best Sellers are most specified and are generally in stock for shipment.

Z1171 LOW PROFILE GREASE INTERCEPTOR

ENGINEERING SPECIFICATION

Zurn Z1171 low profile grease interceptor features acid resistant coated interior and fabricated steel exterior, PDI rated at ____gpm and ____lb grease capacity, internal air relief bypass, bronze cleanout plug, removable pressure equalizing/ flow-diffusing inlet baffle, fixed bottom outlet baffle, and visible double wall trap seal. Gasketed, non-skid, secured cover comes complete with center tie down assembly and Z1108 flow control fitting. Regularly furnished with 3" low inlet and outlet.*

CAUTION

Solids should not be permitted to enter a grease interceptor. Where solids are present, use a Zurn Z1183 or Z1183-DF solids interceptor (see pages 196 and 197). Installations using indirect piping to unit could result in standing water in floor sink or flooding if line blockage occurs. Interceptors must be maintained periodically in order to ensure proper operation of the system. Follow cleaning schedule based on usage.

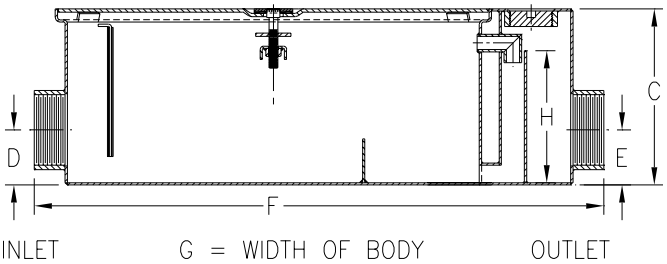

PREFIXES	DESCRIPTION	SIZE	LIST PRICE
Z1171*	Acid Resistant Coated Fabricated Steel	500	10,018.00
		700	12,898.00
		800	21,854.00
ZS1171	All Type 304 Fabricated Stainless Steel		POA
SUFFIXES	**DESCRIPTION**		**ADD**
–L	Angle Type (Z1108-L) Flow Control Device with Plunger		N/C
–PW	Plug Wrench		83.00

BEST SELLERS	LIST PRICE
Z1171-500-3IP	10,018.00
ZS1171-500-3IP	POA
Z1171-700-3IP	12,898.00
ZS1171-700-3IP	POA
Z1171-800-3IP	21,854.00
Z1171-800-4IP	21,854.00

Size	Inlet/Outlet inch [mm]	Flow Rate gpm [LPM]	Capacity		Approximate Weight lb [kg]	Dimensions in inches [mm]				
			Water gallon [L]	Grease lb [kg]		C	D/E	F	G	H
500	3 [76]	20 [76]	15 [57]	40 [18]	102 [46]	10 [254]	3-1/8 [79]	32-3/8 [822]	20-3/4 [527]	6-3/4 [171]
700		35 [132]	30 [114]	70 [32]	172 [78]	10-3/4 [273]	3-5/16 [84]	43-1/2 [1105]	29 [737]	7 [178]
800		50 [189]	45 [170]	100 [45]	210 [95]	16 [406]	10 [254]	49-7/8 [1267]		10 [254]

*Regularly furnished unless otherwise specified.

Items designated as Best Sellers are most specified and are generally in stock for shipment.

Z1171-TD LOW PROFILE GREASE INTERCEPTOR WITH ACCUMULATING CONE AND FLOW CONTROL TEE

ENGINEERING SPECIFICATION

Zurn Z1171-TD low profile grease interceptor features acid resistant coated interior and fabricated steel exterior, PDI rated at ____gpm and ____lb grease capacity, internal air relief bypass, bronze cleanout plug, and visible double wall trap seal with removable combination pressure equalizing/flow-diffusing baffle and sediment tray. Gasketed, non-skid, secured cover comes complete with draw-off port having bronze plug, grease accumulating cone, NPT to hose adapter, 2-foot flexible hose, hose clamp, and in-line closure valve, complete with Z1108 flow control fitting. Regularly furnished with 3" low inlet and outlet.

CAUTION

Solids should not be permitted to enter a grease interceptor. Where solids are present, use a Zurn Z1183 or Z1183-DF solids interceptor (see pages 196 and 197). Installations using indirect piping to unit could result in standing water in floor sink or flooding if line blockage occurs. Interceptors must be maintained periodically in order to ensure proper operation of the system. Follow cleaning schedule based on usage.

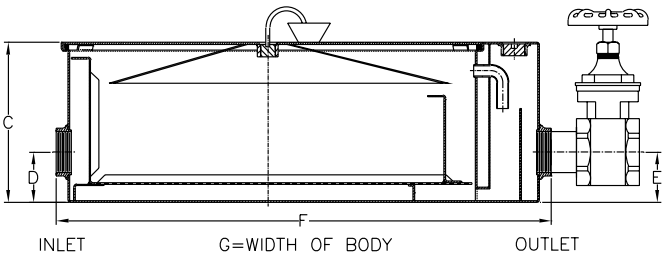

PREFIXES	DESCRIPTION	SIZE	LIST PRICE
Z1171-TD*	Acid Resistant Coated Fabricated Steel	500	16,664.00
		700	23,494.00
		800	28,819.00

SUFFIXES	DESCRIPTION	ADD
–L	Angle Type (Z1108-L) Flow Control Device with Plunger	N/C
–PW	Plug Wrench	83.00

Size	Inlet/Outlet inch [mm]	Flow Rate gpm [LPM]	Capacity		Approximate Weight lb [kg]	Dimensions in inches [mm]				
			Water gallon [L]	Grease lb [kg]		C	D/E	F	G	H
500	3 [76]	20 [76]	15 [57]	40 [18]	102 [46]	10 [254]	3-1/8 [79]	31 [787]	21-1/8 [537]	6-3/4 [171]
700		35 [132]	30 [114]	70 [32]	172 [78]	10-3/4 [273]		42-1/8 [1070]	29-3/8 [746]	7 [178]
800		50 [189]	45 [170]	100 [45]	210 [95]	16 [406]	10 [254]	49-1/2 [1257]		10 [254]

**Regularly furnished unless otherwise specified.*
Items designated as Best Sellers are most specified and are generally in stock for shipment.

Z1172 LARGE CAPACITY GREASE INTERCEPTOR

Sizes 1600-1900

Size 900

ENGINEERING SPECIFICATION

Zurn Z1172 large capacity grease interceptor features acid resistant coated interior and fabricated steel exterior, rated at ____gpm and ____lb grease capacity, internal air relief bypass, bronze cleanout plug (which can be used as a sampling port), and visible double wall trap seal with removable pressure equalizing/flow-diffusing baffle. Gasketed, non-skid, secured cover comes complete with removable lift handles, complete with flow control fitting. Regularly furnished with inlet and outlet in high position.

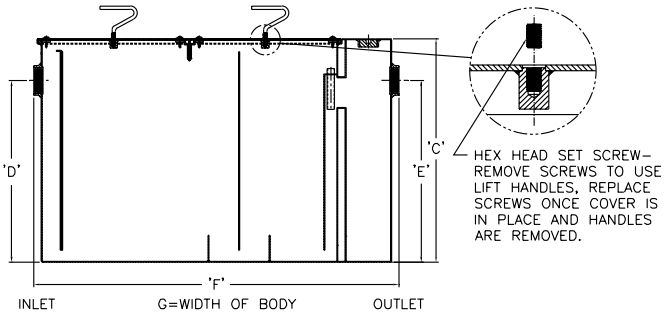

PREFIXES	DESCRIPTION	SIZE	LIST PRICE
Z1172*	Acid Resistant Coated Fabricated Steel	900	27,530.00
		1000	30,980.00
		1100	32,696.00
		1200	34,407.00
		1300	49,899.00
		1400	58,101.00
		1500	68,478.00
		1600	76,056.00
		1700	83,790.00
		1800	94,307.00
		1900	99,176.00
ZS1172	All Type 304 Fabricated Stainless Steel		POA

SUFFIXES	DESCRIPTION	ADD
–AL	Aluminum Cover	POA

		SIZE	EA. ADDITIONAL 1" OVER 10"	UP TO 10"
–E	Acid Resistant Coated interior and exterior fabricated steel extension section (specify 'C' dimension required) for recessed installation.	900	259.00	3,271.00
		1000	277.00	3,674.00
		1100	299.00	3,886.00
		1200	317.00	4,088.00
		1300	333.00	7,356.00
		1400	365.00	9,137.00
		1500	410.00	10,921.00
		1600	459.00	12,688.00
		1700	504.00	14,797.00
		1800	530.00	16,772.00
		1900	547.00	19,068.00

BEST SELLERS	LIST PRICE
Z1172-900-3IP	27,530.00
Z1172-1000-4IP	30,980.00
Z1172-1200-4IP	34,407.00
Z1172-1300-4IP	49,899.00
Z1172-1400-5IP	58,101.00
Z1172-1900-6IP	99,176.00

SUFFIXES	DESCRIPTION	SIZE	ADD
–HD	Heavy duty traffic cover rated at 10,000 lbs. maximum safe live load. A 3" minimum extension height is required when Heavy Duty Cover (-HD) option is specified.	900	8,749.00
		1000	12,038.00
		1100	13,209.00
		1200	15,457.00
		1300	17,629.00
		1400	24,332.00
		1500	31,237.00
		1600	36,834.00
		1700	42,419.00
		1800	48,472.00
		1900	51,827.00
–K	Anchor flange 1-3/4" down from top and 2" wide. A 3" minimum extension height is required when anchor flange (–K) option is specified (specify 'C' dimension required).	900	2,009.00
		1000	2,248.00
		1100	2,694.00
		1200	3,141.00
		1300	3,365.00
		1400	4,486.00
		1500	5,077.00
		1600	5,673.00
		1700	5,934.00
		1800	6,213.00
		1900	6,736.00
–KC	Anchor flange 1-3/4" down from top and 2" wide with clamp collar. A 3" minimum extension height is required when anchor flange (–KC) option is specified.	900	3,651.00
		1000	4,084.00
		1100	4,565.00
		1200	5,055.00
		1300	5,909.00
		1400	7,966.00
		1500	8,594.00
		1600	9,524.00
		1700	9,979.00
		1800	7,610.00
		1900	11,326.00
–L	Angle type (Z1108-L) flow control device with plunger		N/C
–PW	Plug Wrench		83.00
–RE	Recessing receiver enclosed type for recessed installation. Furnished with gasketed, non-skid cover with removable lift handles. (Sizes 900 & 1000 Only)		POA

Size	Inlet/ Outlet inch [mm]	Flow Rate gpm [LPM]	Capacity: Water gallon [L]	Capacity: Grease lb [kg]	No. of Covers	Approximate Weight lb [kg]	Dimensions in inches [mm]: C	D/E	F	G
900	3 [76]	75 [284]	65 [246]	150 [68]	1	316 [143]	22-3/4 [578]	18-1/2 [470]	36 [914]	28-5/8 [727]
1000		100 [379]	110 [416]	200 [91]		408 [185]	27 [686]	23 [584]	42-3/4 [1086]	33-5/8 [854]
1100		125 [473]	150 [568]	250 [113]	2	749 [340]	30-1/8 [765]	24-1/2 [622]	49-1/4 [1251]	40 [1016]
1200	4 [102]	150 [568]	195 [738]	300 [136]		856 [388]	30-3/4 [781]	25-1/4 [641]	56 [1422]	41-5/8 [1057]
1300		200 [757]	270 [1022]	400 [1881]		1016 [461]	35-1/2 [902]	29-7/8 [759]	61 [1549]	43-5/8 [1108]
1400	5 [127]	250 [946]	465 [1760]	500 [227]		1384 [628]	41 [1041]	36 [914]	71 [1803]	51-5/8 [1311]
1500		300 [1136]	665 [2517]	600 [272]		1770 [803]	46-1/4 [1175]	39-5/8 [1006]	80 [2032]	58-5/8 [1489]
1600	6 [152]	350 [1325]	865 [3274]	700 [318]		2096 [951]	50-1/2 [1283]	43-7/8 [1114]	87 [2210]	63-5/8 [1616]
1700		400 [1514]	1095 [4145]	800 [363]	3	2440 [1107]	54-1/4 [1378]	47-5/8 [1210]	94 [2388]	67 [1702]
1800		450 [1703]	1280 [4845]	900 [408]		2710 [1229]	55-1/4 [1403]	48-5/8 [1235]	100 [2540]	72 [1829]
1900		500 [1893]	1440 [5451]	1000 [454]		2857 [1296]	57-1/4 [1454]	51-5/8 [1311]	104 [2642]	74 [1880]

**Regularly furnished unless otherwise specified.*

Items designated as Best Sellers are most specified and are generally in stock for shipment.

For additional product information, please visit www.zurn.com

Z1172-UN LARGE CAPACITY GREASE INTERCEPTOR WITH USER NOTIFICATION SYSTEM

ENGINEERING SPECIFICATION

Zurn Z1172-UN Large capacity, Acid Resistant Coated interior and exterior fabricated steel grease interceptor, rated at ____gpm and ____lbs. grease capacity, with internal air relief bypass, bronze cleanout plug, and visible double wall trap seal with removable pressure equalizing/ flow-diffusing baffle. Gasketed, non-skid, secured cover with removable lift handles complete with flow control fitting. Includes encased fiberglass sensor box containing an electronic grease level sensor (specify right or left side†), a fiberglass display box with one green power light, red grease level light, audio alarm, and junction box. Regularly furnished with inlet and outlet in high position.

NOTES

1. Location of inlet/outlet from bottom of interceptor cannot be changed. Power supply 120V GFCI.
2. †Sensor box is mounted on the left- or right-hand side of the unit when facing inlet (must be specified).
3. Sizes 900 and 1000 require one cover.
4. Sizes 1100 and 1600 require two covers.
5. Sizes 1700 thru 1900 require three covers.

RECOMMENDED INSTALLATIONS

Sitting on the floor or recessed in a pit only. (A pit installation requires that a drain or sump pump be installed to keep the pit relatively dry.)

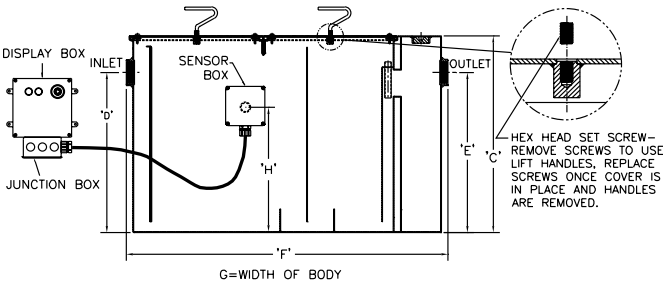

PREFIXES	DESCRIPTION	SIZE	LIST PRICE
Z1172-UN*	Acid Resistant Coated Fabricated Steel	900	39,296.00
		1000	42,746.00
		1100	44,459.00
		1200	46,176.00
		1300	61,666.00
		1400	69,869.00
		1500	80,245.00
		1600	87,822.00
		1700	95,557.00
		1800	106,078.00
		1900	110,943.00
ZS1172	All Type 304 Fabricated Stainless Steel		POA

SUFFIXES	DESCRIPTION	ADD
–AL	Aluminum Cover	POA
–L	Angle type (Z1108-L) flow control device with plunger	N/C
–PW	Plug Wrench	83.00

BEST SELLER	LIST PRICE
Z1172-UN-1100	44,459.00

Size	Inlet/Outlet inch [mm]	Flow Rate gpm [LPM]	Capacity Water gallon [L]	Capacity Grease lb [kg]	Approximate Weight lb [kg]	Dimensions in inches [mm] C	D/E	F	G	H
900	3 [76]	75 [284]	65 [246]	150 [68]	316 [143]	22-3/4 [578]	18-1/2 [470]	36 [914]	28-5/8 [727]	11-1/4 [286]
1000		100 [379]	110 [416]	200 [91]	408 [185]	27 [686]	23 [584]	42-3/4 [1086]	33-5/8 [854]	16-1/8 [410]
1100		125 [473]	150 [568]	250 [113]	749 [340]	30-1/8 [765]	24-1/2 [622]	49-1/4 [1251]	40 [1016]	16-5/16 [414]
1200	4 [102]	150 [568]	195 [738]	300 [136]	856 [388]	30-3/4 [781]	25-1/4 [641]	56 [1422]	41-5/8 [1057]	18-1/16 [459]
1300		200 [757]	270 [1022]	400 [181]	1016 [461]	35-1/2 [902]	29-7/8 [759]	61 [1549]	43-5/8 [1108]	21-7/8 [556]
1400	5 [127]	250 [946]	465 [1760]	500 [227]	1384 [628]	41 [1041]	36 [914]	71 [1803]	51-5/8 [1311]	28-9/16 [713]
1500		300 [1136]	665 [2517]	600 [272]	1770 [803]	46-1/4 [1175]	39-5/8 [1006]	80 [2032]	58-5/8 [1489]	32-1/2 [826]
1600	6 [152]	350 [1325]	865 [3274]	700 [318]	2096 [951]	50-1/2 [1283]	43-7/8 [1114]	87 [2210]	63-5/8 [1616]	35-7/8 [911]
1700		400 [1514]	1095 [4145]	800 [363]	2440 [1107]	54-1/4 [1378]	47-5/8 [1210]	94 [2388]	67 [1702]	39-3/4 [1010]
1800		450 [1703]	1280 [4845]	900 [408]	2710 [1229]	55-1/4 [1403]	48-5/8 [1235]	100 [2540]	72 [1829]	40-7/8 [1038]
1900		500 [1893]	1440 [5451]	1000 [454]	2857 [1296]	57-1/4 [1454]	51-5/8 [1311]	104 [2642]	74 [1880]	43-5/8 [1108]

**Regularly furnished unless otherwise specified.*
Items designated as Best Sellers are most specified and are generally in stock for shipment.

Z1173 EJECTO-MATIC GREASE INTERCEPTOR

Sizes 1600-1900 | Sizes 200-800

ENGINEERING SPECIFICATION

Zurn Z1173 ejecto-matic grease interceptor features acid resistant coated interior and fabricated steel exterior, PDI rated at ____gpm and ____lb grease capacity, internal air relief bypass, bronze cleanout plug, and visible double wall trap seal with removable combination pressure equalizing/flow-diffusing baffle and sediment tray and grease retention tray adjacent to grease draw-off valve. Gasketed, non-skid, secured cover comes complete with Z1108 flow control fitting. Regularly furnished with high inlet and outlet connection.

NOTES

1. Location of outlet from bottom of interceptor cannot be changed. Draw-off connection regularly furnished on outlet side.
2. On sizes #200 and #300, the grease draw-off valve is located on the left-hand side of the trap when facing the inlet, instead of on the outlet side as shown.

CAUTION

Solids should not be permitted to enter a grease interceptor.

Where solids are present, use a Zurn Z1183 or Z1183-DF solids interceptor (see pages 196 and 197).

Installations using indirect piping to unit could result in standing water in floor sink or flooding if line blockage occurs.

Interceptors must be maintained periodically in order to ensure proper operation of the system. Follow cleaning schedule based on usage.

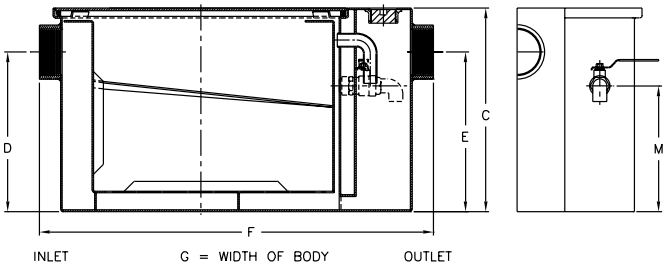

PREFIXES	DESCRIPTION	SIZE	LIST PRICE
Z1173*	Acid Resistant Coated Fabricated Steel	200	5,000.00
		300	6,622.00
		400	7,493.00
		500	9,205.00
		600	11,380.00
		700	12,751.00
		800	15,169.00
		900	18,665.00
ZS1173	All Type 304 Fabricated Stainless Steel		POA
SUFFIXES	**DESCRIPTION**	**SIZE**	**ADD**
–L	Angle type (Z1108-L) flow control device with plunger		N/C
–PW	Plug Wrench		83.00
–R	Acid Resistant Coated interior and exterior fabricated steel recessing receiver for recessed installation. Furnished with adjustable support brackets and gasketed, non-skid, secured cover with removable lift handles.	200	5,983.00
		300	6,945.00
		400	7,721.00
		500	7,842.00
		600	7,985.00
		700	8,534.00
		800	8,612.00
		900	10,471.00
–RE	Acid Resistant Coated interior and exterior fabricated steel recessing receiver enclosed type for recessed installation. Furnished with adjustable support brackets and gasketed, non-skid, secured cover with removable lift handles.	200	7,325.00
		300	8,322.00
		400	9,255.00
		500	9,569.00
		600	9,949.00
		700	10,697.00
		800	11,042.00
		900	13,581.00

BEST SELLERS	LIST PRICE
Z1173-600-2IP	11,380.00
Z1173-800-4IP-RE	26,211.00

Size	Inlet/Outlet inch [mm]	Flow Rate gpm [LPM]	Capacity		Approximate Weight lb [kg]	Dimensions in inches [mm]				
			Water gallon [L]	Grease lb [kg]		C	D/E	F	G	M C/L Valve
200	2 [51]	7 [26]	5 [19]	14 [6]	56 [25]	11-1/4 [286]	8-1/8 [206]	21-3/4 [552]	11-7/8 [302]	6-1/8 [156]
300		10 [38]	6 [23]	20 [9]	70 [32]	11-3/4 [298]	8-1/4 [210]	25-1/8 [638]	14 [356]	5-3/4 [146]
400	3 [76]	15 [57]	10 [38]	30 [14]	87 [39]	13-3/8 [340]	9-3/8 [238]	27-1/8 [689]	16-3/4 [425]	6-7/8 [175]
500		20 [76]	16 [61]	40 [18]	104 [47]	15 [381]	11-3/4 [298]	30 [762]	17-1/4 [438]	9-1/4 [235]
600		25 [95]	21 [79]	50 [23]	129 [59]	17 [432]	12-1/2 [318]	32-1/4 [819]	19-7/8 [505]	9-1/2 [241]
700		35 [132]	30 [114]	70 [32]	156 [71]	18-3/4 [476]	14-1/4 [362]	34-1/8 [867]	22-1/2 [572]	11-1/4 [286]
800		50 [189]	40 [151]	100 [45]	186 [84]	21-1/2 [546]	16 [406]	36 [914]	24-1/2 [622]	13 [330]
900		75 [284]	65 [246]	150 [68]	316 [143]	22-3/4 [578]	18-1/2 [470]		28-5/8 [727]	15-1/2 [394]

*Regularly furnished unless otherwise specified.

Items designated as Best Sellers are most specified and are generally in stock for shipment.

Z1173-TD EJECTO-MATIC GREASE INTERCEPTOR WITH GREASE ACCUMULATING CONE AND IN-LINE SHUTOFF VALVE

Sizes
200-800

ENGINEERING SPECIFICATION

Zurn Z1173-TD ejecto-matic grease interceptor features acid resistant coated interior and fabricated steel exterior, PDI rated at ____gpm and ____lb grease capacity, internal air relief bypass, bronze cleanout plug, and visible double wall trap seal with removable combination pressure equalizing/flow-diffusing baffle and sediment tray. Gasketed, non-skid, secured cover comes complete with draw-off port having a bronze plug, grease accumulating cone, NPT to hose adapter, 2-foot flexible hose, hose clamp, in-line closure valve, and Z1108 flow control fitting. Regularly furnished with high inlet and outlet connection.

NOTES

Location of outlet from bottom of interceptor cannot be changed.

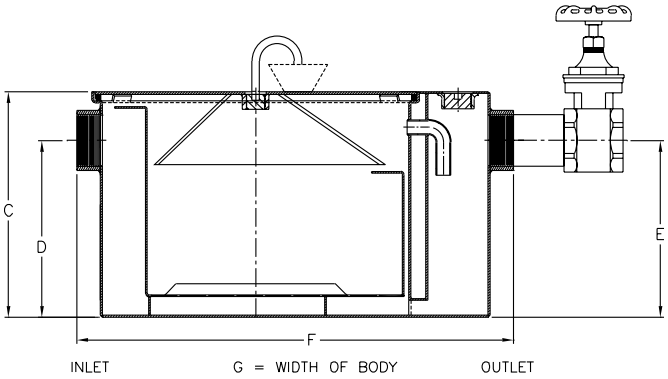

PREFIXES	DESCRIPTION	SIZE	LIST PRICE
Z1173-TD*	Acid Resistant Coated Fabricated Steel	200	8,920.00
		300	10,547.00
		400	11,238.00
		500	14,446.00
		600	16,755.00
		700	17,193.00
		800	19,630.00
		900	23,347.00

SUFFIXES	DESCRIPTION	SIZE	ADD
–L	Angle type (Z1108-L) flow control device with plunger		N/C
–PW	Plug Wrench		83.00
–R	Acid Resistant Coated interior and exterior fabricated steel recessing receiver for recessed installation. Furnished with adjustable support brackets and gasketed, non-skid, secured cover with removable lift handles.	200	7,179.00
		300	8,334.00
		400	9,260.00
		500	9,408.00
		600	9,583.00
		700	10,245.00
		800	10,339.00
		900	12,555.00
–RE	Acid Resistant Coated interior and exterior fabricated steel recessing receiver enclosed type for recessed installation. Furnished with adjustable support brackets and gasketed, non-skid, secured cover with movable lift handles.	200	8,787.00
		300	9,983.00
		400	11,103.00
		500	11,490.00
		600	11,937.00
		700	12,808.00
		800	13,246.00
		900	16,291.00

BEST SELLER	LIST PRICE
Z1173-600-4IP-TD	16,755.00

Size	Inlet/Outlet inch [mm]	Flow Rate gpm [LPM]	Capacity		Approximate Weight lb [kg]	Dimensions in inches [mm]			
			Water gallon [L]	Grease lb [kg]		C	D/E	F	G
200	2 [51]	7 [26]	5 [19]	14 [6]	56 [25]	11-1/4 [286]	8-1/8 [206]	21-3/4 [552]	11-7/8 [302]
300		10 [38]	6 [23]	20 [9]	70 [32]	11-3/4 [298]	8-1/4 [210]	25-1/8 [638]	14 [356]
400	3 [76]	15 [57]	10 [38]	30 [14]	87 [39]	13-3/8 [340]	9-3/8 [238]	27-1/8 [689]	16-3/4 [425]
500		20 [76]	16 [61]	40 [18]	104 [47]	15 [381]	11-3/4 [298]	30 [762]	17-1/4 [438]
600		25 [95]	21 [79]	50 [23]	129 [59]	17 [432]	12-1/2 [318]	32-1/4 [819]	19-7/8 [505]
700		35 [132]	30 [114]	70 [32]	156 [71]	18-3/4 [476]	14-1/4 [362]	34-1/8 [867]	22-1/2 [572]
800		50 [189]	40 [151]	100 [45]	186 [84]	21-1/2 [546]	16 [406]	36 [914]	24-1/2 [622]
900		75 [284]	65 [246]	150 [68]	316 [143]	22-3/4 [578]	18-1/2 [470]		28-5/8 [727]

**Regularly furnished unless otherwise specified.*
Items designated as Best Sellers are most specified and are generally in stock for shipment.

Z1174 GREASE EATING BACTERIA DOSING UNIT AND SOLIDS INTERCEPTOR COMBINATION

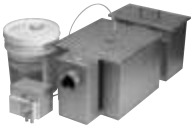

ZS1174 Shown. Z is Standard.

ENGINEERING SPECIFICATION

Zurn Z1174 grease interceptor with automatic bacteria dosing unit features acid resistant coated interior and exterior fabricated steel exterior, rated at _____ gpm and _____ lb grease capacity, internal air relief bypass, bronze cleanout plug, and visible double wall trap seal with removable pressure equalizing/flow-diffusing inlet baffle and fixed bottom outlet baffle. Gasketed, non-skid, secured cover comes complete with center tie down assembly and Z1108 flow control fitting. Furnished with Z1183 ARC solids interceptor, 110 VAC pump, pump mounting hardware, 15 feet of poly tubing and 5 gallons of grease-eating bacteria. Regularly furnished with inlet and outlet in high position.

NOTES

Location of outlet from bottom for interceptor cannot be changed.

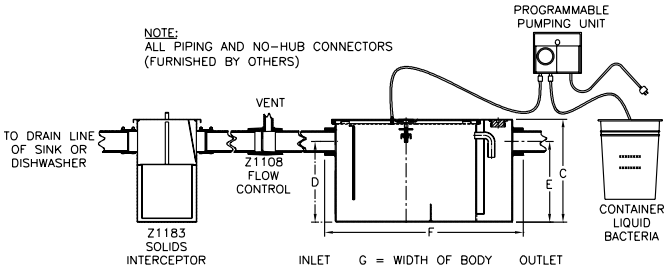

PREFIXES	DESCRIPTION	SIZE	LIST PRICE
Z1174*	Acid Resistant Coated Fabricated Steel	100	7,926.00
		200	8,377.00
		300	9,403.00
		400	10,112.00
		500	12,294.00
		600	13,845.00
		700	15,034.00
		800	17,505.00
ZS1174	All Type 304 Fabricated Stainless Steel	100	19,211.00
		200	20,942.00
		300	23,501.00
		400	25,281.00
		500	30,730.00
		600	30,846.00
		700	37,584.00
		800	43,757.00

SUFFIXES	DESCRIPTION	ADD
–CS	Custom screens (for Z1183) Specify material and perforation size required.	POA
–LS	Less Solids Interceptor	POA
–P	Pump only, 110 VAC	2,915.00
–PW	Plug Wrench	83.00
–RK	Retrofit kit, pump and bacteria (5-gal.) only	3,926.00
–YR	Replacement stainless steel basket assembly	POA
–1	One-gallon grease eating bacteria only	213.00
–5	Five-gallon grease eating bacteria only	759.00

Size	Inlet/Outlet inch [mm]	Flow Rate gpm [LPM]	Capacity		Approximate Weight lb [kg]	Dimensions in inches [mm]			
			Water gallon [L]	Grease lb [kg]		C	D/E	F	G
100	2 [51]	4 [15]	3 [11]	8 [4]	60 [27]	10 [254]	7-1/4 [184]	20-3/8 [518]	9-7/8 [251]
200		7 [26]	5 [19]	14 [6]	76 [34]	11-1/4 [286]	8-1/8 [206]	21-3/4 [552]	11-7/8 [302]
300	3 [76]	10 [38]	6 [23]	20 [9]	93 [42]	11-3/4 [298]	8-1/4 [210]	25-1/8 [638]	14 [356]
400		15 [57]	10 [38]	30 [14]	116 [53]	13-3/8 [340]	9-3/8 [238]	27-1/8 [689]	16-3/4 [425]
500		20 [76]	16 [61]	40 [18]	136 [62]	15 [381]	11-3/4 [298]	30 [762]	17-1/4 [438]
600		25 [95]	21 [79]	50 [23]	169 [77]	17 [432]	12-1/2 [318]	32-1/4 [819]	19-7/8 [505]
700		35 [132]	30 [114]	70 [32]	209 [95]	18-3/4 [476]	14-1/4 [362]	34-1/8 [867]	22-1/2 [572]
800		50 [189]	40 [151]	100 [45]	239 [108]	21-1/2 [546]	16 [406]	36 [914]	24-1/2 [622]

*Regularly furnished unless otherwise specified.

Items designated as Best Sellers are most specified and are generally in stock for shipment.

SOLIDS INTERCEPTORS – GENERAL PRODUCT INFORMATION

Zurn solids interceptors are specifically designed to capture and retain solid particles for a variety of different drain line applications. Units are available in Dura-Coated cast iron, bronze, Acid Resistant Coated steel and stainless steel, along with a multitude of screens designed for each application. If you require a solids interceptor not listed, phone 855-ONE-ZURN, or contact your local Zurn sales representative. Special screens and sizes are available to meet almost any need.

SOLIDS INTERCEPTORS – APPLICATION INDEX

Product selection should be made with a specific application and the type of construction in mind. The varied types and sizes of Zurn interceptors, along with their options, offer a selection for all applications.

APPLICATION	RECOMMENDED INTERCEPTOR
Food Preparation	Z1181, Z1182, Z1183, Z1183-DF, Z1183-FC
Hair Salons	Z1175, Z1176, Z1180, Z1184
Plaster	Z1180, Z1181
Barium	Z1180
Fish Scales	Z1181, Z1183, Z1183-FC, Z1185
Garbage Disposal	Z1181, Z1182, Z1183, Z1183-DF, Z1183-FC
Laundry, Clothes Washers	Z1185
With Z1170 and Z1173 Interceptors	Z1181, Z1182, Z1183, Z1183-DF, Z1183-FC

SOLIDS INTERCEPTORS – SIZING

All Zurn solids interceptors are designed for gravity flow where minimal head is expected. Zurn solids interceptors are designed to accommodate the flow rate of their inlet and outlet pipe size, provided they are maintained and kept clean.

Zurn solids interceptors should be sized by both expected flow rate and holding capacity. Z1185 lint interceptors must, however, be sized for the number of washing machines which they serve. Sizing for the Z1181 solids interceptor should be sized by the number and size of the sinks being served as is the case with the Z1170 grease interceptor.

Fixture Compartment Size (Inches)	Number of Compartments	Drainage Load (Gallons)	Recommended Size Solids interceptors	
			One-minute Drainage Period	Two-minute Drainage Period
18 x 12 x 6	1	4.2	7	4
16 x 14 x 8	1	5.8	7	4
20 x 18 x 8	1	9.4	10	7
18 x 16 x 8	2	15.0	15	10
20 x 18 x 8	2	18.7	20	10
30 x 20 x 8	1	15.5	20	10
24 x 20 x 12	1	18.7	20	10
22 x 20 x 8	2	23.0	25	15
22 x 20 x 12	2	34.0	35	20
24 x 24 x 12	2	44.9	50	25

**Regularly furnished unless otherwise specified.*
Items designated as Best Sellers are most specified and are generally in stock for shipment.

Z1175 HAIR INTERCEPTOR

ENGINEERING SPECIFICATION

Zurn Z1175 Dura-Coated cast iron hair and solids interceptor, in lieu of fixture "P" trap, with 1-1/2" slip joint elbow inlet and 1-1/2" threaded side outlet, perforated stainless steel basket, removable from bottom, with flanged and gasketed, slotted cleanout cover with raised head. Perforation size is 1/8".

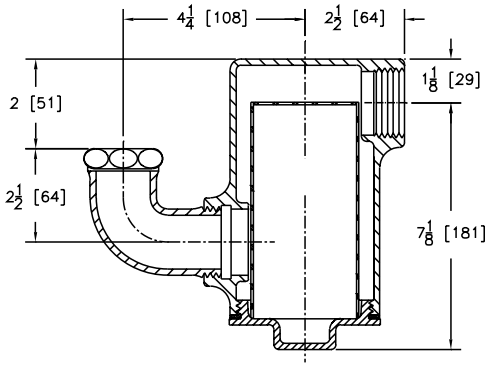

Inlet/Outlet inch [mm]	Approximate Weight lb [kg]
1-1/2 [38]	8 [4]

PREFIXES	DESCRIPTION	LIST PRICE
Z1175*	Standard Assembly (See Engineering Specification)	946.00
ZAB1175	All Satin Finish	1,734.00
SUFFIXES	**DESCRIPTION**	**ADD**
–CP	Chrome Plated Finish Interior and Exterior (ZAB Only)	579.00
–YR	Replacement Stainless Steel Basket	285.00
BEST SELLER		**LIST PRICE**
Z1175-1-1/2IP		946.00

Z1176 HAIR INTERCEPTOR

ENGINEERING SPECIFICATION

Zurn Z1176 hair and solids interceptor works in lieu of fixture "P" trap. Features Dura-Coated cast iron construction, 1-1/2" slip joint elbow inlet and 1-1/2" threaded swivel elbow top outlet, perforated stainless steel basket, removable from bottom, and flanged and gasketed cleanout cover with raised head. Perforation size is 1/8".

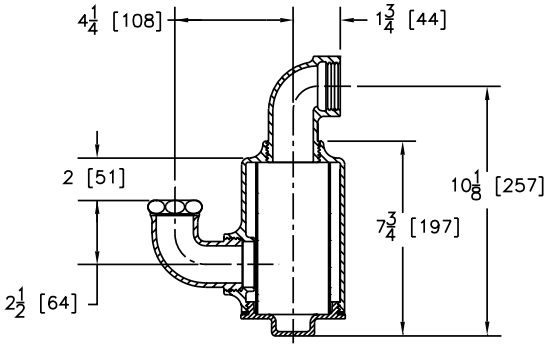

Inlet/Outlet inch [mm]	Approximate Weight lb [kg]
1-1/2 [38]	8 [4]

PREFIXES	DESCRIPTION	LIST PRICE
Z1176*	Standard Assembly (See Engineering Specification)	1,320.00
ZAB1176	All Satin Finish	2,096.00
SUFFIXES	**DESCRIPTION**	**ADD**
–CP	Chrome Plated Finish Interior and Exterior (ZAB Only)	648.00
–YR	Replacement Stainless Steel Basket	285.00
BEST SELLER		**LIST PRICE**
Z1176-1-1/2IP		1,320.00

**Regularly furnished unless otherwise specified.*

Items designated as Best Sellers are most specified and are generally in stock for shipment.

Z1180 SOLIDS INTERCEPTOR

ENGINEERING SPECIFICATION

Zurn Z1180 solids interceptor works in lieu of fixture "P" trap. Features acid resistant composite, on-floor installation, removable PVC sediment bucket with a removable 3/32" diameter perforated flow defusing/intercepting PVC screen, top access, gasketed, secured cover, stainless steel draw latches and hardware with an ABS handle for easy removal of sediment bucket and screen.

NOTES

†Regularly furnished with 2" threaded low inlet and high outlet.

CAUTION

Interceptors must be maintained periodically in order to ensure proper operation of the system. Follow cleaning schedule based on usage.

Inlet/Outlet inch [mm]	Flow Rate gpm [LPM]	Approximate Weight lb [kg]
1-1/2 [38], 2 [51]†	15 [57]	6 [3]

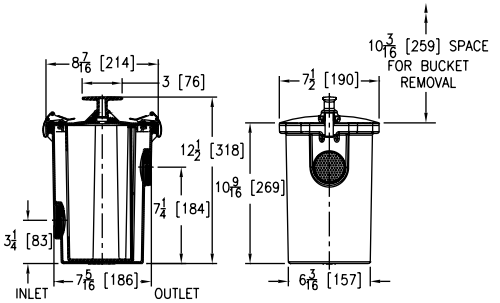

PREFIXES	DESCRIPTION	LIST PRICE
Z1180*	Standard Assembly (See Engineering Specification)	1,422.00
ZA1180	Acid Resistant Coated Fabricated Steel (Design different than what is shown.)	2,345.00
SUFFIXES	**DESCRIPTION**	**ADD**
–CS	Custom Screens (Specify material and perforation size required.)	POA
–RS	Replacement 3/32" Diameter Perforated Screen for Bucket	299.00
–SS	Stainless Steel 3/32" Diameter Perforated Screen for Bucket	446.00
–Y	Replacement Bucket Assembly with 3/32" Diameter Perforated Screen	576.00

BEST SELLERS	LIST PRICE
Z1180-1-1/2IP	1,422.00
Z1180-1-1/2-SS	1,868.00
Z1180-2IP	1,422.00
Z1180-2IP-SS	1,868.00
ZA1180-2IP	2,345.00
ZA1180-2IP-SS	2,791.00

Z1181 SOLIDS INTERCEPTOR

ENGINEERING SPECIFICATION

Zurn Z1181 solids interceptor features large capacity, acid resistant coated interior and fabricated steel exterior. Works in lieu of fixture "P" trap for on-floor or flush with floor installation. Furnished with a removable, acid resistant coated fabricated steel bucket with removable primary (3/8" diameter holes) and secondary (3/32" diameter holes) flow diffusing/intercepting brass screens, and complete with a top access, gasketed, secured cover.

NOTES

†Regularly furnished with 2" threaded low inlet and high outlet.

CAUTION

Interceptors must be maintained periodically in order to ensure proper operation of the system. Follow cleaning schedule based on usage.

A Inlet/Outlet inch [mm]	B	Flow Rate gpm [LPM]	Approximate Weight lb [kg]
1-1/2 [38], 2 [51]†	13-1/2 [343]	30 [114]	40 [18]
3 [76]	13 [330]		

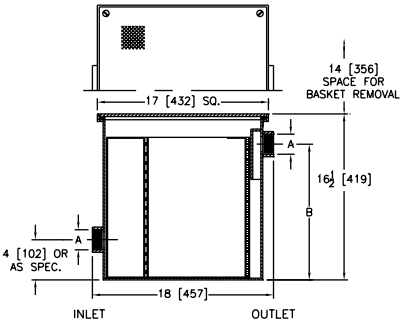

PREFIXES	DESCRIPTION	A INLET/OUTLET	LIST PRICE
Z1181*	Standard Assembly (See Engineering Specification)	1-1/2", 2"	4,969.00
		3"	5,088.00
SUFFIXES	**DESCRIPTION**	**A INLET/OUTLET**	**ADD**
–CS	Custom Screens (Specify material and perforation size required.)		POA
–R	Acid Resistant Coated Interior and Exterior Fabricated Steel Recessing Receiver for Recessed Installation is Equipped with Adjustable Support Brackets and Gasketed, Non-Skid, secured cover with removable Lift Handle		6,890.00
–SS	Stainless Steel Perforated Screens for Bucket (Specify perforation size.)	1-1/2", 2"	803.00
		3"	922.00
–Y	Replacement Bucket Assembly with Perforated Screens	1-1/2", 2"	2,305.00
		3"	2,424.00

BEST SELLERS	LIST PRICE
Z1181-1-1/2IP	4,969.00
Z1181-2IP	4,969.00
Z1181-2IP-SS	5,772.00
Z1181-3IP	5,088.00
Z1181-3IP-R	11,978.00

**Regularly furnished unless otherwise specified.*
Items designated as Best Sellers are most specified and are generally in stock for shipment.

Z1182 SIDE ACCESS SOLIDS INTERCEPTOR

ENGINEERING SPECIFICATION

Zurn Z1182 side access solids interceptor features stainless steel construction. Ideal for suspended or under sink installations where there are height restrictions for a top removal solids interceptor. Furnished with removable sediment basket attached to a removable, gasketed, latched lid. All units have a high inlet and a low outlet on each side for right- or left-hand mounting.

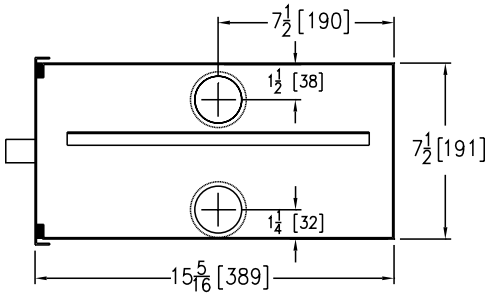

WIDTH = 11 1/2 [292]

Inlet/Outlet inch [mm]	Flow Rate gpm [LPM]
2 [51]	35 [132]

PREFIXES	DESCRIPTION	LIST PRICE
ZS1182*	All Type 304 Fabricated Stainless Steel	8,250.00
SUFFIXES	**DESCRIPTION**	**ADD**
–YR	Replacement Stainless Steel Basket Assembly	2,846.00
BEST SELLER		**LIST PRICE**
Z1182-2IP		8,250.00

Z1183 SOLIDS INTERCEPTOR

ENGINEERING SPECIFICATION

Zurn Z1183 solids interceptor features large capacity, acid resistant coated fabricated steel or stainless steel construction. Ideal for on floor or semi-recessed installation cores with screen attached to gasketed, removable, latched lid and removable sediment basket. Size to be used with corresponding Z1170, Z1172, or Z1173 grease interceptors.

CAUTION

Interceptors must be maintained periodically in order to ensure proper operation of the system. Follow cleaning schedule based on usage.

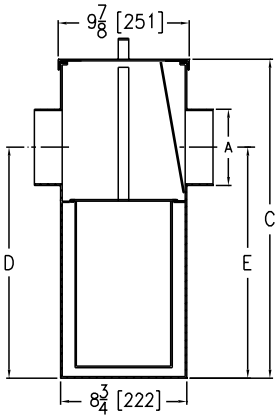

INLET G=WIDTH OF BODY OUTLET

PREFIXES	DESCRIPTION	SIZE	LIST PRICE
Z1183*	Acid Resistant Coated Fabricated Steel	100	1,946.00
		200	1,994.00
		300	2,096.00
		400	2,305.00
		500	2,494.00
		600	2,770.00
		700	2,991.00
		800	3,271.00
		900	3,613.00
ZS1183	All Type 304 Fabricated Stainless Steel	100	3,024.00
		200	3,212.00
		300	3,460.00
		400	3,900.00
		500	4,240.00
		600	4,933.00
		700	5,530.00
		800	6,230.00
		900	6,980.00
SUFFIXES	**DESCRIPTION**		**ADD**
–CS	Custom Screens (Specify material and perforation size required.)		POA
–YR	Replacement Stainless Steel Basket Assembly		POA
BEST SELLERS			**LIST PRICE**
Z1183-200-2NH			1,994.00
Z1183-500-3NH			2,494.00

Size	Inlet/ Outlet inch [mm]	Flow Rate gpm [LPM]	Solid Capacity cu ft [cm3]	Dimensions in inches [mm]			Approximate Weight lb [kg]
				C	D/E	G	
100	2 [51]	4 [15]	0.20 [.006]	10 [254]	7-1/4 [184]	9-7/8 [251]	18 [8]
200		7 [26]	0.29 [.008]	11-1/8 [283]	8-1/8 [206]	11-7/8 [302]	23 [10]
300	3 [76]	10 [38]	0.33 [.009]	11-3/4 [298]	8-1/4 [210]	14 [356]	27 [12]
400		15 [57]	0.38 [.011]	13-3/8 [340]	9-3/8 [238]	16-3/4 [425]	33 [15]
500		20 [76]	0.66 [.019]	15 [381]	11-3/4 [298]	17-1/4 [438]	37 [17]
600	4 [102]	25 [95]	0.79 [.022]	17 [432]	12-7/16 [316]	19-7/8 [506]	45 [20]
700		35 [132]	1.17 [.033]	18-3/4 [476]	14-3/16 [360]	22-1/2 [572]	53 [24]
800		50 [189]	1.35 [.038]	21-1/2 [546]	16 [406]		59 [27]
900		75 [284]	1.61 [.046]	22-3/4 [578]	18-1/2 [470]		63 [29]

*Regularly furnished unless otherwise specified.

Items designated as Best Sellers are most specified and are generally in stock for shipment.

Z1183-DF SOLIDS INTERCEPTOR WITH DISPOSABLE FILTER BAGS

ENGINEERING SPECIFICATION

Zurn Z1183-DF solids interceptor features acid resistant coated fabricated steel or stainless steel. Ideal for on floor or semi-recessed installation with replaceable filter bags, retainer plate, latched lid, and removable sediment basket. Size to be used with corresponding Z1170 grease interceptor.

CAUTION

Interceptors must be maintained periodically in order to ensure proper operation of the system. Follow cleaning schedule based on usage.

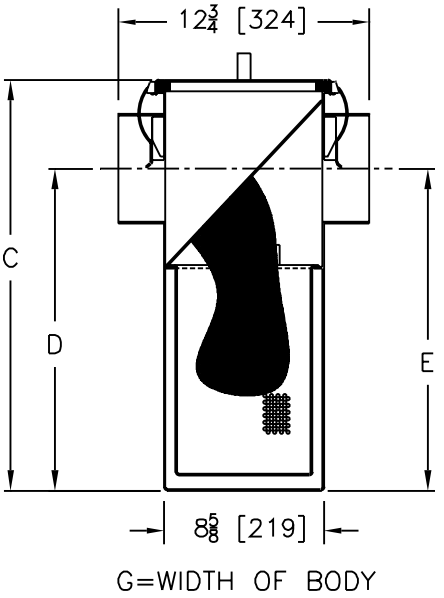

PREFIXES	DESCRIPTION	SIZE	LIST PRICE
Z1183-DF*	Acid Resistant Coated Fabricated Steel	100	4,110.00
		200	4,215.00
		300	4,427.00
		400	4,869.00
		500	5,269.00
		600	5,843.00
		700	6,323.00
		800	6,911.00
		900	7,628.00
ZS1183-DF	All Type 304 Fabricated Stainless Steel	100	6,388.00
		200	6,785.00
		300	7,310.00
		400	8,244.00
		500	8,956.00
		600	10,430.00
		700	11,685.00
		800	13,163.00
		900	14,739.00

SUFFIXES	DESCRIPTION	SIZE	ADD
–XB	Extra Solids Interceptor Basket		POA
–XF	Extra Supply of 30 Solids Filter Bags		1,328.00

Size	Inlet/Outlet inch [mm]	Flow Rate gpm [LPM]	Solid Capacity cu ft [cm3]	Dimensions in inches [mm]		
				C	D/E	G
100	2 [51]	4 [15]	0.20 [.006]	10 [254]	7-1/4 [184]	9-7/8 [251]
200		7 [26]	0.29 [.008]	11-1/8 [283]	8-1/8 [206]	11-7/8 [302]
300	3 [76]	10 [38]	0.33 [.009]	11-3/4 [298]	8-1/4 [210]	14 [356]
400		15 [57]	0.38 [.011]	13-3/8 [340]	9-3/8 [238]	16-3/4 [425]
500		20 [76]	0.66 [.019]	15 [381]	11-3/4 [298]	17-1/4 [438]
600	4 [102]	25 [95]	0.79 [.022]	17 [432]	12-7/16 [316]	19-7/8 [505]
700		35 [132]	1.17 [.033]	18-3/4 [476]	14-3/16 [360]	22-1/2 [572]
800		50 [189]	1.35 [.038]	21-1/2 [546]	16 [406]	
900		75 [284]	1.61 [.046]	22-3/4 [578]	18-1/2 [470]	

**Regularly furnished unless otherwise specified.*
Items designated as Best Sellers are most specified and are generally in stock for shipment.

Z1183-FC SOLIDS INTERCEPTOR WITH FLUSH COVER

ENGINEERING SPECIFICATION

Zurn Z1183-FC solids interceptor features large capacity, acid resistant coated interior and exterior fabricated steel or stainless steel solids. Ideal for recessed installation with screen attached to gasketed, non-skid secured cover with removable lift handle and removable sediment basket. Size to be used with corresponding Z1170, Z1172, or Z1173 grease interceptors.

CAUTION

Interceptors must be maintained periodically in order to ensure proper operation of the system. Follow cleaning schedule based on usage.

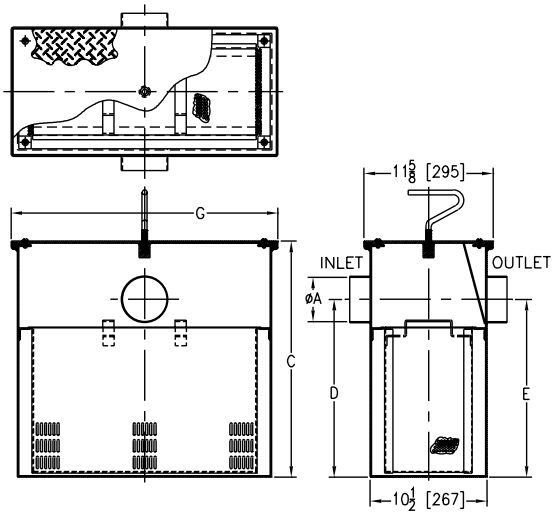

PREFIXES	DESCRIPTION	SIZE	LIST PRICE
Z1183-FC*	Acid Resistant Coated Fabricated Steel	100	2,803.00
		200	2,851.00
		300	2,952.00
		400	3,157.00
		500	3,343.00
		600	3,612.00
		700	3,832.00
		800	4,107.00
		900	4,442.00
		1000	4,552.00
		1100	4,700.00
		1200	4,795.00
ZS1183-FC	Type 304 Fabricated Stainless Steel	100	3,863.00
		200	4,048.00
		300	4,289.00
		400	4,722.00
		500	5,056.00
		600	5,739.00
		700	6,325.00
		800	7,007.00
		900	7,749.00
		1000	7,956.00
		1100	8,274.00
		1200	8,523.00

SUFFIXES	DESCRIPTION	ADD
–CS	Custom Screens (Specify material and perforation size required.)	POA
–E	Acid Resistant Coated Interior and Exterior Fabricated Steel Extension Section	POA
–YR	Replacement Stainless Steel Bucket Assembly	POA

Size	Inlet/Outlet inch [mm]	Flow Rate gpm [LPM]	Solid Capacity cu ft [cm3]	Dimensions in inches [mm]		
				C	D/E	G
100	2 [51]	4 [15]	0.20 [.006]	10 [254]	7-1/4 [184]	11-3/4 [298]
200		7 [26]	0.29 [.008]	11-1/8 [283]	8-1/8 [206]	13-3/4 [349]
300		10 [38]	0.33 [.009]	11-3/4 [298]	8-1/4 [210]	15-7/8 [403]
400	3 [76]	15 [57]	0.38 [.011]	13-3/8 [340]	9-3/8 [238]	18-5/8 [473]
500		20 [76]	0.66 [.019]	15 [381]	11-3/4 [298]	19-1/8 [486]
600		25 [95]	0.79 [.022]	17 [432]	12-7/16 [316]	21-3/4 [552]
700		35 [132]	1.17 [.033]	18-3/4 [476]	14-3/16 [360]	24-3/8 [619]
800		50 [189]	1.35 [.038]	21-1/8 [537]	16 [406]	
900		75 [284]	1.61 [.046]	22-3/4 [578]	18-1/2 [470]	
1000		100 [379]	1.80 [.051]	27 [686]	23 [584]	
1100		125 [473]	1.95 [.055]	30-1/8 [765]	24-1/2 [622]	
1200	4 [102]	150 [568]	2.11 [.060]	30-3/4 [781]	25-1/2 [648]	

**Regularly furnished unless otherwise specified.*

Items designated as Best Sellers are most specified and are generally in stock for shipment.

Z1184 BOTTOM ACCESS SOLIDS INTERCEPTOR

ENGINEERING SPECIFICATION

Zurn Z1184 bottom access solids interceptor features acid resistant composite. Works in lieu of fixture "P" trap for suspended installation. Includes removable PVC sediment bucket with a removable 3/32" diameter perforated flow defusing/intercepting PVC screen, designed to intercept all types of solids and precious metals. Bottom access gasketed, secured cover comes complete with stainless steel draw latches and hardware with an ABS combination handle and drain port plug for easy removal of sediment bucket and screen.

NOTES

†Regularly furnished with 2" threaded low inlet and high outlet.

CAUTION

Interceptors must be maintained periodically in order to ensure proper operation of the system. Follow cleaning schedule based on usage.

Inlet/Outlet inch [mm]	Flow Rate gpm [LPM]	Approximate Weight lb [kg]
1-1/2 [38], 2 [51]†	15 [57]	6 [3]

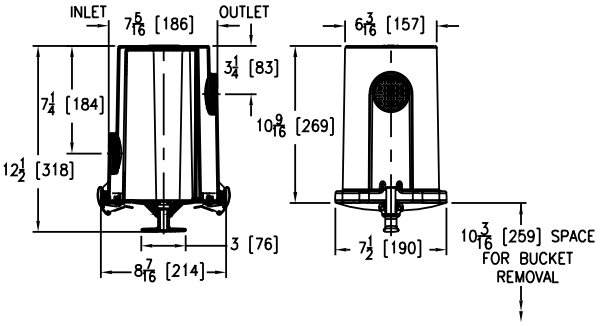

PREFIXES	DESCRIPTION	LIST PRICE
Z1184*	Standard Assembly (See Engineering Specification)	1,422.00
ZA1184	Acid Resistant Coated Fabricated Steel (Design different than what is shown.)	2,345.00
SUFFIXES	**DESCRIPTION**	**ADD**
–CS	Chrome Plated Finish Interior and Exterior (ZAB Only)	POA
–RS	Replacement 3/32" Diameter Perforated Screen for Bucket	299.00
–SS	Stainless Steel 3/32" Diameter Perforated Screen for Bucket	446.00
–Y	Replacement Bucket Assembly with 3/32" Diameter Perforated Screen	576.00
BEST SELLERS		**LIST PRICE**
Z1184-1-1/2IP		1,422.00
Z1184-2IP		1,422.00

**Regularly furnished unless otherwise specified.*
Items designated as Best Sellers are most specified and are generally in stock for shipment.

Z1185 LINT INTERCEPTOR

ENGINEERING SPECIFICATION

Zurn Z1185 lint interceptor features acid resistant coated interior and fabricated steel exterior, non-skid secured cover with removable lift handle, lint intercepting secondary screen assembly with 3/32" square openings, and permanent primary straining baffle with 3/8" diameter perforated holes. Regularly furnished with high inlet and low outlet.

NOTES

Size #3 and #7 covers are not furnished with a lift handle.

CAUTION

Interceptors must be maintained periodically in order to ensure proper operation of the system. Follow cleaning schedule based on usage.

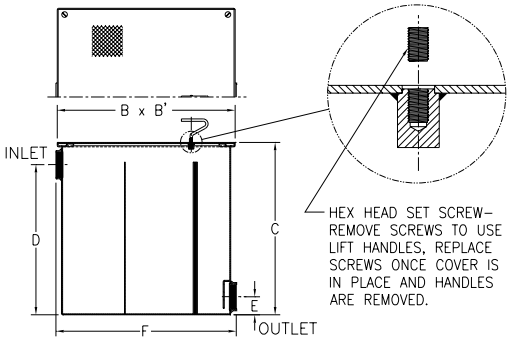

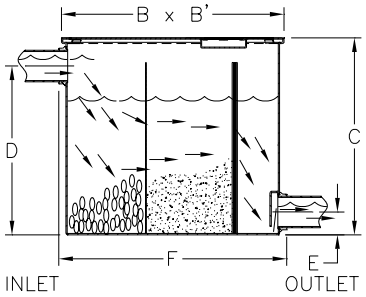

PREFIXES	DESCRIPTION	SIZE	LIST PRICE
Z1185*	Acid Resistant Coated Fabricated Steel	3	11,048.00
		7	12,857.00
		10	15,128.00
		20	18,311.00
		30	21,289.00
		40	24,270.00
		50	27,254.00
ZS1185	All Type 304 Fabricated Stainless Steel	3	POA
		7	POA
		10	POA
		20	POA
		30	POA
		40	POA
		50	POA

SUFFIXES	DESCRIPTION	SIZE	EA. ADDITIONAL 1" OVER 6"	UP TO 6"
–E	Acid Resistant Coated Interior and Exterior Fabricated Steel Extension Section (Specify 'C' dimension required for recessed installation.)	3	132.00	1,891.00
		7	132.00	1,891.00
		10	190.00	2,638.00
		20	227.00	2,638.00
		30	264.00	2,638.00
		40	301.00	2,638.00
		50	410.00	3,198.00

		SIZE	ADD
–RS	Replacement Screen Assembly	3	776.00
		7	1,084.00
		10	1,555.00
		20	1,976.00
		30	2,276.00
		40	2,436.00
		50	2,664.00

BEST SELLERS	LIST PRICE
Z1185-3-2IP	11,048.00
Z1185-3-3IP	11,048.00
Z1185-7-3IP	12,857.00
Z1185-10-4IP	15,128.00
ZS1185-30-6IP	POA

Size No. of Machines	Inlet/Outlet inch [mm]	Flow Rate gpm [LPM]	Approximate Weight lb [kg]	Dimensions in inches [mm]				
				B	C	D	E	F
3	2 [51]	30 [114]	93 [42]	17 [432]	16-1/2 [419]	13-1/2 [343]	3-1/4 [83]	17-1/4 [438]
7	3 [76]	70 [265]	155 [70]	25 [635]	20 [508]	15-3/4 [400]		25-1/2 [648]
10	4 [102]	100 [379]	271 [123]	33 [838]	28 [711]	25 [635]	4 [102]	34 [864]
20		200 [757]	404 [183]	40 [1016]	35 [889]	32 [813]		41 [1041]
30	6 [152]	300 [1136]	654 [267]	45 [1143]	40 [1016]	36 [914]	5 [127]	46 [1168]
40		400 [1514]	723 [328]	48 [1219]	43 [1092]	39 [991]		49 [1245]
50		500 [1893]	911 [413]	52 [1321]	47 [1194]	43 [1092]		53 [1346]

*Regularly furnished unless otherwise specified.

Items designated as Best Sellers are most specified and are generally in stock for shipment.

OIL INTERCEPTORS – GENERAL PRODUCT INFORMATION

Zurn oil interceptors are designed to be similar to the grease interceptors. Both work on the principle that oils are lighter than water and thus gravity causes the oil to rise and the solids to fall. Zurn oil interceptors come equipped with a removable sediment bucket on the inlet to trap stones, grit and other substances. Their perforated, flow-diffusing baffle eliminates turbulence and allows for high efficiency of separation.

All Zurn Z1186 and Z1188 oil interceptors are supplied with a specific gravity oil draw-off tube assembly. This assembly is to be set 1/8 above the static water level, per standard installation instructions. Once oil builds down to this level, the oil draws off by gravity through the tube assembly.

All Zurn oil interceptors are of 100% steel construction coated with a blue acid resisting epoxy. All Zurn oil interceptors are listed by the IAPMO. If you require an oil interceptor not listed phone 855-ONE-ZURN, or contact your local Zurn sales representative.

OIL INTERCEPTORS – APPLICATION INDEX

Product selection should be made with a specific application and the type of construction in mind. The varied types and sizes of Zurn interceptors, along with their options, offer a selection for all applications.

APPLICATION	RECOMMENDED INTERCEPTOR
Maintenance, Parking Garage, Oil Spill Areas	Z1186, Z1186-ST, Z1187, Z1187-SI, Z1188, Z1188-ST, Z1189, Z1196, Z1198, Z1198-ST
Municipal Water Systems, Wells	Z1187
Electronic Oil Level Sensors	Z1194, Z1196, Z1198, Z1198-ST

**Regularly furnished unless otherwise specified.*
Items designated as Best Sellers are most specified and are generally in stock for shipment.

Z1186 OIL INTERCEPTOR

ENGINEERING SPECIFICATION

Zurn Z1186 oil interceptor features acid resistant coated interior and fabricated steel exterior, bronze cleanout plug and visible double wall trap seal, removable combination pressure equalizing/ flow-diffusing baffle and sediment bucket, horizontal baffle, adjustable oil draw-off, and vent connections (either side). Gasketed, non-skid, secured cover comes complete with flow control fitting. Regularly furnished with inlet and outlet in high position.

NOTES

1. Location of outlet from bottom of interceptor cannot be changed.
2. †Inlet and outlet sizes shown indicate standard operating sizes and flow control settings. Size #300 and #400 will have 3" connections reduced to 2" as standard. Size #700 and #800 will have 4" connections reduced to 3" as standard.

CAUTION

Interceptors must be maintained periodically in order to ensure proper operation of the system. Follow cleaning schedule based on usage.

PREFIXES	DESCRIPTION	SIZE	LIST PRICE
Z1186*	Acid Resistant Coated Fabricated Steel	300	5,602.00
		400	7,685.00
		500	9,289.00
		600	10,089.00
		700	12,265.00
		800	16,496.00

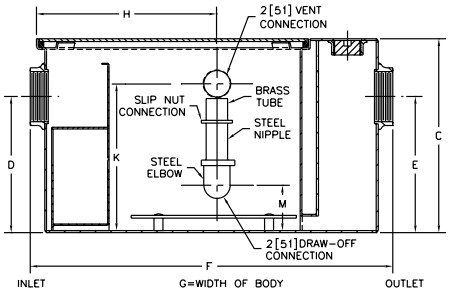

SUFFIXES	DESCRIPTION	SIZE	EA. ADDITIONAL 1" OVER 6"	ADD UP TO 6"
–E	Acid Resistant Coated Interior and Exterior Fabricated Steel Extension Section. (Specify 'C' dimension required for recessed installation.)	300	230.00	5,242.00
		400	259.00	5,310.00
		500	292.00	5,461.00
		600	333.00	5,621.00
		700	365.00	5,832.00
		800	422.00	6,960.00
		SIZE		**ADD**
–HD	Heavy duty traffic cover rated at 10,000 lbs. maximum safe live load. A 3" minimum extension height is required when Heavy Duty Cover (-HD) option is specified. (Specify 'C' dimension height required.)	300		5,954.00
		400		6,401.00
		500		6,778.00
		600		7,157.00
		700		7,911.00
		800		8,285.00
–K	Anchor flange 1-3/4" down from top and 2" wide. A 3" minimum extension height is required when anchor flange (–K) option is specified. (Specify 'C' dimension height required.) Price for –E plus –K.	300		1,429.00
		400		1,429.00
		500		1,542.00
		600		1,605.00
		700		1,687.00
		800		1,719.00
–KC	Anchor flange 1-3/4" down from top and 2" wide with clamp collar. A 3" minimum extension height is required when anchor flange (–KC) option is specified.	300		1,719.00
		400		1,719.00
		500		1,719.00
		600		1,917.00
		700		1,990.00
		800		2,264.00
–PW	Plug Wrench			83.00

BEST SELLERS	LIST PRICE
Z1186-300-2NH	5,602.00
Z1186-500-3IP	9,289.00
Z1186-600-3IP	10,089.00
Z1186-800-3IP	16,496.00

Size	Inlet/ Outlet† inch [mm]	Flow Rate gpm [LPM]	Water Capacity gallon [L]	Approximate Weight lb [kg]	Dimensions in inches [mm]						
					C	D/E	F	G	H	K	M
300	2 [51]	10 [38]	7 [26]	56 [25]	13-5/8 [346]	8-1/8 [206]	25-1/8 [638]	14 [356]	11-5/8 [295]	11 [279]	2-3/4 [70]
400		15 [57]	9 [34]	77 [35]	14 [356]	8-1/4 [210]	25-1/4 [641]	14-1/8 [359]			
500	3 [76]	20 [76]	10 [38]	106 [48]	15-1/2 [394]	9-3/8 [238]	27-1/8 [689]	16-3/4 [425]	13-1/4 [337]	12-1/2 [318]	2-1/2 [64]
600		25 [95]	16 [61]	116 [53]	18-1/4 [464]	11-3/4 [298]	30 [762]	17-1/4 [438]	16 [406]	15-1/4 [387]	4 [102]
700		35 [132]	21 [79]	140 [64]	19-3/4 [502]	12-1/2 [318]	32-1/4 [819]	19-7/8 [505]	16-3/8 [416]	16-3/4 [425]	4-11/16 [119]
800		50 [189]	30 [114]	171 [78]	24-1/4 [616]	14-1/4 [362]	34-1/8 [867]	22-1/2 [572]	17-1/4 [438]	21-1/4 [540]	6-7/16 [164]

*Regularly furnished unless otherwise specified.

Items designated as Best Sellers are most specified and are generally in stock for shipment.

Z1186-ST OIL INTERCEPTOR WITH INTEGRAL STORAGE TANK

ENGINEERING SPECIFICATION

Zurn Z1186-ST oil interceptor features acid resistant coated interior and fabricated steel exterior, bronze cleanout plug and visible double wall trap seal, removable combination pressure equalizing/flow-diffusing baffle and sediment bucket, oil draw-off, and vent connections. Secured, gasketed, non-skid cover comes complete with flow control fitting and left-hand integral storage tank. Regularly furnished with inlet and outlet in high position.

NOTES

1. Location of outlet from bottom of interceptor cannot be changed. Regularly furnished with left-hand side storage tank.
2. †Inlet and outlet sizes shown indicate standard operating sizes and flow control settings. Size #300 and #400 will have 3″ connections reduced to 2″ as standard. Size #700 and #800 will have 4″ connections reduced to 3″ as standard.

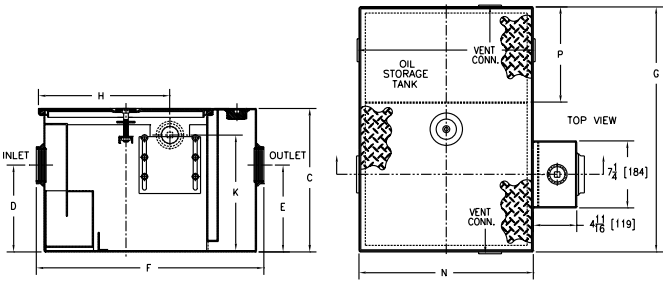

PREFIXES	DESCRIPTION	SIZE	LIST PRICE
Z1186-ST*	Acid Resistant Coated Fabricated Steel	300	8,399.00
		400	11,523.00
		500	13,932.00
		600	15,127.00
		700	18,380.00
		800	24,738.00

SUFFIXES	DESCRIPTION	SIZE	ADD EA. ADDITIONAL 1″ OVER 6″	ADD UP TO 6″
–E	Acid Resistant Coated interior and exterior fabricated steel section. (Specify 'C' dimension required for recessed installation.)	300	328.00	7,868.00
		400	399.00	7,966.00
		500	453.00	8,204.00
		600	493.00	8,424.00
		700	537.00	8,740.00
		800	633.00	10,439.00
		SIZE		ADD
–HD	Heavy duty traffic cover rated at 10,000 lbs. maximum safe live load. A 3″ [76] minimum extension height is required when anchor flange (-K) option is specified. (Specify 'C' Dim. height required.)	300		9,492.00
		400		10,083.00
		500		10,676.00
		600		11,264.00
		700		11,863.00
		800		12,469.00
–K	Anchor flange 1-3/4″ down from top and 2″ wide. A 3″ minimum extension height is required when anchor flange (–K) option is specified. (Specify 'C' dimension height required.)	300		2,137.00
		400		2,137.00
		500		2,315.00
		600		2,416.00
		700		2,512.00
		800		2,569.00
–KC	Anchor flange 1-3/4″ down from top and 2″ wide with clamp collar. Same dimensional requirements as –K. Price for –E plus –KC.	300		2,569.00
		400		2,569.00
		500		2,569.00
		600		2,864.00
		700		2,966.00
		800		3,391.00
–PW	Plug Wrench			83.00
–STR	Storage tank on right-hand side when facing the inlet.			N/C

BEST SELLERS	LIST PRICE
Z1186-ST-500-3IP	13,932.00
Z1186-ST-500-4IP	13,932.00
Z1186-ST-800-4IP	24,738.00

Size	Inlet/ Outlet† inch [mm]	Flow Rate gpm [LPM]	Water Capacity gallon [L]	Approximate Weight lb [kg]	Dimensions in inches [mm]						
					C	D/E	F	G	H	K	N
300	2 [51]	10 [38]	7 [26]	95 [43]	13-7/8 [352]	8-1/8 [206]	23-1/16 [586]	23-9/16 [598]	12-1/16 [306]	11 [279]	16-7/8 [429]
400		15 [57]	9 [34]	95 [43]	14 [356]	8-1/4 [210]					
500	3 [76]	20 [76]	10 [38]	115 [52]	15-1/2 [394]	9-3/8 [238]	25-1/16 [637]	26-1/2 [673]	14-3/16 [360]	12-1/2 [318]	18-7/8 [479]
600		25 [95]	16 [61]	280 [127]	18-1/4 [464]	11-3/4 [298]	35-7/32 [895]	50-7/8 [1292]	19-1/4 [489]	15-1/4 [387]	29 [737]
700		35 [132]	21 [79]	320 [145]	19-3/4 [502]	12-7/16 [316]	43-7/16 [1103]	45 [1143]	23-1/4 [591]	16-3/4 [425]	37 [940]
800		50 [189]	30 [114]	529 [240]	24-1/4 [616]	14-3/16 [360]	49-7/16 [1256]	70-1/8 [1781]	26-1/4 [667]	21-1/4 [540]	43 [1092]

**Regularly furnished unless otherwise specified.*
Items designated as Best Sellers are most specified and are generally in stock for shipment.

Z1187 SAND AND SEDIMENT INTERCEPTOR

ENGINEERING SPECIFICATION

Zurn Z1187 sand and sediment interceptor features acid resistant coated interior and fabricated steel exterior, _____ cu ft capacity below invert of outlet, 4″ threaded inlet and outlet, and four 2″ threaded individual vent connections complete with heavy-duty, scoriated, non-skid, removable covers.

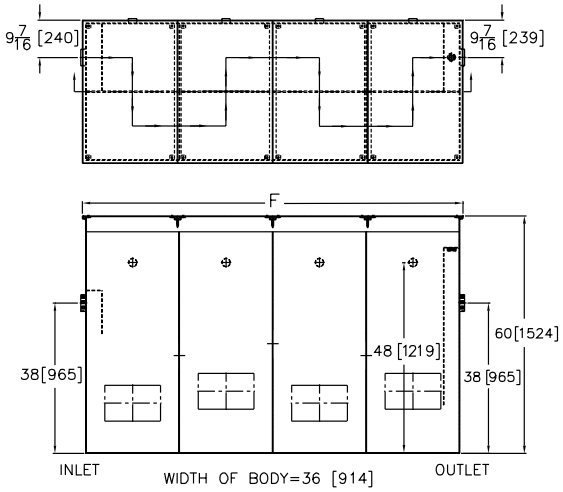

PREFIXES	DESCRIPTION	SIZE	LIST PRICE
Z1187*	Acid Resistant Coated Fabricated Steel	300	42,090.00
		400	62,083.00
		500	POA
		600	POA
		700	POA
		800	POA
		1000	POA

SUFFIXES	DESCRIPTION	SIZE	ADD EA. ADDITIONAL 1″ OVER 6″	ADD UP TO 6″
–E	Integral extension assembly for recessed installation. (Specify overall height required.)	300	200.00	1,286.00
		400	264.00	1,580.00
		500	365.00	2,276.00
		600	429.00	2,770.00
		700	461.00	3,159.00
		800	530.00	3,815.00
		1000	629.00	4,213.00

		SIZE	ADD
–HD	Heavy-duty cover rated at 10,000 lbs. maximum safe live load.	300	1,652.00
		400	2,073.00
		500	3,032.00
		600	3,457.00
		700	3,758.00
		800	4,144.00
		1000	5,198.00
–K	Anchor flange 1-3/4″ down from top and 2″ wide. No extension required to accommodate –K option.	300	1,844.00
		400	2,108.00
		500	4,213.00
		600	4,739.00
		700	5,265.00
		800	6,319.00
		1000	7,896.00

BEST SELLERS	LIST PRICE
Z1187-300-4IP	42,090.00
Z1187-400-4IP-K	64,191.00

Size	cu ft [cm3]	Approximate Weight lb [kg]	F-Dim.
300	43 [1.2]	1600 [726]	60 [1524]
400	54 [1.5]	1750 [794]	72 [1829]
500	72 [2.0]	2100 [953]	96 [2438]
600	81 [2.3]	2500 [1134]	108 [2743]
700	90 [2.5]	2700 [1225]	120 [3048]
800	108 [3.0]	3000 [1361]	144 [3658]
1000	135 [3.8]	3640 [1651]	180 [4572]

**Regularly furnished unless otherwise specified.*

Items designated as Best Sellers are most specified and are generally in stock for shipment.

Z1187-SI SAND INTERCEPTOR

ENGINEERING SPECIFICATION

Zurn Z1187-SI sand interceptor features acid resistant coated interior and fabricated steel exterior with threaded inlet and outlet complete with removable, heavy-duty grates.

NOTES

1. Location of outlet from bottom of interceptor cannot be changed.
2. Standard grating is for heavy-duty applications. The -SC option is for a heavy-duty cover.

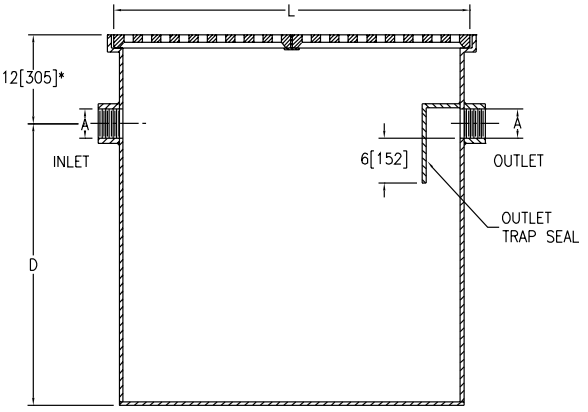

*12[305] REGULARLY FURNISHED–
SPECIFY DIMENSION IF HIGHER
OR LOWER IS REQUIRED

PREFIXES	DESCRIPTION	SIZE	LIST PRICE
Z1187-SI*	Acid Resistant Coated Fabricated Steel	20	13,821.00
		50	23,427.00
		150	70,817.00
		250	73,697.00
		500	POA

SUFFIXES	DESCRIPTION	SIZE	EA. ADDITIONAL 1" OVER 6"	UP TO 6"
–E	Integral extension assembly. (Specify extension height.)	20	148.00	838.00
		50	184.00	1,303.00
		150	343.00	2,292.00
		250	440.00	3,500.00
		500	594.00	5,944.00

		SIZE	ADD
–DG	Duresist grate (see Z793)		POA
–K	Anchor flange 1-3/4" down from top and 2" wide.		POA
–KC	Anchor flange 1-3/4" down from top and 2" wide with clamp collar.		POA
–NH	No-hub inlet and outlet (see Z1040)		N/C
–SC	Heavy-duty reinforced cover(s) rated at 10,000 lbs. maximum safe live load.	20	2,638.00
		50	5,271.00
		150	10,547.00
		250	15,840.00
		500	26,409.00
–VP	Vandal-proof screws		165.00

BEST SELLERS	LIST PRICE
Z1187-SI-20-4IP	13,821.00
Z1187-SI-20-4IP-SC	16,459.00
Z1187-SI-50-4IP	23,427.00

Size	Flow gpm [LPM] (Max.)	A Pipe Size inch [mm]	L inch [mm]	D inch [mm]	Capacity Gal. [L] (Static)	No. of 12" x 24" Grates	Width inch [mm]	Approximate Weight lb [kg]
20	20 [76]	4 [102]	24 [610]	26 [660]	60 [227]	2	24 [610]	133 [60]
50	50 [189]		48 [1219]		120 [454]	4		204 [93]
150	150 [568]			38 [965]	360 [1363]	8	48 [1219]	368 [167]
250	250 [946]	6 [152]	72 [1829]	39 [991]	540 [2044]	12		1294 [587]
500	500 [1893]		120 [3048]	51 [1295]	1200 [4542]	20		2204 [1000]

**Regularly furnished unless otherwise specified.*
Items designated as Best Sellers are most specified and are generally in stock for shipment.

Z1188 LARGE CAPACITY OIL INTERCEPTOR

ENGINEERING SPECIFICATION

Zurn Z1188 oil interceptor features large capacity, acid resistant coated interior and fabricated steel exterior, bronze cleanout plug and visible double wall trap seal, removable combination pressure equalizing/flow-diffusing baffle and sediment bucket, horizontal baffle, adjustable oil draw-off, and vent connections (either side). Complete with secured, gasketed, non-skid cover with removable lift handles and flow control fitting. Regularly furnished with inlet and outlet in high position.

CAUTION

Interceptors must be maintained periodically in order to ensure proper operation of the system. Follow cleaning schedule based on usage.

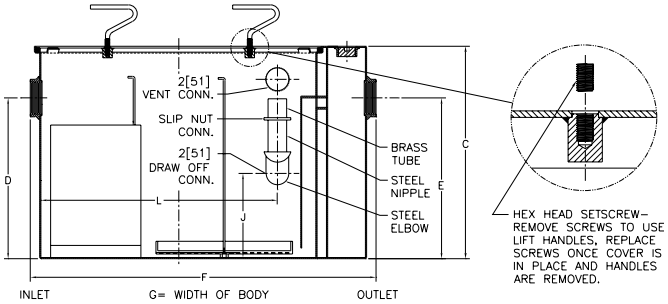

PREFIXES	DESCRIPTION	SIZE	LIST PRICE
Z1188*	Acid Resistant Coated Fabricated Steel	75	28,571.00
		100	30,980.00
		125	36,142.00
		150	38,365.00
		200	54,197.00
		250	62,761.00
		300	71,066.00
		350	79,318.00
		400	POA
		450	POA
		500	POA

SUFFIXES	DESCRIPTION	SIZE	ADD EA. ADDITIONAL 1" OVER 10"	ADD UP TO 10"
–E	Acid Resistant Coated interior and exterior fabricated steel extension section. (Specify 'C' dimension required for recessed installation.)	75	259.00	3,920.00
		100	277.00	4,088.00
		125	299.00	4,251.00
		150	317.00	4,417.00
		200	333.00	6,319.00
		250	365.00	8,214.00
		300	410.00	9,984.00
		350	459.00	11,828.00
		400	504.00	13,797.00
		450	530.00	16,102.00
		500	547.00	18,418.00

BEST SELLERS	LIST PRICE
Z1188-100-4IP	30,980.00
Z1188-125-3IP	36,142.00
Z1188-150-4IP	38,365.00
Z1188-200-4IP	54,197.00
Z1188-500-6IP	POA

SUFFIXES	DESCRIPTION	SIZE	ADD
–HD	Heavy-duty traffic cover rated at 10,000 lbs. maximum safe live load. An increased 'C' dimension is required when Heavy Duty Cover (-HD) option is specified. (See -HD Specification Sheet.)	75	8,749.00
		100	12,038.00
		125	13,209.00
		150	15,457.00
		200	17,629.00
		250	24,332.00
		300	31,237.00
		350	36,834.00
		400	42,419.00
		450	48,472.00
		500	51,827.00
–K	Anchor flange 1-3/4" down from top and 2" wide. A 3" minimum extension height is required when -K option is specified.	75	1,873.00
		100	2,096.00
		125	2,511.00
		150	2,925.00
		200	3,134.00
		250	4,187.00
		300	4,734.00
		350	5,275.00
		400	5,603.00
		450	5,934.00
		500	6,266.00
–KC	Anchor flange 1-3/4" down from top and 2" wide with clamp collar. A 3" minimum extension height is required when -KC option is specified.	75	3,393.00
		100	3,798.00
		125	4,251.00
		150	4,703.00
		200	5,498.00
		250	7,131.00
		300	8,000.00
		350	8,863.00
		400	9,419.00
		450	9,982.00
		500	10,547.00
–PW	Plug Wrench		83.00

Flow Rate gpm [LPM]	Inlet/Outlet inch [mm]	Water Capacity gallon [L]	Approximate Weight lb [kg]	No. of Covers	Dimensions in inches [mm] C	D/E	F	G	J	L
75 [284]	3 [76]	65 [246]	332 [151]	1	22-3/4 [578]	18-1/2 [470]	36 [914]	28-5/8 [727]	6-7/8 [175]	25-3/4 [654]
100 [379]		110 [416]	432 [196]		27 [686]	23 [584]	42-3/4 [1086]	33-5/8 [854]	11-3/8 [289]	30-1/8 [765]
125 [473]		150 [568]	780 [354]	2	30-1/8 [765]	24-1/2 [622]	49-1/4 [1251]	40 [1016]	12-7/8 [327]	36-5/8 [930]
150 [568]	4 [102]	190 [719]	888 [403]		30-3/4 [781]	25-1/4 [641]	56 [1422]	41-3/8 [1051]	13-1/8 [333]	43-7/8 [1114]
200 [757]		265 [1003]	1055 [479]		35-1/2 [902]	29-7/8 [759]	61 [1549]	43-5/8 [1108]	17-3/4 [451]	46-5/8 [1184]
250 [946]	5 [127]	460 [1741]	1438 [652]		41 [1041]	36 [914]	71 [1803]	51-5/8 [1311]	23-3/8 [594]	56-5/8 [1438]
300 [1136]		660 [2498]	1840 [835]		46-1/4 [1175]	39-5/8 [1006]	80 [2032]	58-3/8 [1483]	27 [686]	65-5/8 [1667]
350 [1325]	6 [152]	860 [3255]	2180 [989]		50-1/2 [1283]	43-7/8 [1114]	87 [2210]	63-5/8 [1616]	30-3/4 [781]	74-1/8 [1883]
400 [1514]		1090 [4126]	2536 [1150]	3	54-1/4 [1378]	47-5/8 [1210]	94 [2388]	67 [1702]	34-1/2 [876]	79-1/8 [2010]
450 [1703]		1275 [4826]	2816 [1277]		55-1/4 [1403]	48-5/8 [1235]	100 [2540]	72 [1829]	35-1/2 [902]	85-3/8 [2169]
500 [1893]		1435 [5432]	2970 [1347]		57-1/4 [1454]	51-5/8 [1311]	104 [2642]	74 [1880]	38-1/2 [978]	88-3/8 [2245]

*Regularly furnished unless otherwise specified.

Items designated as Best Sellers are most specified and are generally in stock for shipment.

Z1188-ST LARGE CAPACITY OIL INTERCEPTOR WITH INTEGRAL STORAGE TANK

ENGINEERING SPECIFICATION

Zurn Z1188-ST oil interceptor features acid resistant coated interior and fabricated steel exterior, bronze cleanout plug and visible double wall trap seal, removable combination pressure equalizing/flow-diffusing baffle and sediment bucket, horizontal baffle, adjustable oil draw-off, and vent connections. Secured, gasketed, non-skid cover comes complete with flow control fitting and left-hand integral storage tank. Regularly furnished with inlet and outlet in high position.

NOTES

Location of outlet from bottom of interceptor cannot be changed.

CAUTION

Interceptors must be maintained periodically in order to ensure proper operation of the system. Follow cleaning schedule based on usage.

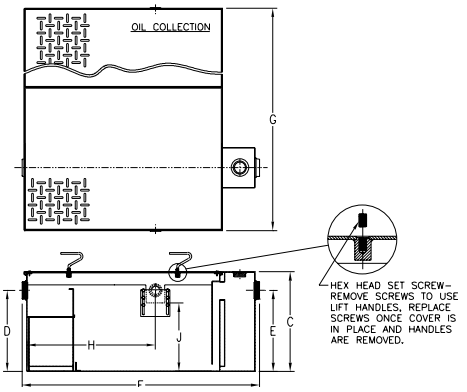

PREFIXES	DESCRIPTION	SIZE	LIST PRICE
Z1188-ST*	Acid Resistant Coated Fabricated Steel	75	42,856.00
		100	46,492.00
		125	54,172.00
		150	57,532.00
		200	81,271.00
		250	94,145.00
		300	106,601.00
		350	POA
		400	POA
		450	POA
		500	POA

SUFFIXES	DESCRIPTION	SIZE	ADD EA. ADDITIONAL 1" OVER 6"	ADD UP TO 6"
–E	Integral Acid Resistant Coated interior and exterior fabricated steel extension section. (Specify 'C' dimension required for recessed installation.)	75	399.00	5,878.00
		100	418.00	6,130.00
		125	453.00	6,387.00
		150	476.00	6,631.00
		200	493.00	9,492.00
		250	552.00	12,317.00
		300	633.00	14,989.00
		350	699.00	17,738.00
		400	756.00	20,699.00
		450	795.00	24,140.00
		500	831.00	27,638.00

BEST SELLERS	LIST PRICE
Z1188-ST-100-3IP	46,492.00
Z1188-ST-200-4IP	81,271.00
Z1188-ST-250-5IP	94,145.00
Z1188-ST-350-6NH	POA

SUFFIXES	DESCRIPTION	SIZE	ADD
–HD	Heavy-duty traffic cover rated at 10,000 lbs. maximum safe live load. An increased 'C' dimension is required when -HD option is specified. (See -HD Specification Sheet.)	75	13,106.00
		100	18,070.00
		125	19,808.00
		150	23,191.00
		200	26,454.00
		250	36,480.00
		300	46,854.00
		350	55,263.00
		400	63,621.00
		450	72,717.00
		500	77,763.00
–K	Anchor flange 1-3/4" down from top and 2" wide. A 3" minimum extension height is required when anchor flange (–K) option is specified. (Specify 'C' dimension height required and price for –E plus –K.)	75	2,827.00
		100	3,166.00
		125	3,760.00
		150	4,389.00
		200	4,685.00
		250	6,288.00
		300	7,100.00
		350	7,911.00
		400	8,399.00
		450	8,891.00
		500	9,418.00
–KC	Anchor flange 1-3/4" down from top and 2" wide with clamp collar. Same dimensional requirements as –K. Price for –E plus –KC.	75	5,108.00
		100	5,698.00
		125	6,387.00
		150	7,059.00
		200	8,246.00
		250	10,676.00
		300	12,021.00
		350	13,287.00
		400	14,022.00
		450	14,986.00
		500	15,817.00
–PW	Plug Wrench		83.00
–STR	Storage tank on right-hand side when facing the inlet.		N/C

Flow Rate gpm [LPM]	Inlet/ Outlet inch [mm]	Water Capacity gallon [L]	Oil Capacity gallon [L]	Approximate Weight lb [kg]	No. of Covers Trap	No. of Covers Tank	Dimensions in inches [mm] C	D/E	F	G	H	J
75 [284]	3 [76]	88 [333]	125 [473]	615 [279]	1	1	22-3/4 [578]	18-1/2 [470]	51-3/8 [1305]	65-3/8 [1661]	29-1/4 [743]	15-1/2 [394]
100 [379]		159 [602]	250 [946]	800 [363]			27 [686]	23 [584]	60-3/8 [1534]	82-3/8 [2092]	35-1/4 [895]	19-3/4 [502]
125 [473]		208 [787]		1450 [658]	2	2	30-1/8 [765]	24-1/2 [622]	64-1/4 [1632]	84-5/8 [2149]	36 [914]	21 [533]
150 [568]	4 [102]	235 [890]		1640 [744]			30-3/4 [781]	25-1/4 [641]	68-1/4 [1734]	82-3/4 [2102]	38-11/16 [983]	21-5/8 [549]
200 [757]		333 [1261]	400 [1514]	1950 [885]			35-1/2 [902]	29-7/8 [759]	71-3/8 [1813]	92-3/4 [2356]	43-1/2 [1105]	26-3/8 [670]
250 [946]	5 [127]	445 [1685]		2650 [1202]			41 [1041]	36 [914]	75-1/2 [1918]	95-5/8 [2429]	40-3/4 [1035]	32-1/2 [826]
300 [1136]		664 [2514]		3400 [1542]			46-1/4 [1175]	39-5/8 [1006]	82-3/8 [2092]	92-3/8 [2346]	48-1/16 [1221]	37-3/4 [959]
350 [1325]	6 [152]	1006 [3808]	700 [2650]	4000 [1814]			50-1/2 [1283]	43-7/8 [1114]	103-1/8 [2619]	104-3/4 [2661]	61-15/16 [1573]	40-3/8 [1026]
400 [1514]		1266 [3808]		4700 [2132]			54-1/4 [1378]	47-5/8 [1210]	110-1/8 [2797]	102-5/8 [2607]	66-9/16 [1691]	44-1/8 [1121]
450 [1703]		1575 [5962]		5200 [2359]			55-1/4 [1403]	48-5/8 [1235]	123-1/8 [3127]	102-7/8 [2613]	75-1/4 [1911]	44-5/8 [1133]
500 [1893]		1695 [6416]		5500 [2495]			57-1/4 [1454]	51-5/8 [1311]	124-1/8 [3153]	103-5/8 [2632]	73-15/16 [1878]	48-1/8 [1222]

For additional product information, please visit www.zurn.com

**Regularly furnished unless otherwise specified.*

Items designated as Best Sellers are most specified and are generally in stock for shipment.

Z1189 OIL/SEDIMENT INTERCEPTOR WITH HEAVY-DUTY GRATE

ENGINEERING SPECIFICATION

Zurn Z1189 oil/sediment interceptor features acid resistant coated interior and fabricated steel exterior, bronze cleanout plug and visible double wall trap seal, removable sediment bucket, horizontal baffle, internal vent connection, and Dura-Coated heavy-duty cast iron grate.

CAUTION

Interceptors must be maintained periodically in order to ensure proper operation of the system. Follow cleaning schedule based on usage.

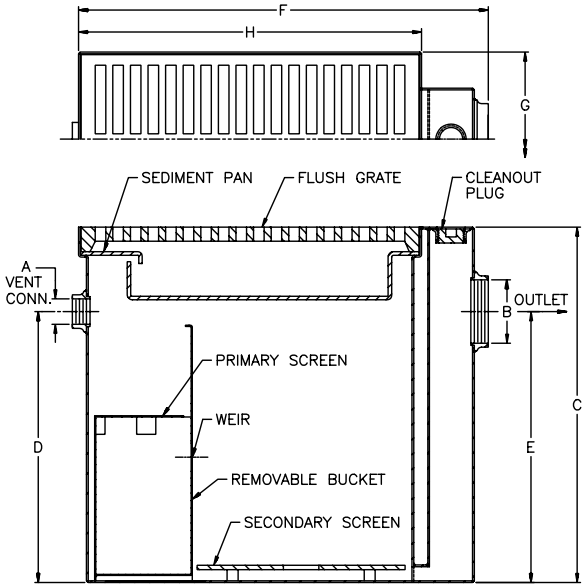

PREFIXES	DESCRIPTION	SIZE	LIST PRICE
Z1189*	Acid Resistant Coated Fabricated Steel	12	3,683.00
		60	9,932.00
		100	14,115.00
		200	20,914.00
		300	27,608.00

SUFFIXES	DESCRIPTION		ADD
–DG	Duresist Grate		1,003.00

		EA. ADDITIONAL 1″ OVER 6″	UP TO 6″
–E	Acid Resistant Coated interior and exterior fabricated steel extension section. (Specify 'C' dimension required.)	12	95.00	619.00
		60	140.00	926.00
		100	200.00	1,226.00
		200	292.00	1,844.00
		300	387.00	2,435.00

		SIZE	ADD
–K	Anchor flange 1-3/4″ down from top and 2″ wide	12	769.00
		60	1,060.00
		100	1,335.00
		200	1,754.00
		300	2,315.00
–KC	Anchor flange 1-3/4″ down from top and 2″ wide	12	1,060.00
		60	1,593.00
		100	2,009.00
		200	2,580.00
		300	3,406.00
–PW	Plug Wrench		83.00
–SC	Heavy-Duty Solid Traffic Cover (maximum safe live load 10,000 lbs.)	12	691.00
		60	1,378.00
		100	2,248.00
		200	2,994.00
		300	3,953.00

BEST SELLERS	LIST PRICE
Z1189-12-2IP	3,683.00
Z1189-60-4IP	9,932.00
Z1189-100-4IP	14,115.00
Z1189-100-4IP-DG	15,118.00

Size	Sludge Capacity lb [kg]	Grate Open Area inch [mm]	No. of Grates	No. of Pans	Approximate Weight lb [kg]	Dimensions in inches [mm]							
						A Vent Size	B Pipe Size	C	D	E	F	G	H
12	12 [5]	49 [1245]	1	1	70 [32]	-	2 [51]	15 [381]	-	10-1/2 [267]	17-1/8 [435]	11-3/8 [289]	12-3/8 [314]
60	60 [27]	131 [3327]			175 [79]	2	4 [102]	25-1/4 [641]	19-1/4 [489]	17-5/8 [448]	29-1/8 [740]	12-3/8 [314]	24-3/8 [619]
100	100 [45]	262 [6655]	2		280 [127]			33 [838]	27 [686]	22 [559]		24-3/8 [619]	
200	200 [91]	393 [9982]	3		370 [168]						41-1/8 [1045]		36-3/8 [924]
300	300 [136]	524 [13309]	4		460 [209]						53-1/8 [1349]		48-3/8 [1229]

*Regularly furnished unless otherwise specified.

Items designated as Best Sellers are most specified and are generally in stock for shipment.

Z1194 OIL LEVEL SENSOR RETROFIT KIT

ENGINEERING SPECIFICATION

Zurn Z1194 oil level sensor retrofit kit features a fiberglass sensor box containing an electronic oil level sensor and a fiberglass display box with one green power light, red oil level light, audible alarm, and junction box. Intended use for retrofit applications on Z1186 and Z1188 oil interceptors. Power supply 100 to 240 VAC at 47 to 63 Hz, GFCI.

CAUTION

Caution: Interceptor must be cleaned of solids and other debris and the sensors wiped off on a regular basis in order to ensure proper operation of the system. Z1194 TO BE USED WITH INTERCEPTORS FOR ON-THE-FLOOR INSTALLATION ONLY.

PREFIXES	DESCRIPTION	LIST PRICE
Z1194	Oil Level Sensor Retrofit Kit	11,984.00

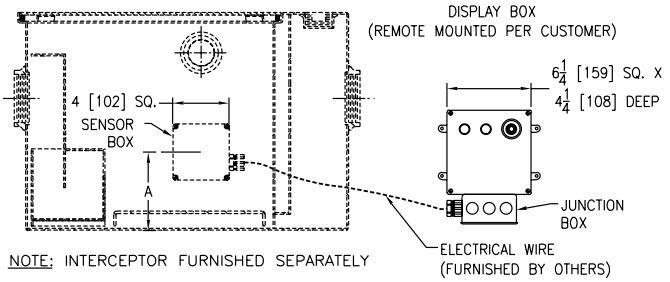

Z1186	
Flow Rate gpm [LPM]	A Dimensions inch [mm]
10 [38]	5-7/16 [138]
15 [57]	
20 [76]	6-5/8 [168]
25 [95]	7-3/4 [197]
35 [132]	
50 [189]	9-1/16 [230]

Z1188	
Flow Rate gpm [LPM]	A Dimensions inch [mm]
75 [284]	10 [254]
100 [379]	15-3/8 [391]
125 [473]	15-11/16 [398]
150 [568]	17-5/16 [440]
200 [757]	21-1/16 [535]
250 [946]	27-13/16 [706]
300 [1136]	32 [813]
350 [1325]	35-5/16 [897]
400 [1514]	39-5/16 [999]
450 [1703]	40-3/8 [1026]
500 [1893]	43-3/16 [1097]

**Regularly furnished unless otherwise specified.*
Items designated as Best Sellers are most specified and are generally in stock for shipment.

Z1196 OIL INTERCEPTOR WITH OIL LEVEL SENSOR

ENGINEERING SPECIFICATION

Zurn Z1196 oil interceptor features acid resistant coated interior and fabricated steel exterior with a fiberglass sensor box containing an electronic oil level sensor (specify right or left side†) and a fiberglass display box with one green power light, red oil level light, audible alarm and junction box. Includes bronze cleanout plug and visible double wall trap seal, removable combination pressure equalizing/flow-diffusing baffle and sediment bucket, horizontal baffle, and vent connections either side. Secured, gasketed, non-skid cover comes complete with flow control fitting. Regularly furnished with inlet and outlet in high position.

NOTES

1. †Installed sensor box is mounted on the left- or right-hand side of the unit when facing inlet (must be specified).
2. ‡Inlet and outlet sizes shown indicate standard operating sizes and flow control settings. Size #300 and #400 will have 3" connections reduced to 2" as standard. Size #700 and #800 will have 4" connections reduced to 3" as standard. If changed, flow control must be adjusted accordingly.
3. Power supply 120V GFCI.
4. Recommended Installations: Sitting on the floor or recessed in a pit only. (A pit installation requires that a drain or sump pump be installed to keep the pit relatively dry.)
5. For pit installation, see Form No. IT66.

CAUTION

Interceptors must be maintained periodically in order to ensure proper operation of the system. Follow cleaning schedule based on usage.

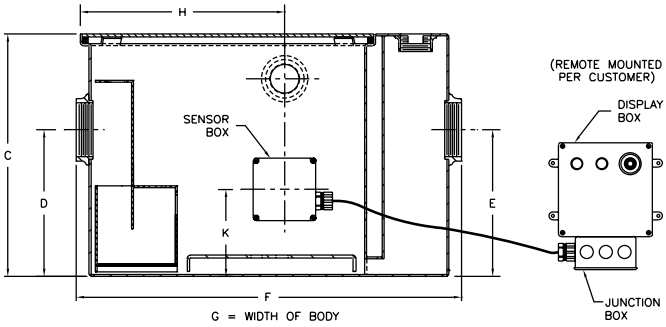

PREFIXES	DESCRIPTION	SIZE	LIST PRICE
Z1196	Acid Resistant Coated Fabricated Steel	300	18,779.00
		400	20,864.00
		500	22,469.00
		600	23,267.00
		700	25,447.00
		800	29,676.00

SUFFIXES	DESCRIPTION	ADD
–PW	Plug Wrench	83.00

Size	Inlet/ Outlet inch [mm]	Flow Rate gpm [LPM]	Water Capacity gallon [L]	Oil Capacity galon [L]	Approximate Weight lb [kg]	Dimensions in inches [mm]					
						C	D/E	F	G	H	K
300	2 [51]	10 [38]	7 [26]	1 [4]	56 [25]	13-7/8 [352]	8-1/8 [206]	25-1/8 [638]	14 [356]	11-5/8 [295]	5-7/16 [138]
400		15 [57]	9 [34]		77 [35]	14 [356]	8-1/4 [210]	25-1/4 [641]	14-1/8 [359]		
500	3 [76]	20 [76]	10 [38]	1-1/2 [6]	106 [48]	15-1/2 [394]	9-3/8 [238]	27-1/8 [689]	16-3/4 [425]	13-1/4 [337]	6-5/8 [168]
600		25 [95]	16 [61]	3-1/2 [13]	116 [53]	18-1/4 [464]	11-3/4 [298]	30 [762]	17-1/4 [438]	16 [406]	7-3/4 [197]
700		35 [132]	21 [79]	5 [19]	140 [64]	19-3/4 [502]	12-1/2 [318]	32-1/4 [819]	19-7/8 [505]	16-3/8 [416]	
800		50 [189]	30 [114]	7 [26]	171 [78]	24-1/4 [616]	14-3/16 [360]	34-1/8 [867]	22-1/2 [572]	17-1/4 [438]	9-1/16 [230]

Z1198 LARGE CAPACITY OIL INTERCEPTOR WITH OIL LEVEL SENSOR

ENGINEERING SPECIFICATION

Zurn Z1198 oil interceptor with a fiberglass sensor box containing an electronic oil level sensor (specify right or left side†) features large capacity, acid resistant coated interior and fabricated steel exterior, and a fiberglass display box with one green power light, red oil level light, audible alarm and junction box. Includes bronze cleanout plug and visible double wall trap seal, removable combination pressure equalizing/flow-diffusing baffle and sediment bucket, horizontal baffle, and vent connections either side. Secured, gasketed, non-skid cover comes complete with flow control fitting. Regularly furnished with inlet and outlet in high position.

NOTES

1. †Installed sensor box is mounted on the left- or right-hand side of the unit when facing inlet (must be specified).
2. Power supply 120V GFCI.

RECOMMENDED INSTALLATIONS

Sitting on the floor or recessed in a pit only. (A pit installation requires that a drain or sump pump be installed to keep the pit relatively dry.)
For pit installation, see Form No. IT62.

CAUTION

Interceptors must be maintained periodically in order to ensure proper operation of the system. Follow cleaning schedule based on usage.

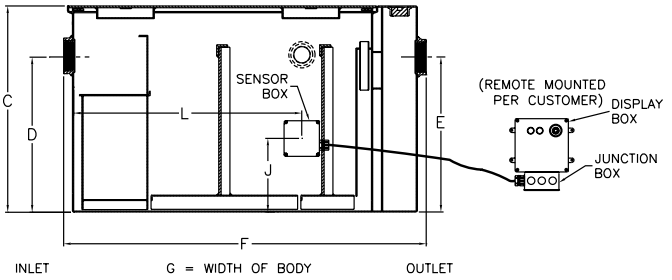

PREFIXES	DESCRIPTION	SIZE	LIST PRICE
Z1198	Acid Resistant Coated Fabricated Steel	75	43,631.00
		100	46,037.00
		125	51,203.00
		150	53,427.00
		200	69,256.00
		250	77,821.00
		300	77,821.00
		350	94,375.00
		400	POA
		450	POA
		500	POA

SUFFIXES	DESCRIPTION	ADD
–PW	Plug Wrench	83.00

BEST SELLERS	LIST PRICE
Z1198-75-3IP	43,631.00
Z1198-100-3IP	46,037.00

Flow Rate gpm [LPM]	Inlet/ Outlet inch [mm]	Water Capacity gallon [L]	Oil Capacity gallon [L]	Approximate Weight lb [kg]	No. of Covers	Dimensions in inches [mm]					
						C	D/E	F	G	J	L
75 [284]	3 [76]	65 [246]	20 [76]	332 [151]	1	22-3/4 [578]	18-1/2 [470]	36 [914]	28-5/8 [727]	10 [254]	25-3/4 [654]
100 [379]		110 [416]	27 [102]	432 [196]		27 [686]	23 [584]	42-3/4 [1086]	33-5/8 [854]	15-3/8 [391]	30-1/8 [765]
125 [473]		150 [568]	33 [125]	780 [354]	2	30-1/8 [765]	24-1/2 [622]	49-1/4 [1251]	40 [1016]	15-11/16 [398]	36-5/8 [930]
150 [568]	4 [102]	190 [719]	40 [151]	888 [403]		30-3/4 [781]	25-1/4 [641]	56 [1422]	41-3/8 [1051]	17-5/16 [440]	43-7/8 [1114]
200 [757]		265 [1003]	53 [201]	1055 [479]		35-1/2 [902]	29-7/8 [759]	61 [1549]	43-5/8 [1108]	21-1/16 [535]	46-5/8 [1184]
250 [946]	5 [127]	460 [1741]	67 [254]	1438 [652]		41 [1041]	36 [914]	71 [1803]	51-3/8 [1305]	27-13/16 [706]	56-5/8 [1438]
300 [1136]		660 [2498]	80 [303]	1840 [835]		46-1/4 [1175]	39-5/8 [1006]	80 [2032]	58-3/8 [1483]	32 [813]	65-5/8 [1667]
350 [1325]	6 [152]	860 [3255]	93 [352]	2180 [989]		50-1/2 [1283]	43-7/8 [1114]	87 [2210]	63-5/8 [1616]	35-5/16 [897]	74-1/8 [1883]
400 [1514]		1090 [4126]	107 [405]	2536 [1150]	3	54-1/4 [1378]	47-5/8 [1210]	94 [2388]	67 [1702]	39-5/16 [999]	79-1/8 [2010]
450 [1703]		1275 [4826]	120 [454]	2816 [1277]		55-1/4 [1403]	48-5/8 [1235]	100 [2540]	72 [1829]	40-3/8 [1026]	85-3/8 [2169]
500 [1893]		1435 [5432]	133 [503]	2970 [1347]		57-1/4 [1454]	51-5/8 [1311]	104 [2642]	74 [1880]	43-3/16 [1097]	88-3/8 [2245]

**Regularly furnished unless otherwise specified.*
Items designated as Best Sellers are most specified and are generally in stock for shipment.

Z1198-ST LARGE CAPACITY OIL INTERCEPTOR WITH INTEGRAL STORAGE TANK AND OIL LEVEL FLOAT SENSOR

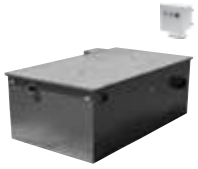

ENGINEERING SPECIFICATION

Zurn Z1198-ST oil interceptor features acid resistant coated interior and fabricated steel exterior, fiberglass sensor box containing an electronic oil level sensor, fiberglass display box with audio and visual alarms and junction box. Includes bronze cleanout plug and visible double wall trap seal, removable combination pressure equalizing/flow-diffusing baffle and sediment bucket, adjustable oil draw-off, and vent connections. Secured, gasketed, non-skid cover comes complete with flow control fitting and left hand integral storage tank. Regularly furnished with inlet and outlet in high position.

NOTES

Location of inlet and outlet from bottom of interceptor cannot be changed.

CAUTION

Interceptors must be maintained periodically in order to ensure proper operation of the system. Follow cleaning schedule based on usage.

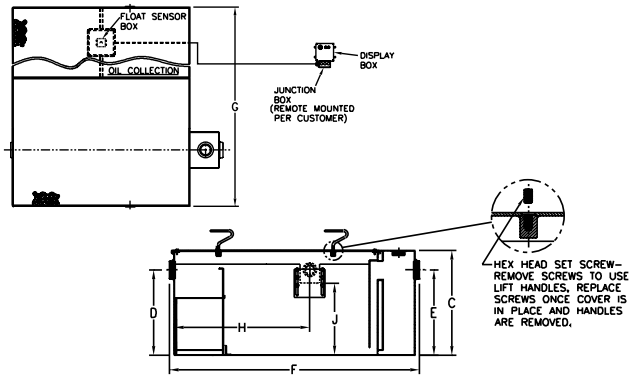

PREFIXES	DESCRIPTION	SIZE	LIST PRICE
Z1198-ST*	Acid Resistant Coated Fabricated Steel	75	54,629.00
		100	58,264.00
		125	65,945.00
		150	69,304.00
		200	93,043.00
		250	105,919.00
		300	118,377.00
		350	POA
		400	POA
		450	POA
		500	POA

SUFFIXES	DESCRIPTION	SIZE	ADD EA. ADDITIONAL 1″ OVER 10″	ADD UP TO 10″
–E	Integral Acid Resistant Coated interior and exterior fabricated steel extension section. (Specify 'C' Dim. required for recessed installation.)	75	399.00	5,878.00
		100	418.00	6,130.00
		125	453.00	6,387.00
		150	476.00	6,631.00
		200	493.00	9,492.00
		250	552.00	12,317.00
		300	633.00	14,989.00
		350	699.00	17,738.00
		400	756.00	20,699.00
		450	795.00	24,140.00
		500	831.00	27,638.00

SUFFIXES	DESCRIPTION	SIZE	ADD
–HD	Heavy-Duty Traffic Cover rated at 10,000 lbs. maximum safe live load. An increased 'C' dim. is required when -HD option is specified.	75	13,106.00
		100	18,070.00
		125	19,808.00
		150	23,191.00
		200	26,454.00
		250	36,480.00
		300	46,854.00
		350	55,263.00
		400	63,621.00
		450	72,717.00
		500	77,763.00
–K	Anchor flange 1 3/4″ down from top and 2″ wide. A 3″ minimum extension height is required when anchor flange (-K) option is specified. (Specify 'C' Dim. height required.)	75	2,827.00
		100	3,166.00
		125	3,760.00
		150	4,389.00
		200	4,685.00
		250	6,288.00
		300	7,100.00
		350	7,911.00
		400	8,399.00
		450	8,891.00
		500	9,418.00
–KC	Anchor flange 1 3/4″ down from top and 2″ wide with clamp collar. A 3″ minimum extension height is required when anchor flange (-KC) option is specified. (Specify 'C' Dim. height required.)	75	5,108.00
		100	5,698.00
		125	6,387.00
		150	7,059.00
		200	8,246.00
		250	10,676.00
		300	12,021.00
		350	13,287.00
		400	14,022.00
		450	14,986.00
		500	15,817.00
–STR	Storage tank on right-hand side when facing the inlet.		N/C

BEST SELLER	LIST PRICE
Z1198-ST-75-3IP	54,629.00

Flow Rate gpm [LPM]	Inlet/ Outlet inch [mm]	Water Capacity gallon [L]	Oil Capacity gallon [L]	Approximate Weight lb [kg]	No. of Covers Trap	No. of Covers Tank	Dimensions in inches [mm] C	D/E	F	G	H	J
75 [284]	3 [76]	88 [333]	125 [473]	615 [279]	1	1	22-3/4 [578]	18-1/2 [470]	51-3/8 [1305]	65-3/8 [1661]	29-1/4 [743]	15-1/2 [394]
100 [379]		159 [602]	250 [946]	800 [363]			27 [686]	23 [584]	60-3/8 [1534]	82-3/8 [2092]	35-1/4 [895]	19-3/4 [502]
125 [473]		208 [787]		1450 [658]	2	2	30-1/8 [765]	24-1/2 [622]	64-1/4 [1632]	84-5/8 [2149]	36 [914]	21 [533]
150 [568]	4 [102]	235 [890]		1640 [744]			30-3/4 [781]	25-1/4 [641]	68-1/4 [1734]	82-3/4 [2102]	38-11/16 [983]	21-5/8 [549]
200 [757]		333 [1261]	400 [1514]	1950 [885]			35-1/2 [902]	29-7/8 [759]	71-3/8 [1813]	92-3/4 [2356]	43-1/2 [1105]	26-3/8 [670]
250 [946]	5 [127]	445 [1685]		2650 [1202]			41 [1041]	36 [914]	75-1/2 [1918]	95-5/8 [2429]	40-3/4 [1035]	32-1/2 [826]
300 [1136]		664 [2514]		3400 [1542]			46-1/4 [1175]	39-5/8 [1006]	82-3/8 [2092]	92-3/8 [2346]	48-1/16 [1221]	37-3/4 [959]
350 [1325]	6 [152]	1006 [3808]	700 [2650]	4000 [1814]			50-1/2 [1283]	43-7/8 [1114]	103-1/8 [2619]	104-3/4 [2661]	61-15/16 [1573]	40-3/8 [1026]
400 [1514]		1266 [3808]		4700 [2132]			54-1/4 [1378]	47-5/8 [1210]	110-1/8 [2797]	102-5/8 [2607]	66-9/16 [1691]	44-1/8 [1121]
450 [1703]		1575 [5962]		5200 [2359]			55-1/4 [1403]	48-5/8 [1235]	123-1/8 [3127]	102-7/8 [2613]	75-1/4 [1911]	44-5/8 [1133]
500 [1893]		1695 [6416]		5500 [2495]			57-1/4 [1454]	51-5/8 [1311]	124-1/8 [3153]	103-5/8 [2632]	73-15/16 [1878]	48-1/8 [1222]

*Regularly furnished unless otherwise specified.

Items designated as Best Sellers are most specified and are generally in stock for shipment.

NOTES

SD1018

CARRIER SYSTEMS

CARRIER – APPLICATION INDEX 208

CARRIER – PRODUCT COMPLIANCE 208

CARRIER – TECHNICAL DATA 208

CARRIER – HOW TO SPECIFY 208

Z1200 CARRIER TOOLS AND ACCESSORIES 210

Ⓛ **Z1201-N** EZCARRY® ADJUSTABLE HORIZONTAL HIGH PERFORMANCE SIPHON JET – NO-HUB SERIES 212

Ⓛ **Z1201-H** EZCARRY® ADJUSTABLE HORIZONTAL HIGH PERFORMANCE SIPHON JET – HUB AND SPIGOT SERIES 214

Z1201-N-XB EZCARRY® BARIATRIC CARRIER – 1000 LB ADJUSTABLE HORIZONTAL SIPHON JET – NO-HUB SERIES 216

Z1201-N-XH EZCARRY® EXTRA HEAVY-DUTY 750 LB ADJUSTABLE HORIZONTAL SIPHON JET – NO-HUB SERIES 217

Ⓛ **ZE1201-N** EZCARRY® ADJUSTABLE HORIZONTAL SIPHON JET WITH ELONGATED FITTING – NO-HUB SERIES 218

Ⓛ **ZE1201-H** EZCARRY® ADJUSTABLE HORIZONTAL SIPHON JET WITH ELONGATED FITTING – HUB AND SPIGOT SERIES 220

Ⓛ **ZF1201-N** EZCARRY® HORIZONTAL SIPHON JET ONE-PIECE CARRIER – NO-HUB SERIES 222

Ⓛ **ZN1201-N** EZCARRY® ADJUSTABLE HORIZONTAL SIPHON JET – NO-HUB NARROW WALL SYSTEM (9-3/8" DEPTH FRONT TO BACK) 223

Ⓛ **Z1202-N** EZCARRY® ADJUSTABLE VERTICAL HIGH PERFORMANCE SIPHON JET – NO-HUB SERIES 224

Ⓛ **Z1202-H** EZCARRY® ADJUSTABLE VERTICAL HIGH PERFORMANCE SIPHON JET – HUB AND SPIGOT SERIES 226

Z1202-N-XB EZCARRY® BARIATRIC CARRIER – 1000 LB ADJUSTABLE VERTICAL SIPHON JET – NO-HUB SERIES 228

Z1202-N-XH EZCARRY® EXTRA HEAVY-DUTY 750 LB ADJUSTABLE VERTICAL SIPHON JET – NO-HUB SERIES 229

Ⓛ **ZF1202-N** EZCARRY® VERTICAL SIPHON JET ONE-PIECE CARRIER – NO-HUB SERIES 230

Ⓛ **ZN1202-N** EZCARRY® ADJUSTABLE VERTICAL SIPHON JET – NO-HUB NARROW WALL SYSTEM 231

Z1203-N ADJUSTABLE HORIZONTAL SIPHON JET – NO-HUB SERIES 232

Z1203-H ADJUSTABLE HORIZONTAL SIPHON JET – HUB AND SPIGOT SERIES 234

Ⓛ **ZE1203-N** ADJUSTABLE HORIZONTAL SIPHON JET WITH ELONGATED FITTING – NO-HUB SERIES 236

Ⓛ **ZE1203-H** ADJUSTABLE HORIZONTAL SIPHON JET WITH ELONGATED FITTING – HUB AND SPIGOT SERIES 238

Z1204-H ADJUSTABLE VERTICAL SIPHON JET – HUB AND SPIGOT SERIES 240

Z1204-N ADJUSTABLE VERTICAL SIPHON JET – NO-HUB SERIES 242

Z1207-N ADJUSTABLE HORIZONTAL HIGH ROUGH-IN SIPHON JET – NO-HUB 244

Z1208-N VERTICAL SIPHON JET WATER CLOSET SUPPORT SYSTEM – NO-HUB 245

Z1208-H VERTICAL SIPHON JET WATER CLOSET SUPPORT SYSTEM – HUB AND SPIGOT 246

Z1209-N VERTICAL OFFSET SIPHON JET WATER CLOSET SUPPORT SYSTEM – NO-HUB 247

ZN1209-N VERTICAL OFFSET SIPHON JET – NO-HUB NARROW WALL SYSTEM 248

Z1212 WALL CLOSET SUPPORT SYSTEM 249

Z1213-N 4" VERTICAL SIPHON JET WATER CLOSET SUPPORT SYSTEM – 2" OR 4" TOP VENT CLOSET FITTING ONLY (NO SUPPORT) 250

Z1216 90° DOUBLE NO-HUB SYSTEM FOR FLOOR MOUNTED BACK OUTLET WATER CLOSETS 251

Z1217 COUPLING TYPE SYSTEM – WALL URINAL/SERVICE SINK 252

Z1218 COUPLING TYPE SYSTEM – WALL URINAL/SERVICE SINK 253

Z1221 PLATE TYPE SYSTEM – WALL URINALS 254

Z1222 PLATE TYPE SYSTEM – WITH BEARING PLATE 254

Z1223 PLATE TYPE SYSTEM – TROUGH URINALS 255

Z1224 PLATE TYPE SYSTEM – LAVATORY WITH BACK 255

Z1225 PLATE TYPE SYSTEM – WATER COOLERS 256

Z1229 PLATE AND EXPOSED ARM – HEAVY SINKS 256

Z1231 CONCEALED ARM SYSTEM – WALL LAVATORIES 257

Ⓛ **Z1231-EZ** CONCEALED ARM SYSTEM – WALL LAVATORIES 257

Ⓛ **Z1231-EZR** CONCEALED ARM SYSTEM – FOR WALL LAVATORIES WITH ADJUSTABLE UPRIGHTS AND HEADER PLATES 258

Z1236 EXPOSED ARM SYSTEM – WALL LAVATORIES/SINKS 259

Z1251 CONCEALED ARM SYSTEM – WALL SUPPORTED 260

Z1253 ADJUSTABLE CONCEALED ARM SYSTEM – WALL SUPPORTED 260

Z1255 EXPOSED ARM SYSTEM – WALL SUPPORTED 261

Z1256 EXPOSED ARM SYSTEM – WALL SUPPORTED 262

Z1257 EXPOSED ARM SYSTEM – WALL SUPPORTED 262

Z1258 EXPOSED ARM SYSTEM – WALL SUPPORTED 263

Z1259 PLATE SYSTEM – WALL SUPPORTED 264

Z1280 WOOD STUD SUPPORTED WATER CLOSET CARRIER – NO-HUB 265

Z1282 WOOD STUD SUPPORTED WATER CLOSET CARRIER – HUB AND SPIGOT 265

Z1283 WOOD STUD SUPPORTED WATER CLOSET CARRIER – PLASTIC PIPE 266

Z1284 CONCRETE FLOOR SUPPORTED WATER CLOSET CARRIER 266

Z1285 WOOD STUD SUPPORTED WATER CLOSET CARRIER 267

Z1290 EASTERN STYLE WATER CLOSET 268

CARRIER – APPLICATION INDEX

APPLICATION	TYPE	RECOMMENDED CARRIER
Commercial (Cement Slab) Construction Off-the-Floor Closet	300 lb Rigid System	Z1201, ZE1201, ZF1201, ZN1201, Z1202, ZF1202, ZN1202 Z1203, ZE1203, Z1204, Z1207, Z1208, Z1209, ZN1209
	500 lb Rigid System	Z1201, Z1202, ZE1201, ZF1201, ZN1201, ZF1202, ZN1202
	750 lb Extra-Heavy-Duty	Z1201-XH, Z1202-XH
	1000 lb Bariatric	Z1201-XB, Z1202-XB
Wood Stud and Residential Off-the-Floor Closet		Z1212, Z1280, Z1282, Z1283, Z1284, Z1285
Penal Fixtures and Floor Mounted Back Outlet Fixtures		Z1216
Off-the-Floor Lavatories	Plate Type	Z1224, Z1224-EZ, Z1259 (No Uprights)
	Concealed Arm	Z1231, Z1231-EZ, Z1231-EZR, Z1251, Z1253 (No Uprights)
	Exposed Arm	Z1236, Z1256, Z1257, Z1258 (No Uprights)
Wash Sinks, Mop Sinks, Heavy Cast Sinks, Service Sinks		Z1217, Z1218, Z1229
Off-the-Floor Urinals		Z1221, Z1221-EZ, Z1222, Z1222-EZ, Z1223
Drinking Fountains, Water Coolers		Z1225
Eastern Style Water Closet		Z1290
System Accessories		Z1200

CARRIER – PRODUCT COMPLIANCE

Zurn systems comply with ANSI A112.6.1M and are listed with IAPMO. For verification of a selected carrier, contact your local Zurn Sales Representative.

CARRIER – HOW TO SPECIFY

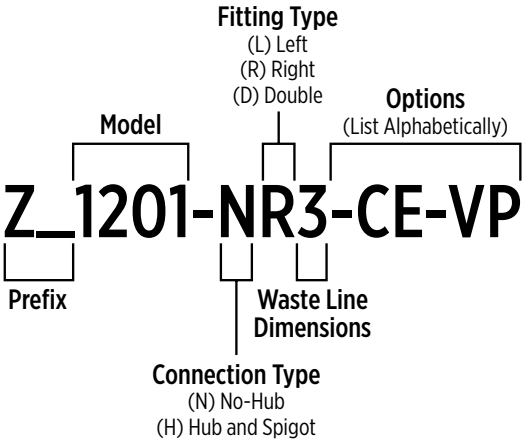

CARRIER – TECHNICAL DATA

DETERMINATION OF RIGHT- AND LEFT-HAND SYSTEMS

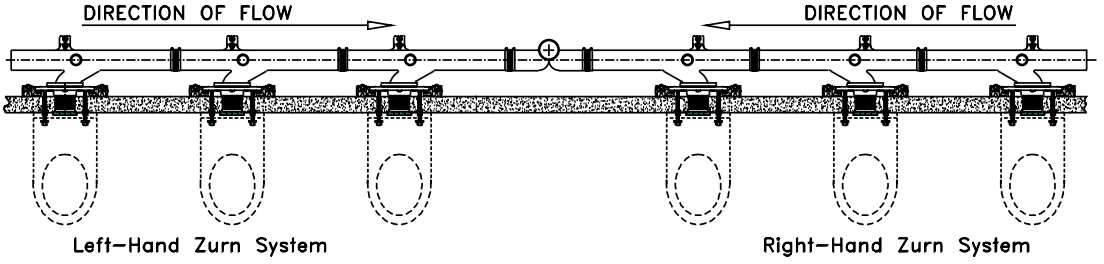

Stand facing the fixture.

If flow is from the right, Zurn System is right-hand. If flow is from the left, Zurn System is left-hand.

DETERMINATION OF COUPLING AND FIXTURE DISTANCES FROM FRONT OF WALL

To ensure a tight seal at outlet of closet having a rectangular groove, the front end of the coupling should be located to compress the gasket adequately when the fixture is in the desired location. This dimension will vary depending on depth of recess (Dim. A) in closet. The following formula may be used to determine amount coupling should extend (Dim. B) in front of finished wall.

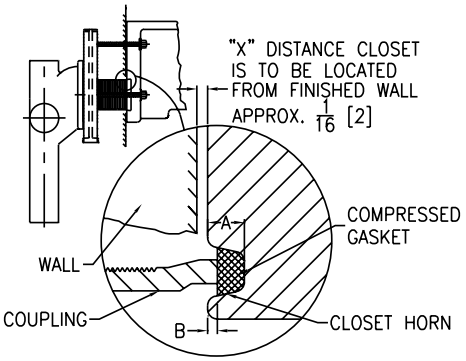

Inset illustrates depth of gasket recess in fixture and coupling with normal pressure on gasket.

A = depth of recess in closet

X = distance closet is to be located from finished wall

B = distance coupling should extend in front of finished wall.

Thus, A + X - 1/2" = B

With fixtures having vee-shaped grooves, coupling may have to extend an additional 1/8" or more. With any closet, the coupling must compress the gasket enough so that the adhesive-coated surfaces are in good contact with the china and the face of the coupling.

IMPORTANT: Bearing nuts and washers must be located properly to establish and maintain dimension "X."

DISTANCE FIXTURE BOLTS LOCATED IN FRONT OF WALL

To locate fixture bolts:

T = thickness of wall flange of closet

X = distance closet is to be located from finished wall

B = distance fixture studs should extend in front of finished wall.

Thus, T + X + 5/8" = B

"Minimum 'P' Dimension" is the minimum dimension from front of faceplate to finished wall:

Z1201/Z1202/Z1203/Z1204	Z1208 thru Z1209
1-3/4"	1"

"Standard 'P' Dimension" which is regularly supplied unless otherwise specified, provides for the following dimensions from the front of the faceplate to finished wall:

Z1201/Z1202/Z1203/Z1204		Z1208 thru Z1209	
MIN.	MAX.	MIN.	MAX.
5"	6"	4"	5-1/8"

Longer 'P' dimensions (or shorter) with couplings up to, and including 12", are furnished at no extra charge. An additional charge will be made for greater 'P' dimensions (see Suffix -CL).

ALLOWANCE FOR CONCEALED FLUSH VALVES

When wall closets are installed with concealed flush valves having rear inlet supply, location of faceplate is important – for Siphon Jet bowls, it is not necessary to locate faceplate behind supply line, since supply line will clear top of faceplate and vent line. For Blow Out installations, however, faceplate must be located behind supply line to prevent interference of faceplate with supply line.

Dimensions below based on B = 3/8".

Z1201/Z1202/Z1203/Z1204			
'P' Dimension*			
Min.	Max.	Coupling Length	Stud Length
1-3/4	2-3/4	2-3/4	6
2-1/2	3-1/2	3-1/2	8
3	4	4	8
4	5	5	8
5	6	6	9
6	7	7	10
7	8	8	11-1/4
7-1/2	8-1/2	8-1/2	11-1/4
8-1/4	9-1/4	9-1/4	12-3/4
9	10	10	12-3/4
10	11	11	15-3/4
11	12	12	15-3/4

Z1208 thru Z1209			
'P' Dimension*			
Min.	Max.	Coupling Length	Stud Length
1	1-7/8	2-3/4	6
1-1/2	2-5/8	3-1/2	8
2	3-1/8	4	8
3	4-1/8	5	8
4	5-1/8	6	9
5	6-1/8	7	9
6	7-1/8	8	11-1/4
6-1/2	7-5/8	8-1/2	11-1/4
7-1/4	8-3/8	9-1/4	12-3/4
8	9-1/8	10	12-3/4
9	10-1/8	11	15-3/4
10	11-1/8	12	15-3/4

Z1200 CARRIER TOOLS AND ACCESSORIES

EZCARRY-HANDLE

Z1200-CPLGWRNCH

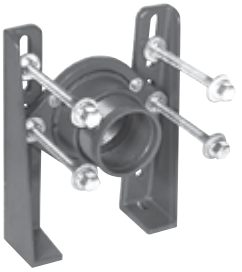

Z1200-AUX-SPRT

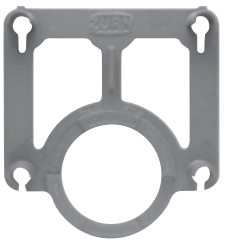

Z1200-RI-GAUGE

Z1200-NEOSEAL-GSKT-4

Z1200-RTRFT-NUT

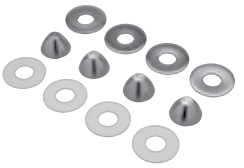

Z1200-VP-HARDWARE

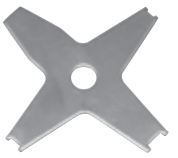

Z1200-VP-WRENCH

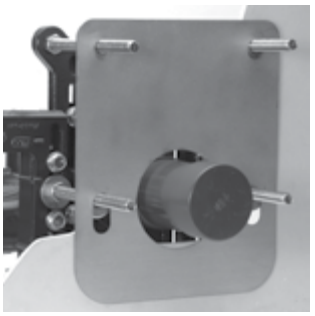

EZCUTGUIDE†

†Image showing old style carrier

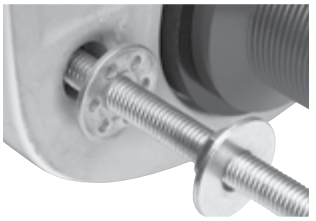

Z1200-ADJ-NUT

Z1200-OFL Patented

Z1200-OFR Patented

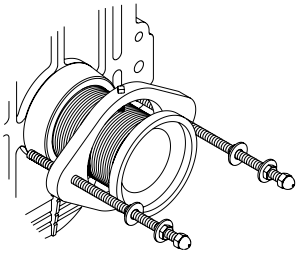

Z1200-FLRMNT-ADPT

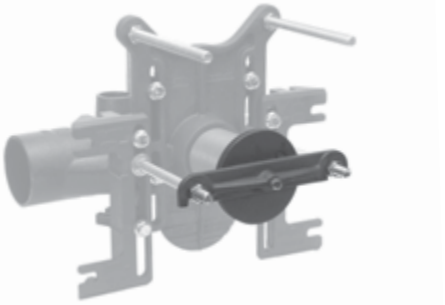

Z1200-CC-TESTCAP shown on Z1201-N†

Z1200-CC-TESTCAP

†Image showing old style carrier

**Regularly furnished unless otherwise specified.*
For additional product information, please visit www.zurn.com

Items designated as Best Sellers are most specified and are generally in stock for shipment.
This symbol denotes a product that is engineered to reduce installation and rework time.
For Additional System Tools See "Z1200 Carrier Tools and Accessories" on page 210

Z1200 CARRIER TOOLS AND ACCESSORIES

PRODUCT NUMBER	DESCRIPTION	LIST PRICE
EZCARRY-HANDLE	Carry Handle for Z1201/ Z1202	123.00
EZCUTGUIDE	EZ-Set Cutting Guide for use with -CE coupling system **- SEE LEGACY ADDENDUM ON PAGE 369 FOR MORE INFORMATION**	257.00
Z1200-ADJ-NUT	Flush Wall Adjustment Nut/Washer	10.00
Z1200-AUX-SPRT	Auxiliary Support Assembly (Required For P-Dim. Greater than 18")	861.00
Z1200-AUX-FT-SPRT	Auxiliary Foot Support Assembly (Required For P-Dim. 7" - 18")	324.00
Z1200-CC-TESTCAP	Mechanical Test Cap Assembly for -CC Coupling	109.00
Z1200-CPLGWRNCH-3	Adjusting Wrench for 3" Adjustable Coupling **- BEST SELLER**	109.00
Z1200-CPLGWRNCH-4	Adjusting Wrench for 4" Adjustable Coupling **- BEST SELLER**	109.00
Z1200-FINFRAME-SJ	Finishing Frame for Siphon Jet System **- BEST SELLER**	84.00
Z1200-FINFRAME-B	Finishing Frame for Blowout Type System (Not for use with Z1201/ Z1202)	84.00
Z1200-FLRMNT-ADPT	Adapter Flange Assembly for Floor Mounted Back Outlet Fixture **- BEST SELLER**	158.00
Z1200-FT-EXT-2	2" Foot Extension Assembly	90.00
Z1200-FT-EXT-3	3" Foot Extension Assembly	90.00
Z1200-FT-EXT-4	4" Foot Extension Assembly	90.00
Z1200-NEOSEAL-GSKT-4	4" Bonded "Neo-Seal" Closet Gasket Kit (Previously Z1210-57) **- BEST SELLER**	84.00
Z1200-OFL	Offset Fitting - Left **- BEST SELLER**	766.00
Z1200-OFR	Offset Fitting - Right	766.00
Z1200-RI-GAUGE	Water Closet Rough-In Gauge	84.00
Z1200-RTRTFT-NUT	Retro-Fit Cap Nut	46.00
Z1200-SPLY-SPRT-UR	Flush Valve Supply Support for Urinals	90.00
Z1200-SPLY-SPRT-WC	Flush Valve Supply Support for Water Closets **- BEST SELLER**	90.00
Z1200-VP-WRNCH	Wrench for Vandal-Proof Screws	28.00
Z1200-VP-HRDWR-1/4	1/4" Vandal-Proof Cap Nuts (1 Set)	137.00
Z1200-VP-HRDWR-3/8	3/8" Vandal-Proof Cap Nuts (1 Set)	137.00
Z1200-VP-HRDWR-5/8	5/8" Vandal-Proof Cap Nuts (1 Set)	137.00

Z1200-SPLY-SPRT-WC

Z1200-SPLY-SPRT-UR

Z1200-SPLY-SPRT-WC shown on Z1201-N†

†Image showing old style carrier

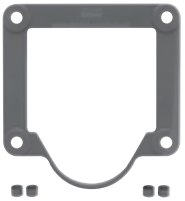

Z1200-FINFRAME-SJ

Z1200-FINFRAME-B

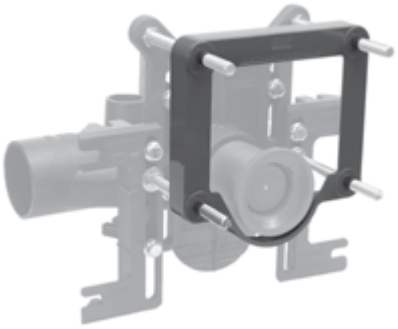

Z1200-FINFRAME-SJ shown on Z1201-N†

†Image showing old style carrier

Items designated as Best Sellers are most specified and are generally in stock for shipment.

This symbol denotes a product that is engineered to reduce installation and rework time.

For Additional System Tools See "Z1200 Carrier Tools and Accessories" on page 210

**Regularly furnished unless otherwise specified.*

For additional product information, please visit www.zurn.com

Z1201-N EZCARRY® ADJUSTABLE HORIZONTAL HIGH PERFORMANCE SIPHON JET – NO-HUB SERIES

Patented

ENGINEERING SPECIFICATION

Zurn Z1201-N( ) EZCarry® horizontal siphon jet water closet carrier system features high performance waterway and ( ) no-hub connections. System includes Dura-Coated cast iron right-hand, left-hand, or double main fitting with hydro-mechanically optimized sweep and extended 2" vent, adjustable gasketed faceplate, floor mounted pre-fab slotted foot supports with top anchoring pre-fab support base, heavy-duty 1/2" rear anchor tie down, fixture bolts, trim, stud protectors, bonded Neo-Seal gasket, and corrosion resistant adjustable 3" diameter x 6" coupling with integral test cap designed to increase flow velocity and line carry. EZCarry system complies with the requirements of ASME A112.6.1M, up to a 500 lb static load rate.

NOTES

1. Cut 4" adjustable coupling minimum "P" dimension obtainable = 2". EZ-Set™ coupling, minimum 'P' dimension obtainable = 4-1/4" or 2-1/16" for 12" NPT.
2. Feet bolted to floor using minimum 1/2" diameter anchors and back slots on carrier feet.
3. Rear anchor foot required for secure installation.

Z1201-NR4 (Single)

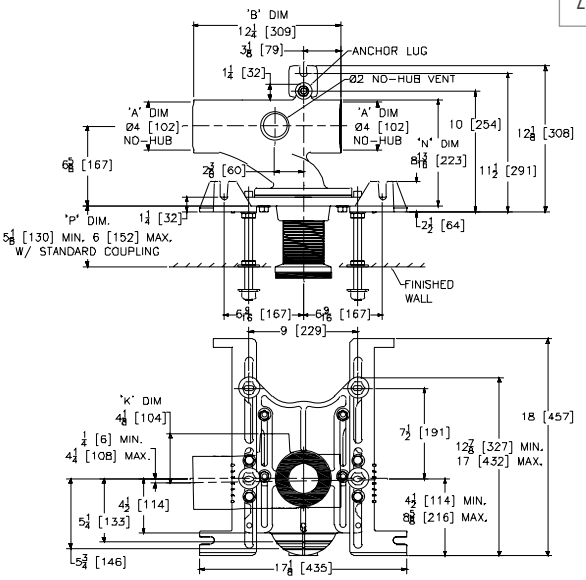

Z1201-ND4 (Double)

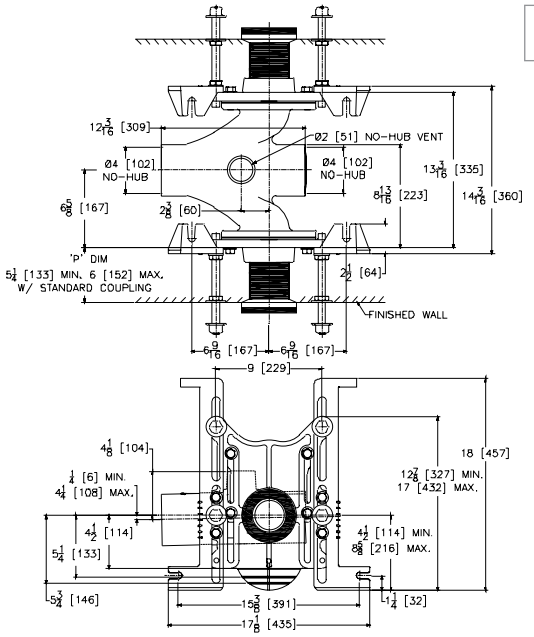

*Regularly furnished unless otherwise specified.

Items designated as Best Sellers are most specified and are generally in stock for shipment.

For additional product information, please visit www.zurn.com

This symbol denotes a product that is engineered to reduce installation and rework time.

For Additional System Tools See "Z1200 Carrier Tools and Accessories" on page 210

Z1201-N EZCARRY® ADJUSTABLE HORIZONTAL HIGH PERFORMANCE SIPHON JET – NO-HUB SERIES

Product Number	Dimensions in inches [mm]				Approximate Weight lb [kg]
	A	B	K	N	
Z1201-NL3	3 [76]	11-1/2 [292]	4-7/16 [113]	7-3/8 [187]	55 [25]
Z1201-NR3					
Z1201-ND3				9-3/4 [248]	101 [46]
Z1201-NL4	4 [102]	12-1/4 [311]	4-1/8 [105]	8-13/16 [224]	58 [26]
Z1201-NR4					
Z1201-ND4					104 [47]

PREFIXES	DESCRIPTION	SINGLE	DOUBLE
Z1201*	D.C.C.I. System with 4″ Adjustable Coupling	Combine with Fitting Type for Pricing	
ZQ1201	D.C.C.I. System with NPT Faceplate Non-Adjustable Coupling		
FITTING TYPE			
-NL3	3″ No-Hub Left-Hand Inlet with Flow to Right	1,448.00	–
-NR3	3″ No-Hub Right-Hand Inlet with Flow to Left	1,448.00	–
-ND3	3″ No-Hub Back-to-Back Inlet (Double)	–	2,671.00
-NL4	4″ No-Hub Left-Hand Inlet with Flow to Right	1,584.00	–
-NR4	4″ No-Hub Right-Hand Inlet with Flow to Left	1,584.00	–
-ND4	4″ No-Hub Back-to-Back Inlet (Double)	–	2,965.00
SUFFIXES			ADD
–A	Auxiliary Support Assembly (Required For 'P' Dim. Greater than 18″)	861.00	1,720.00
–CC	Corrosion Resistant Cast Iron Coupling (2-1/4″ to 12″)	N/C	N/C
–CE	EZ-SET™ Coupling (6″ or 12″ standard length)	75.00	150.00
	Custom length greater than 12″- Per Inch (Specify Length)	102.00	203.00
–CL	Custom Length Standard Coupling with Integral Test Cap (Specify Length 4″, 8″, 10″ or 12″)	N/C	N/C
–CS	2-1/4″ Polymer Coupling with Integral Test Cap	N/C	N/C
–G	Galvanized Cast Iron	817.00	1,633.00
–JC	2″ Auxiliary Inlet with 1/8″ Bend (1NL4, 1NR4 Only)	365.00	–
–M	Auxiliary Foot Support (Required For 'P' Dim. 7″ - 18″)	324.00	645.00
–RYK17	One Piece Unistrut Pre-Fab Foot Support	N/C	N/C
–VP	Vandal-Proof Trim	137.00	270.00
–45	Finishing Frame for Siphon Jet System	84.00	167.00
–50	Flush Valve Supply Support for Water Closet	90.00	176.00
			DEDUCT
–F	Floor Mounted, Back Outlet Fixture Support	-158.00	-315.00

BEST SELLERS	LIST PRICE
Z1201-ND4	2,965.00
Z1201-ND4-CL=12	2,965.00
Z1201-NL3	1,448.00
Z1201-NL4	1,584.00
Z1201-NL4-CL=12	1,584.00
Z1201-NR4	1,584.00
Z1201-NR4-CL=12	1,584.00
ZQ1201-ND4-45-50	3,308.00
ZQ1201-NR4-45-50	1,758.00

Z1200-EZCUTGUIDE†

†Image showing old style carrier

Z1200-CPLGWRNCH-3

Items designated as Best Sellers are most specified and are generally in stock for shipment.

This symbol denotes a product that is engineered to reduce installation and rework time.

For Additional System Tools See "Z1200 Carrier Tools and Accessories" on page 210

**Regularly furnished unless otherwise specified.*

For additional product information, please visit www.zurn.com

Z1201-H EZCARRY® ADJUSTABLE HORIZONTAL HIGH PERFORMANCE SIPHON JET – HUB AND SPIGOT SERIES

Patented

ENGINEERING SPECIFICATION

Zurn Z1201-H( ) EZCarry® horizontal siphon jet water closet carrier system features high performance waterway and 4" hub and spigot connections. System includes Dura-Coated cast iron right-hand, left-hand, or double main fitting with hydro-mechanically optimized sweep and extended 2" vent, adjustable gasketed faceplate, floor mounted pre-fab slotted foot supports with top anchoring pre-fab support base, heavy-duty 1/2" rear anchor tie down, fixture bolts, trim, stud protectors, bonded Neo-Seal gasket, and corrosion resistant adjustable 3" diameter x 6" coupling with integral test cap designed to increase flow velocity and line carry. EZCarry® system complies with the requirements of ASME A112.6.1M, up to a 500 lb static load rating.

NOTES

1. Cut 4" adjustable coupling minimum "P" dimension obtainable = 2". EZ-Set™ coupling, minimum 'P' dimension obtainable = 4-1/4" or 2-1/16" for 12" NPT.
2. Feet bolted to floor using minimum 1/2" diameter anchors and back slots on carrier feet.
3. Rear anchor foot required for secure installation.

Z1201-HR4 (Single)

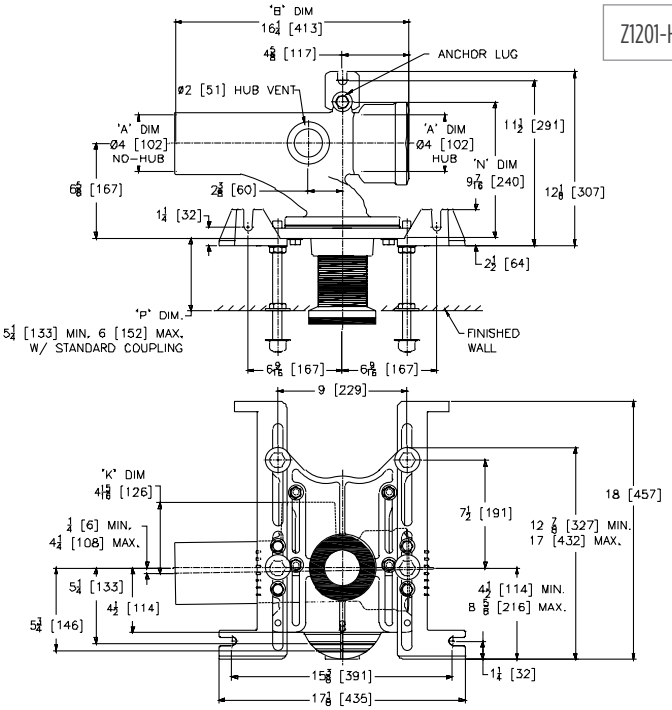

Z1201-HD4 (Double)

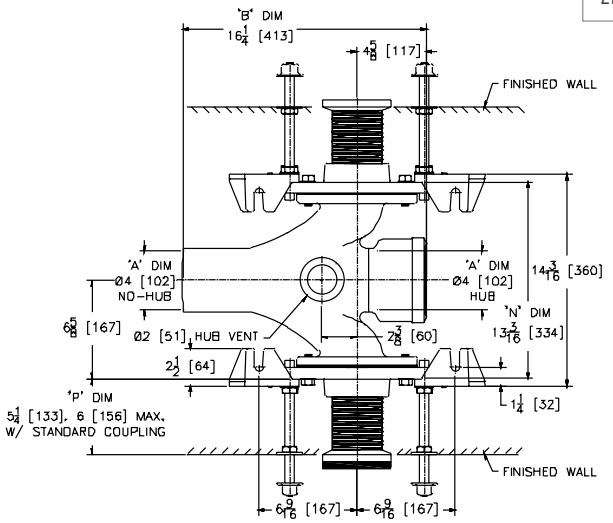

*Regularly furnished unless otherwise specified.

Items designated as Best Sellers are most specified and are generally in stock for shipment.

For additional product information, please visit www.zurn.com

This symbol denotes a product that is engineered to reduce installation and rework time.

For Additional System Tools See "Z1200 Carrier Tools and Accessories" on page 210

Z1201-H EZCARRY® ADJUSTABLE HORIZONTAL HIGH PERFORMANCE SIPHON JET – HUB AND SPIGOT SERIES

Product Number	Dimensions in inches [mm]				Approximate Weight lb [kg]
	A	B	K	N	
Z1201-HL4	4 [102]	13-3/4 [349]	4-5/16 [110]	9-1/2 241]	64 [29]
Z1201-HR4					
Z1201-HD4			6-1/8 [156]	13-3/16 [351]	109 [49]

PREFIXES	DESCRIPTION	SINGLE	DOUBLE
Z1201*	D.C.C.I. System with 4″ Adjustable Coupling	Combine with Fitting Type for Pricing	
ZQ1201	D.C.C.I. System with NPT Faceplate, Non-Adjustable Coupling		
FITTING TYPE			
-HL4	4″ Hub & Spigot, Left-Hand Inlet with Flow to Right	1,630.00	–
-HR4	4″ Hub & Spigot, Right-Hand Inlet with Flow to Left	1,630.00	–
-HD4	4″ Hub & Spigot Back-to-Back Inlet (Double)	–	3,044.00
SUFFIXES			**ADD**
–A	Auxiliary Support Assembly (Required For 'P' Dim. Greater than 18″)	861.00	1,720.00
–CC	Corrosion Resistant Cast Iron Coupling (2-1/4″ to 12″)	N/C	N/C
–CE	EZ-SET™ Coupling (6″ or 12″ standard length)	75.00	150.00
	Custom length greater than 12″- Per Inch (Specify Length)	102.00	203.00
–CL	Custom Length Standard Coupling with Integral Test Cap (Specify Length 4″, 8″, 10″ or 12″)	N/C	N/C
–CS	2-1/4″ Polymer Coupling with Integral Test Cap	N/C	N/C
–G	Galvanized Cast Iron	817.00	1,633.00
–M	Auxiliary Foot Support (Required For 'P' Dim. 7″ thru 18″)	324.00	645.00
–RYK17	One Piece Unistrut Pre-Fab Foot Support	N/C	N/C
–VP	Vandal-Proof Trim	137.00	270.00
–45	Finishing Frame for Siphon Jet System	84.00	167.00
–50	Flush Valve Supply Support for Water Closet	90.00	176.00
			DEDUCT
-F	Floor Mounted, Back Outlet Fixture Support	-158.00	-315.00

Z1200-EZCUTGUIDE†

†Image showing old style carrier

Z1200-CPLGWRNCH-3

Items designated as Best Sellers are most specified and are generally in stock for shipment.

This symbol denotes a product that is engineered to reduce installation and rework time.

For Additional System Tools See "Z1200 Carrier Tools and Accessories" on page 210

**Regularly furnished unless otherwise specified.*

For additional product information, please visit www.zurn.com

Z1201-N-XB EZCARRY® BARIATRIC CARRIER – 1000 LB ADJUSTABLE HORIZONTAL SIPHON JET – NO-HUB SERIES

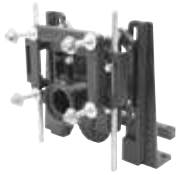

Patented

ENGINEERING SPECIFICATION

Zurn Z1201-N( )-XB EZCarry® bariatric horizontal siphon jet water closet carrier system features high performance Dura-Coated cast iron main fitting with hydromechanically optimized sweep, 4″ no-hub connections, and extended 2″ vent. Corrosion resistant adjustable cast iron coupling is designed to increase flow velocity and line carry. Labor saving Neo-Seal bonded gasket optimizes flow performance, while reducing installation steps. Complete system includes an adjustable, gasketed faceplate, floor mounted foot supports, rigid support frame assembly, extra heavy-duty 1/2″ rear anchor tie down, fixture bolts, trim, and stud protectors. EZCarry® XB system complies with all applicable requirements of ASME A112.6.1M up to a 1000 lb maximum static load.

NOTES

1. Cut 4″ adjustable coupling minimum 'P' dimension obtainable = 3″.
2. Feet bolted to floor using minimum 1/2″ diameter anchors.
3. Rear anchor assembly required for secure installation.
4. Floor anchors must each be able to withstand a pull-out force of 748 lb.
5. Pull-out forces are calculated values with standard coupling assembly. No safety factor has been applied. See Form #C38 for more information.

Product Number	Approximate Weight lb [kg]
Z1201-NL4-XB	100 [45]
Z1201-NR4-XB	
Z1201-ND4-XB	173 [78]

PREFIXES	DESCRIPTION	SINGLE	DOUBLE
Z1201*	D.C.C.I. System with 4″ Adjustable Coupling	Combine with Fitting Type for Pricing	
FITTING TYPE			
-NL4-XB	4″ No-Hub, Left-Hand Inlet with Flow to Right	4,637.00	–
-NR4-XB	4″ No-Hub, Right-Hand Inlet with Flow to Left	4,637.00	–
-ND4-XB	4″ No-Hub, Back-to-Back Inlet (Double)	–	8,947.00
SUFFIXES			**ADD**
–CC	Corrosion Resistant Cast Iron Coupling (2-1/4″ thru 12″)	N/C	N/C
–G	Galvanized Cast Iron	817.00	1,633.00
–JC	2″ Auxiliary Inlet with 1/8″ Bend	365.00	–
–VP	Vandal-Proof Trim	137.00	270.00
–50	Flush Valve Supply Support for Water Closet	90.00	176.00

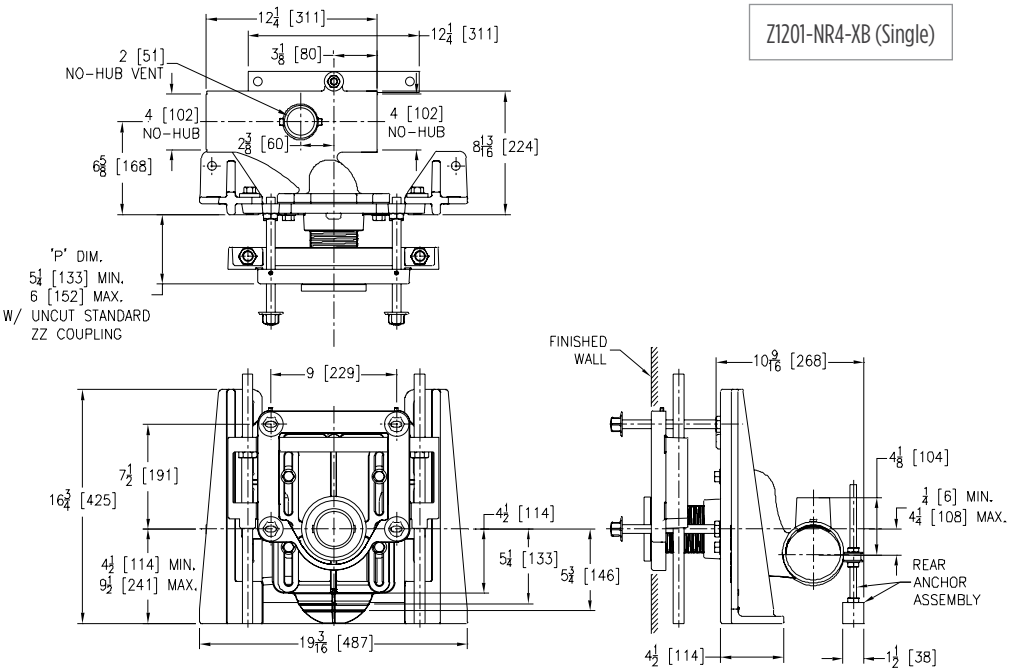

*Regularly furnished unless otherwise specified.

For additional product information, please visit www.zurn.com

Items designated as Best Sellers are most specified and are generally in stock for shipment.

This symbol denotes a product that is engineered to reduce installation and rework time.

For Additional System Tools See "Z1200 Carrier Tools and Accessories" on page 210

Z1201-N-XH EZCARRY® EXTRA HEAVY-DUTY 750 LB ADJUSTABLE HORIZONTAL SIPHON JET – NO-HUB SERIES

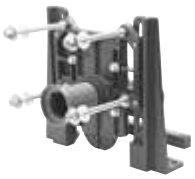

Patented

ENGINEERING SPECIFICATION

Zurn Z1201-N( )-XH EZCarry® extra heavy-duty horizontal siphon jet water closet carrier system features high performance Dura-Coated cast iron main fitting with hydro-mechanically optimized sweep, 4" no-hub connections, and extended 2" vent. Corrosion resistant adjustable 3" diameter x 6" coupling with integral test cap is designed to increase flow velocity and line carry. Labor saving Neo-Seal bonded gasket optimizes flow performance, while reducing installation steps. Complete system includes an adjustable, gasketed faceplate, floor mounted foot supports, extra heavy-duty 1/2" rear anchor tie down, fixture bolts, trim, and stud protectors. EZCarry® XH system complies with all applicable requirements of ASME A112.6.1M up to a 750 lb maximum static load.

NOTES

1. Cut 4" adjustable coupling minimum 'P' dimension obtainable = 2". Cut ZQ coupling minimum 'P' dimension obtainable = 5".
2. Feet bolted to floor using mininum 1/2" diameter anchors.
3. Rear anchor assembly required for secure installation.
4. Floor anchors must each be able to withstand a pull-out force of 820 lb.
5. Pull-out forces are calculated values with standard coupling assembly. No safety factor has been applied. See Form #C38 for more information.

Product Number	Approximate Weight lb [kg]
Z1201-NL3-XH	81 [37]
Z1201-NR3-XH	
Z1201-ND3-XH	138 [63]
Z1201-NL4-XH	84 [38]
Z1201-NR4-XH	
Z1201-ND4-XH	142 [64]

PREFIXES		SINGLE	DOUBLE
Z1201*	D.C.C.I. System with 4" Adjustable Coupling	Combine with Fitting Type for Pricing	
ZQ1201	D.C.C.I. System with NPT Faceplate, Non-Adjustable Coupling		
FITTING TYPE			
-NL3-XH	3" No-Hub Left-Hand Inlet with Flow to Right	3,402.00	–
-NR3-XH	3" No-Hub Right-Hand Inlet with Flow to Left	3,402.00	–
-ND3-XH	3" No-Hub Back-to-Back Inlet (Double)	–	6,649.00
-NL4-XH	4" No-Hub Left-Hand Inlet with Flow to Right	3,276.00	–
-NR4-XH	4" No-Hub Right-Hand Inlet with Flow to Left	3,276.00	–
-ND4-XH	4" No-Hub Back-to-Back Inlet (Double)	–	6,325.00
SUFFIXES			ADD
–CC	Corrosion Resistant Cast Iron Coupling (2-1/4" thru 12")	N/C	N/C
–CE	EZ-SET™ Coupling (6" or 12" standard length)	75.00	150.00
	Custom length greater than 12"- Per Inch (Specify Length)	102.00	203.00
–CL	Custom Length Standard Coupling with Integral Test Cap (Specify length 4", 8", 10", or 12")	N/C	N/C
–CS	2-1/4" Polymer Coupling with Integral Test Cap	N/C	N/C
–G	Galvanized Cast Iron	817.00	1,633.00
–JC	2" Auxiliary Inlet with 1/8" Bend	365.00	–
–VP	Vandal-Proof Trim	137.00	270.00
–45	Finishing Frame for Siphon Jet System	84.00	167.00
–50	Flush Valve Supply Support for Water Closet	90.00	176.00

Z1201-NR4-XH (Single)

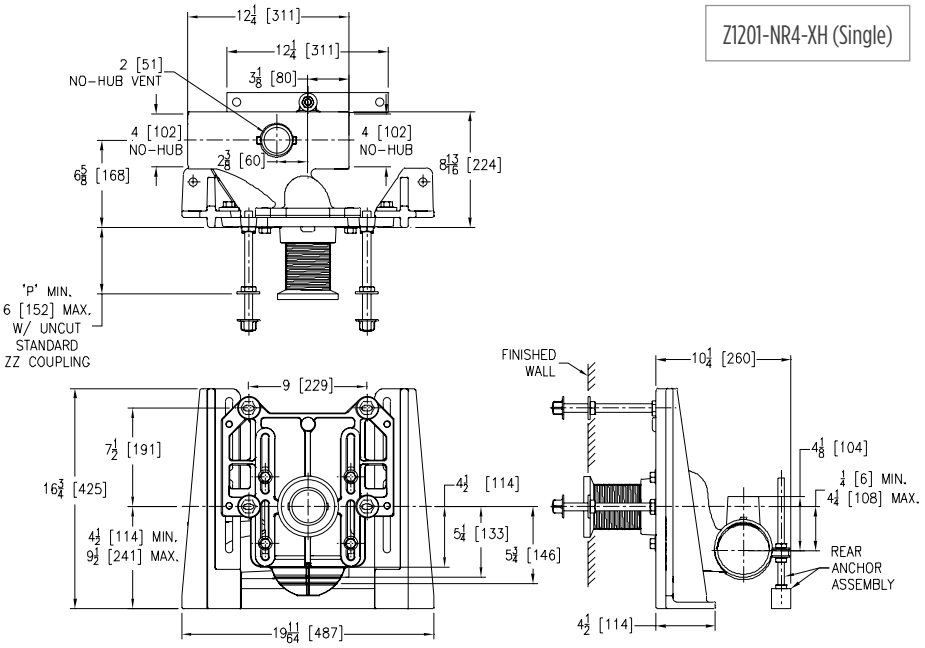

Items designated as Best Sellers are most specified and are generally in stock for shipment.

This symbol denotes a product that is engineered to reduce installation and rework time.

For Additional System Tools See "Z1200 Carrier Tools and Accessories" on page 210

**Regularly furnished unless otherwise specified.*

For additional product information, please visit www.zurn.com

⏲ ZE1201-N EZCARRY® ADJUSTABLE HORIZONTAL SIPHON JET WITH ELONGATED FITTING – NO-HUB SERIES

Patent Pending

ENGINEERING SPECIFICATION

Zurn ZE1201-N( ) EZCarry® horizontal siphon jet water closet carrier system features high performance Dura-Coated cast iron main fitting with hydromechanically optimized sweep, 4" no-hub connections, 38" barrel for stall-to-stall direct connection, and extended 2" vent. Corrosion resistant adjustable 3" diameter x 6" coupling with integral test cap is designed to increase flow velocity and line carry. Labor saving Neo-Seal bonded gasket optimizes flow performance, while reducing installation steps. Complete system includes an adjustable, gasketed faceplate, floor mounted foot supports with top anchoring pre-fab support base, heavy-duty 1/2" rear anchor tie down, fixture bolts, trim, and stud protectors. EZCarry® narrow wall system complies with all applicable requirements of ASME A112.6.1M up to a 500 lb maximum static load.

NOTES

1. Cut 4" adjustable coupling minimum 'P' dimension obtainable = 2". EZ-Set™ coupling, minimum 'P' dimension obtainable = 4-1/4" or 2-1/16" for 12" NPT.
2. Feet bolted to floor using minimum 1/2" diameter anchors.
3. Rear anchor foot required for secure installation.

ZE1201-NR4 (Single)

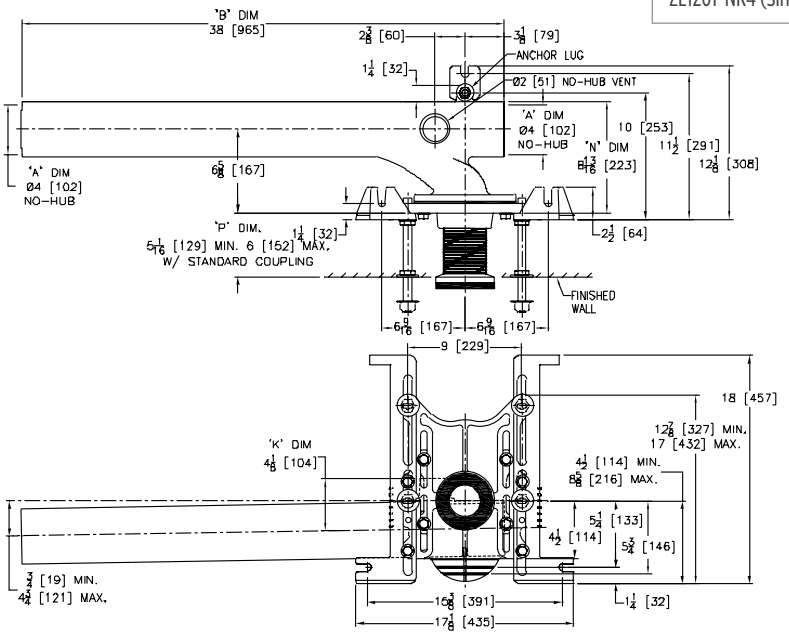

ZE1201-ND4 (Double)

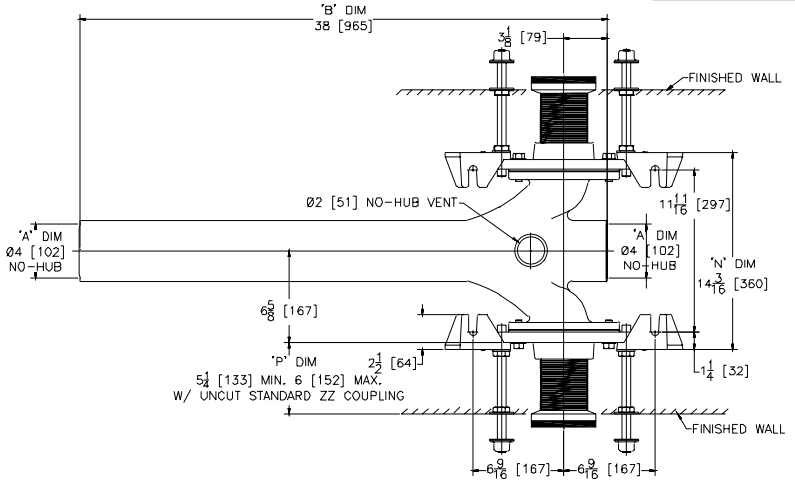

*Regularly furnished unless otherwise specified.

Items designated as Best Sellers are most specified and are generally in stock for shipment.

For additional product information, please visit www.zurn.com

⏲ This symbol denotes a product that is engineered to reduce installation and rework time.

For Additional System Tools See "Z1200 Carrier Tools and Accessories" on page 210

⏲ ZE1201-N EZCARRY® ADJUSTABLE HORIZONTAL SIPHON JET WITH ELONGATED FITTING – NO-HUB SERIES

Product Number	Approximate Weight lb [kg]
ZE1201-NL4	97 [44]
ZE1201-NR4	
ZE1201-ND4	119 [54]

PREFIXES	DESCRIPTION	SINGLE	DOUBLE
ZE1201*	D.C.C.I. Elongated Fitting System with 4″ Adjustable Coupling	Combine with Fitting Type for Pricing	
ZQE1201	D.C.C.I. System with NPT Faceplate, Non-Adjustable Coupling		
FITTING TYPE			
-NL4	4″ No-Hub Left-Hand Inlet with Flow to Right	1,965.00	–
-NR4	4″ No-Hub Right-Hand Inlet with Flow to Left	1,965.00	–
-ND4	4″ No-Hub Back-to-Back Inlet (Double)	–	3,242.00
SUFFIXES			**ADD**
–A	Auxiliary Support Assembly (Required For 'P' Dim. Greater than 18″)	861.00	1,720.00
–CC	Corrosion Resistant Cast Iron Coupling (2-1/4″ thru 12″)	N/C	N/C
⏲ –CE	EZ-SET™ Coupling (6″ or 12″ standard length)	75.00	150.00
	Custom length greater than 12″- Per Inch (Specify Length)	102.00	203.00
–CL	Custom Length Standard Coupling with Integral Test Cap (Specify Length 4″, 8″, 10″ or 12″)	N/C	N/C
⏲ –CS	2-1/4″ Polymer Coupling with Integral Test Cap	N/C	N/C
–G	Galvanized Cast Iron	817.00	1,633.00
–M	Auxiliary Foot Support (Required For 'P' Dim. 7″ thru 18″)	324.00	645.00
⏲ –RYK17	One Piece Unistrut Pre-Fab Foot Support	N/C	N/C
–VP	Vandal-Proof Trim	137.00	270.00
⏲ –45	Finishing Frame for Siphon Jet System	84.00	167.00
⏲ –50	Flush Valve Supply Support for Water Closet	90.00	176.00
			DEDUCT
-F	Floor Mounted, Back Outlet Fixture Support	-158.00	-315.00
BEST SELLERS			**LIST PRICE**
ZE1203-ND4			3,242.00
ZE1203-ND4-CL=12			3,242.00
ZE1203-NL4			1,965.00

Z1200-CPLGWRNCH-3

Items designated as Best Sellers are most specified and are generally in stock for shipment.

⏲ This symbol denotes a product that is engineered to reduce installation and rework time.

For Additional System Tools See "Z1200 Carrier Tools and Accessories" on page 210

**Regularly furnished unless otherwise specified.*

For additional product information, please visit www.zurn.com

⏲ ZE1201-H EZCARRY® ADJUSTABLE HORIZONTAL SIPHON JET WITH ELONGATED FITTING – HUB AND SPIGOT SERIES

Patent Pending

ENGINEERING SPECIFICATION

Zurn ZE1201-H( ) EZCarry® horizontal siphon jet water closet carrier system, with high performance Dura-Coated cast iron main fitting with hydromechanically optimized sweeps, 4" Hub & Spigot connections, 38" barrel for stall to stall direct connection, and extended 2" vent. Corrosion resistant adjustable 3" diameter x 6" coupling with integral test cap, designed to increase flow velocity and line carry, and labor saving Neo-Seal bonded gasket optimize flow performance, while reducing installation steps. Complete system includes an adjustable, gasketed faceplate, floor mounted foot supports with top anchoring pre-fab support base, heavy-duty 1/2" rear anchor tie down, fixture bolts, trim, and stud protectors. EZCarry® narrow wall system complies with all applicable requirements of ASME A112.6.1M up to a 500 lb. maximum static load.

NOTES

1. 4" adjustable coupling minimum "P" dimension obtainable = 2". EZ-Set™ coupling, minimum 'P' dimension obtainable = 4-1/4" or 2-1/16" for 12" NPT.
2. Feet bolted to floor using minimum 1/2" diameter anchors.
3. Rear anchor foot required for secure installation.

ZE1201-HR4 (Single)

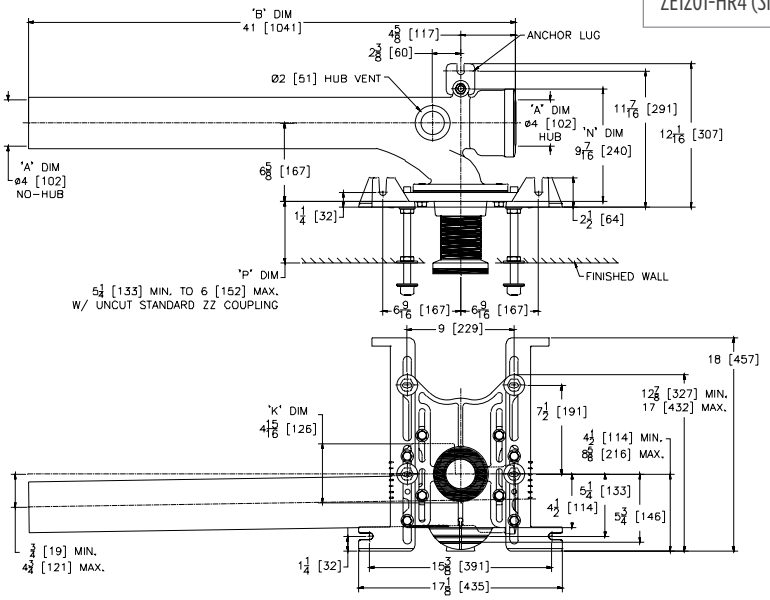

ZE1201-HD4 (Double)

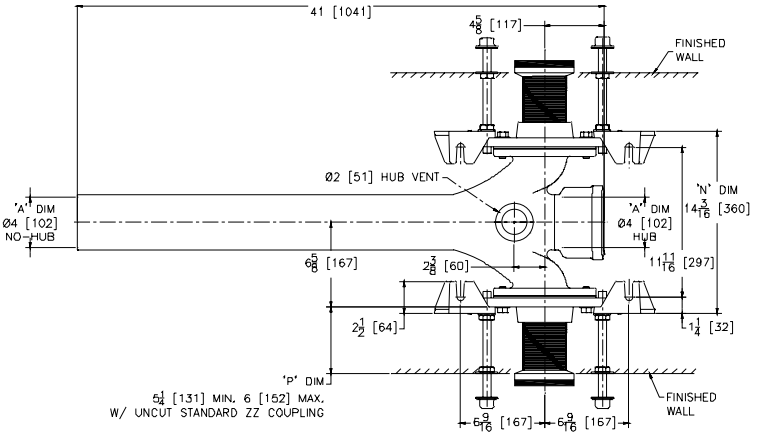

**Regularly furnished unless otherwise specified.*

For additional product information, please visit www.zurn.com

Items designated as Best Sellers are most specified and are generally in stock for shipment.

⏲ This symbol denotes a product that is engineered to reduce installation and rework time.

For Additional System Tools See "Z1200 Carrier Tools and Accessories" on page 210

⏲ ZE1201-H EZCARRY® ADJUSTABLE HORIZONTAL SIPHON JET WITH ELONGATED FITTING – HUB AND SPIGOT SERIES

Product Number	Approximate Weight lb [kg]
ZE1201-HL4	99 [45]
ZE1201-HR4	
ZE1201-HD4	125 [57]

PREFIXES	DESCRIPTION	SINGLE	DOUBLE
ZE1201*	D.C.C.I. System with 4″ Adjustable Coupling	Combine with Fitting Type for Pricing	
ZQE1201	D.C.C.I. System with NPT Faceplate, Non-Adjustable Coupling		
FITTING TYPE			
-HL4	4″ Caulk, Right-Hand Inlet with Flow to Left	2,195.00	–
-HR4	4″ Caulk, Left-Hand Inlet with Flow to Right	2,195.00	–
-HD4	4″ Caulk, Back-to-Back Inlet (Double)	–	3,819.00
SUFFIXES			ADD
–A	Auxiliary Support Assembly (Required For 'P' Dim. Greater than 18″)	861.00	1,720.00
–CC	Corrosion Resistant Cast Iron Coupling (2-1/4″ thru 12″)	N/C	N/C
⏲ –CE	EZ-SET™ Coupling (6″ or 12″ standard length)	75.00	150.00
	Custom length greater than 12″- Per Inch (Specify Length)	102.00	203.00
–CL	Custom Length Standard Coupling with Integral Test Cap (Specify Length 4″, 8″, 10″ or 12″)	N/C	N/C
⏲ –CS	2-1/4″ Polymer Coupling with Integral Test Cap	N/C	N/C
–G	Galvanized Cast Iron	817.00	1,633.00
–M	Auxiliary Foot Support (Required For 'P' Dim. 7″ thru 18″)	324.00	645.00
⏲ –RYK17	One Piece Unistrut Pre-Fab Foot Support	N/C	N/C
–VP	Vandal-Proof Trim	137.00	270.00
⏲ –45	Finishing Frame for Siphon Jet System	84.00	167.00
⏲ –50	Flush Valve Supply Support for Water Closet	90.00	176.00
			DEDUCT
-F	Floor Mounted, Back Outlet Fixture Support	-158.00	-315.00

BEST SELLERS	LIST PRICE
ZE1201-HL4	2,195.00
ZE1201-HR4	2,195.00
ZE1203-HD4	3,819.00
ZE1203-HL4	2,195.00
ZE1203-HR4	2,195.00

Z1200-CPLGWRNCH-3

Items designated as Best Sellers are most specified and are generally in stock for shipment.

⏲ This symbol denotes a product that is engineered to reduce installation and rework time.

For Additional System Tools See "Z1200 Carrier Tools and Accessories" on page 210

**Regularly furnished unless otherwise specified.*

For additional product information, please visit www.zurn.com

⏲ ZF1201-N EZCARRY® HORIZONTAL SIPHON JET ONE-PIECE CARRIER – NO-HUB SERIES

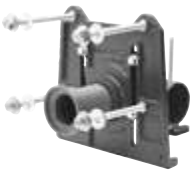

Patent Pending

ENGINEERING SPECIFICATION

Zurn ZF1201-N( ) EZCarry® one-piece combination floor mounted foot/faceplate horizontal siphon jet water closet carrier system, supplied for ( ) rough-in height, features high performance Dura-Coated cast iron main fitting with hydro-mechanically optimized sweep, 4″ no-hub connections, and extended 2″ vent. Corrosion resistant adjustable 3″ diameter x 6″ coupling with integral test cap is designed to increase flow velocity and line carry. Labor saving Neo-Seal bonded gasket optimize flow performance, while reducing installation steps. Complete system includes one-piece combination foot/faceplate, heavy-duty 1/2″ rear anchor tie down, fixture bolts, trim and stud protectors. EZCarry® one-piece combination floor mounted foot/faceplate system complies with all applicable requirements of ASME A112.6.1M up to a 500 lb maximum static load.

NOTES

1. Cut 4″ adjustable coupling minimum "P" dimension obtainable = 2″. EZ-Set™ coupling, minimum 'P' dimension obtainable = 4-1/4″ or 2-1/16″ for 12″ NPT.
2. Faceplate bolted to floor using minimum 1/2″ diameter anchors.
3. Rear anchor assembly required for secure installation.

Product Number	Dimensions in inches [mm] A	Dimensions in inches [mm] B	Approximate Weight lb [kg]
ZF1201-NL4-F55	5-1/2 [140]	13-7/8 [352]	72 [33]
ZF1201-NR4-F55			
ZF1201-ND4-F55			93 [42]
ZF1201-NL4-F75	7-1/2 [191]	15-7/8 [403]	76 [34]
ZF1201-NR4-F75			
ZF1201-ND4-F75			100 [45]

PREFIXES	DESCRIPTION	SINGLE	DOUBLE
ZF1201*	D.C.C.I. System with 4″ Adjustable Coupling	Combine with Fitting Type for Pricing	
ZQF1201	D.C.C.I. System with NPT Faceplate Non-Adjustable Coupling		
FITTING TYPE			
-NL4-F55	4″ No-Hub Left-Hand Inlet with Flow to Right w/ 5-1/2″ Non-Adjustable Rough-In Height	1,584.00	–
-NR4-F55	4″ No-Hub Right Hand Inlet with Flow to Left w/ 5-1/2″ Non-Adjustable Rough-In Height	1,584.00	–
-ND4-F55	4″ No-Hub Back-to-back Double Inlet with 5-1/2″ Non-Adjustable Rough-In Height	–	2,965.00
-NL4-F75	4″ No-Hub Left Hand Inlet with Flow to Right w/ 7-1/2″ Non-Adjustable Rough-In Height	1,584.00	–
-NR4-F75	4″ No-Hub Right Hand Inlet with Flow to Left w/ 7-1/2″ Non-Adjustable Rough-In Height	1,584.00	–
-ND4-F75	4″ No-Hub Back-to-back Double Inlet with 7-1/2″ Non-Adjustable Rough-In Height	–	2,965.00
SUFFIXES			**ADD**
–A	Auxiliary Support Assembly (Required For 'P' Dim. Greater than 18″)	861.00	1,720.00
–CC	Corrosion Resistant Cast Iron Coupling (2-1/4″ thru 12″)	N/C	N/C
⏲ –CE	EZ-SET™ Coupling (6″ or 12″ standard length)	75.00	150.00
	Custom length greater than 12″- Per Inch (Specify Length)	102.00	203.00
–CL	Custom Length Standard Coupling with Integral Test Cap (Specify Length 4″, 8″, 10″ or 12″)	N/C	N/C
⏲ –CS	2-1/4″ Polymer Coupling with Integral Test Cap	N/C	N/C
–G	Galvanized Cast Iron	817.00	1,633.00
–JC	2″ Auxiliary Inlet with 1/8″ Bend	365.00	–
–M	Auxiliary Foot Support (Required For 'P' Dim. 10″ thru 18″)	324.00	645.00
–VP	Vandal-Proof Trim	137.00	270.00
⏲ –45	Finishing Frame for Siphon Jet System	84.00	167.00
⏲ –50	Flush Valve Supply Support for Water Closet	90.00	176.00
			DEDUCT
-F	Floor Mounted, Back Outlet Fixture Support	-158.00	-315.00

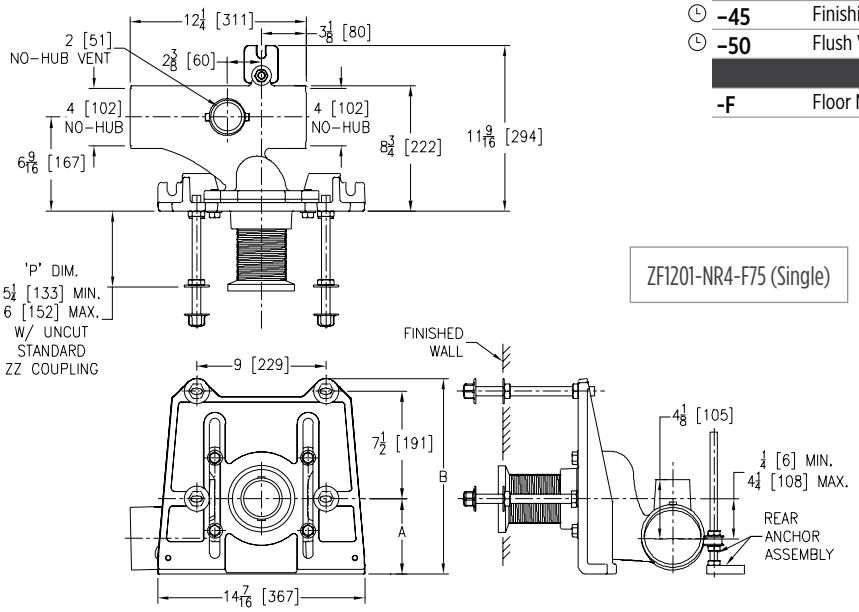

ZF1201-NR4-F75 (Single)

*Regularly furnished unless otherwise specified.

Items designated as Best Sellers are most specified and are generally in stock for shipment.

For additional product information, please visit www.zurn.com

⏲ This symbol denotes a product that is engineered to reduce installation and rework time.

For Additional System Tools See "Z1200 Carrier Tools and Accessories" on page 210

⏲ ZN1201-N EZCARRY® ADJUSTABLE HORIZONTAL SIPHON JET – NO-HUB NARROW WALL SYSTEM (9-3/8" DEPTH FRONT TO BACK)

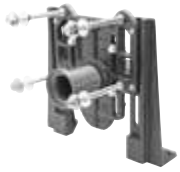

Patent Pending

ENGINEERING SPECIFICATION

Zurn ZN1201-N( )4 EZCarry® narrow wall horizontal siphon jet water closet carrier system features high performance Dura-Coated cast iron main fitting with hydro-mechanically optimized sweep, 4" no-hub connections, and extended 2" vent. Corrosion resistant adjustable 3" diameter x 6" coupling with integral test cap is designed to increase flow velocity and line carry. Labor saving Neo-Seal bonded gasket optimize flow performance while reducing installation steps. Complete system includes an adjustable, gasketed faceplate, floor mounted foot supports, fixture bolts, trim, and stud protectors. EZCarry® narrow wall system complies with all applicable requirements of ASME A112.6.1M up to a 500 lb maximum static load.

NOTES

1. Cut 4" adjustable coupling minimum 'P' dimension obtainable = 1-1/4".
2. Carrier floor anchors must each be able to withstand a pull-out force of 1741 lb.
3. Pull-out forces are calculated values with standard coupling assembly. No safety factor has been applied. See Form #C38 for more information.

Product Number	Approximate Weight lb [kg]
ZN1201-NL4	75 [34]
ZN1201-NR4	
ZN1201-ND4	140 [64]

PREFIXES	DESCRIPTION	SINGLE	DOUBLE
ZN1201*	D.C.C.I. System with 4" Adjustable Coupling	**Combine with Fitting Type for Pricing**	
FITTING TYPE			
-NL4	4" No-Hub Left-Hand Inlet w/Flow to Right for Narrow Wall	**1,898.00**	**–**
-NR4	4" No-Hub Right-Hand Inlet w/Flow to Left for Narrow Wall	**1,898.00**	**–**
-ND4	4" No-Hub Back-to-Back Inlet (Double for Narrow Wall)	**–**	**3,420.00**
SUFFIXES			**ADD**
–CC	Corrosion Resistant Cast Iron Coupling (2-1/4" thru 12")	**N/C**	**N/C**
⏲ **–CS**	2-1/4" Polymer Coupling with Integral Test Cap	**N/C**	**N/C**
–G	Galvanized Cast Iron	**817.00**	**1,633.00**
–JC	2" Auxiliary Inlet with 1/8" Bend	**365.00**	**–**
–VP	Vandal-Proof Trim	**137.00**	**270.00**
⏲ **–50**	Flush Valve Supply Support for Water Closet	**90.00**	**176.00**

BEST SELLERS	LIST PRICE
ZN1201-ND4	**3,420.00**
ZN1201-NL4	**1,898.00**
ZN1201-NR4	**1,898.00**

ZN1201-NR4 (Single)

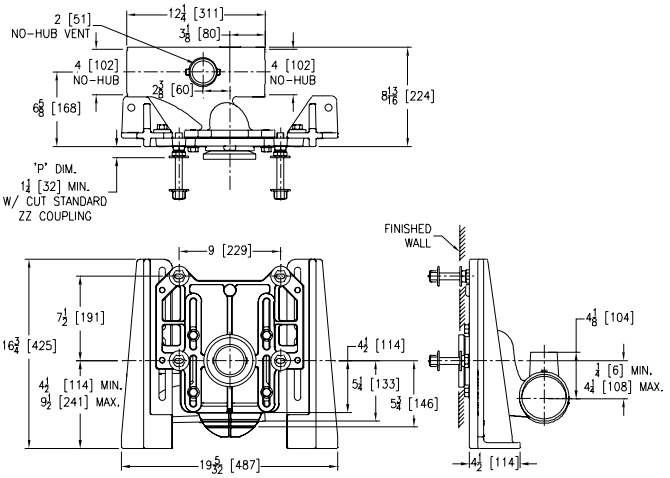

ZN1201-ND4 (Double)

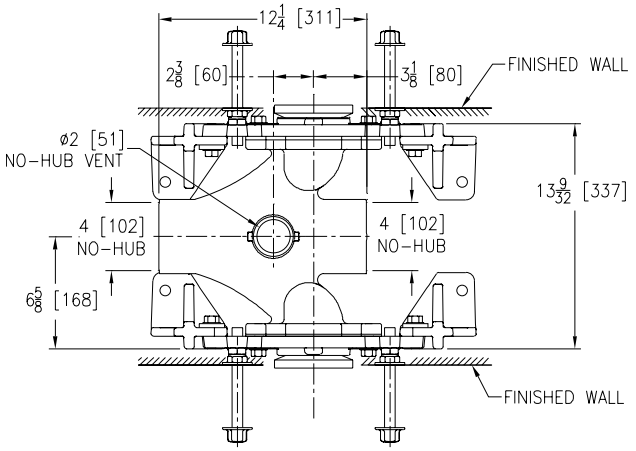

Items designated as Best Sellers are most specified and are generally in stock for shipment.

⏲ *This symbol denotes a product that is engineered to reduce installation and rework time.*

For Additional System Tools See "Z1200 Carrier Tools and Accessories" on page 210

**Regularly furnished unless otherwise specified.*

For additional product information, please visit www.zurn.com

Z1202-N EZCARRY® ADJUSTABLE VERTICAL HIGH PERFORMANCE SIPHON JET – NO-HUB SERIES

Patented

ENGINEERING SPECIFICATION

Zurn Z1202-( )N EZCarry® vertical siphon jet water closet carrier system features high performance waterway and 4" no-hub connections. System includes Dura-Coated cast iron right-hand, left-hand, or double main fitting with hydro-mechanically optimized sweep and extended 2" vent, adjustable gasketed faceplate, floor mounted pre-fab slotted foot supports with top anchoring pre-fab support base, heavy-duty 1/2" rear anchor tie down, fixture bolts, trim, stud protectors, bonded Neo-Seal gasket, and corrosion resistant adjustable 3" diameter x 6" coupling with integral test cap designed to increase flow velocity and line carry. EZCarry system complies with the requirements of ASME A112.6.1M, up to a 500 lb static load rating.

NOTES

1. Cut 4" adjustable coupling minimum "P" dimension obtainable = 2". EZ-Set™ coupling, minimum 'P' dimension obtainable = 4-1/4" or 2-1/16" for 12" NPT.
2. Feet bolted to floor using minimum 1/2" diameter anchors and back slots on carrier feet.
3. Rear anchor foot required for secure installation.
4. 2" no-hub vent connection regularly furnished on right-hand side. Left-hand available when specified (Suffix –VL).
5. Auxiliary inlet available right (-JR) or left (-JL) or both sides (-JJ) when specified.

Z1202-N4 (Single)

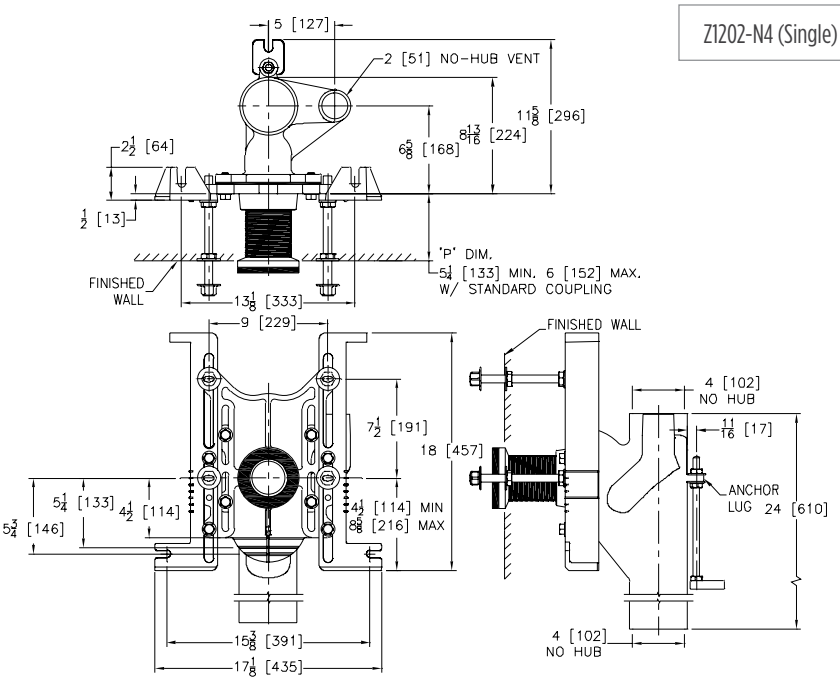

Z1202-ND4 (Double)

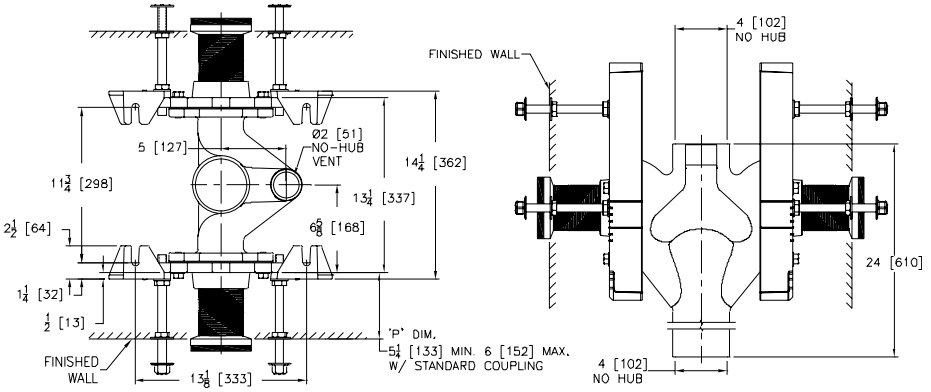

*Regularly furnished unless otherwise specified.

For additional product information, please visit www.zurn.com

Items designated as Best Sellers are most specified and are generally in stock for shipment.

This symbol denotes a product that is engineered to reduce installation and rework time.

For Additional System Tools See "Z1200 Carrier Tools and Accessories" on page 210

Z1202-N EZCARRY® ADJUSTABLE VERTICAL HIGH PERFORMANCE SIPHON JET – NO-HUB SERIES

Product Number	Dimensions in inches [mm]								Approx. Wt. lb [kg]
	A	B	D	E	H	J	K	N	
Z1202-N4	4 [102]	-	5 [127]	6-9/16 [167]	-	24 [610]	-	8-3/4	73 [33]
Z1202-ND4		-			-		-	13-1/8	119 [54]
Z1202-1NL4		4 [102]			7-9/16 [192]		15-1/2 [394]	8-3/4	74 [34]
Z1202-1NR4									
Z1202-1ND4								13-1/8	120 [54]
Z1202-2N4								8-3/4	78 [35]
Z1202-2ND4								13-1/18	120 [54]

PREFIXES	DESCRIPTION	SINGLE	DOUBLE
Z1202*	D.C.C.I. System with 4″ Adjustable Coupling	Combine with Fitting Type for Pricing	
ZQ1202	D.C.C.I. System with NPT Faceplate Non-Adjustable Coupling		
FITTING TYPE			
-N4	4″ No-Hub Stack, Single Inlet, 2″ Right-Hand Vent	1,795.00	–
-ND4	4″ No-Hub Stack, Double Inlets, 2″ Vent	–	3,175.00
-1NL4	4″ No-Hub Stack, Single Inlet, 4″ Left-Hand Side Inlet, 2″ Left-Hand Vent	2,105.00	–
-1NR4	4″ No-Hub Stack, Single Inlet, 4″ Right-Hand Side Inlet, 2″ Right-Hand Vent	2,105.00	–
-1ND4	4″ No-Hub Stack, Double Inlets, 4″ Side Inlet, 2″ Vent	–	3,472.00
-2N4	4″ No-Hub Stack, Single Inlet, Two 4″ Side Inlets, 2″ Right-Hand Vent	2,409.00	–
-2ND4	4″ No-Hub Stack, Double Inlets, Two 4″ Side Inlets, 2″ Vent	–	3,780.00
SUFFIXES			**ADD**
–A	Auxiliary Support Assembly (Required For 'P' Dim. Greater than 18″)	861.00	1,720.00
–CC	Corrosion Resistant Cast Iron Coupling (2-1/4″ thru 12″)	N/C	N/C
–CE	EZ-SET™ Coupling (6″ or 12″ standard length)	75.00	150.00
	Custom length greater than 12″ - Per Inch (Specify Length)	102.00	203.00
–CL	Custom Length Standard Coupling with Integral Test Cap (Specify Length 4″, 8″, 10″ or 12″)	N/C	N/C
–CS	2-1/4″ Polymer Coupling with Integral Test Cap	N/C	N/C
–G	Galvanized Cast Iron	817.00	1,633.00
–JJ	Two 2″ Auxiliary Inlets (N4, ND4 Only)	724.00	724.00
–JL	2″ Left-Hand Auxiliary Inlet (N4, ND4 Only)	365.00	365.00
–JR	2″ Right-Hand Auxiliary Inlet (N4, ND4 Only)	365.00	365.00
–M	Auxiliary Foot Support (Required For 'P' Dim. 7″ thru 18″)	324.00	645.00
–RYK17	One Piece Unistrut Pre-Fab Foot Support	N/C	N/C
–VL	Left-Hand Vent Connection (N4, 1NR4, 2N4 Only)	N/C	N/C
–VP	Vandal-Proof Trim	137.00	270.00
–45	Finishing Frame for Siphon Jet System	84.00	167.00
–50	Flush Valve Supply Support for Water Closet	90.00	176.00
			DEDUCT
–F	Floor Mounted, Back Outlet Fixture Support	-158.00	-315.00

BEST SELLERS	LIST PRICE
Z1202-1NL4	2,105.00
Z1202-1NR4	2,105.00
Z1202-1NR4-CL=12	2,105.00
Z1202-2N4	2,409.00
Z1202-2N4-CL=12	2,409.00
Z1202-2ND4	3,780.00
Z1202-N4	1,795.00
Z1202-N4-CL=12	1,795.00
Z1202-ND4	3,175.00

Z1200-EZCUTGUIDE†

†Image showing old style carrier

Z1200-CPLGWRNCH-3

Items designated as Best Sellers are most specified and are generally in stock for shipment.

This symbol denotes a product that is engineered to reduce installation and rework time.

For Additional System Tools See "Z1200 Carrier Tools and Accessories" on page 210

**Regularly furnished unless otherwise specified.*

For additional product information, please visit www.zurn.com

Z1202-H EZCARRY® ADJUSTABLE VERTICAL HIGH PERFORMANCE SIPHON JET – HUB AND SPIGOT SERIES

Patented

ENGINEERING SPECIFICATION

Zurn Z1202-( )H EZCarry® vertical siphon jet water closet carrier system features a high performance waterway and 4" hub and spigot connections. System includes Dura-Coated cast iron right-hand, left-hand, or double main fitting with hydro-mechanically optimized sweep and extended 2" vent, adjustable gasketed faceplate, floor mounted pre-fab slotted foot supports with top anchoring pre-fab support base, heavy-duty 1/2" rear anchor tie down, fixture bolts, trim, stud protectors, bonded Neo-Seal gasket, and corrosion resistant adjustable 3" diameter x 6" coupling with integral test cap designed to increase flow velocity and line carry. EZCarry system complies with the requirements of ASME A112.6.1M, up to a 500 lb static load rating.

NOTES

1. Cut 4" adjustable coupling minimum "P" dimension obtainable = 2". EZ-Set™ coupling, minimum 'P' dimension obtainable = 4-1/4" or 2-1/16" for 12" NPT.
2. Feet bolted to floor using minimum 1/2" diameter anchors and back slots on carrier feet.
3. Rear anchor foot required for secure installation.
4. 2" Hub & Spigot vent connection regularly furnished on right-hand side. Left-hand available when specified (Suffix –VL).
5. Auxiliary inlet available right (-JR) or left (-JL) or both sides (-JJ) when specified.

Z1202-H4 (Single)

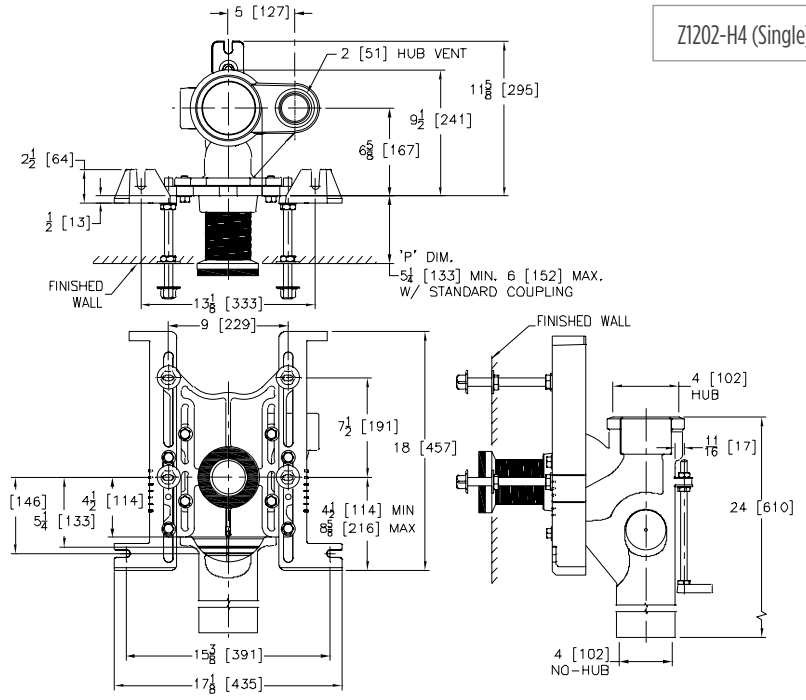

Z1202-HD4 (Double)

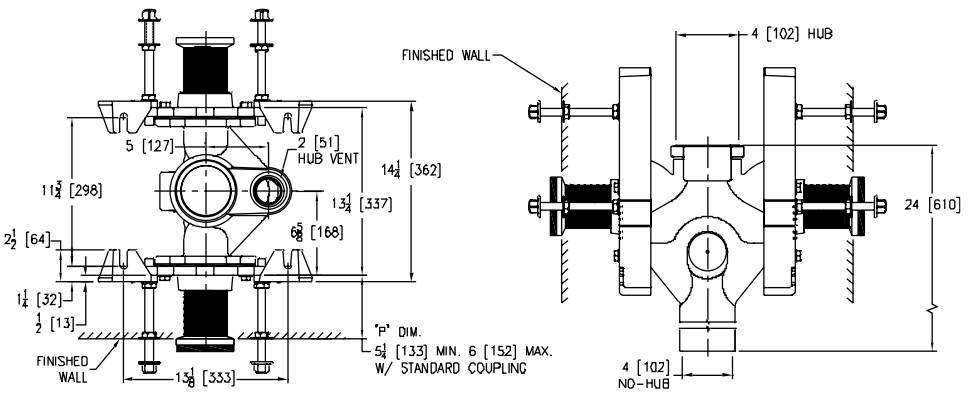

*Regularly furnished unless otherwise specified.

For additional product information, please visit www.zurn.com

Items designated as Best Sellers are most specified and are generally in stock for shipment.

This symbol denotes a product that is engineered to reduce installation and rework time.

For Additional System Tools See "Z1200 Carrier Tools and Accessories" on page 210

Z1202-H EZCARRY® ADJUSTABLE VERTICAL HIGH PERFORMANCE SIPHON JET – HUB AND SPIGOT SERIES

Product Number	Dimensions in inches [mm]								Approx. Wt. lb [kg]
	A	B	D	E	H	J	K	N	
Z1202-H4	4 [102]	-		6-9/16 [167]	-	24 [610]	-	9-7/16 [240]	79 [36]
Z1202-HD4		-		6/11/16 [170]	-		-	13-3/8 [340]	125 [57]
Z1202-1HL4		4 [102]		6-9/16[167]	7-9/16 [192]		15-1/2 [394]	9-7/16 [240]	88 [40]
Z1202-1HR4									
Z1202-1HD4				6-11/16 [170]				13-3/8 [340]	132 [60]
Z1202-2H4				6-9/16 [167]				9-7/16 [240]	104 [47]
Z1202-2HD4				6-11/16 [170]				13-3/8 [340]	147 [67]

PREFIXES	DESCRIPTION	SINGLE	DOUBLE
Z1202*	D.C.C.I. System with 4″ Adjustable Coupling	Combine with Fitting Type for Pricing	
ZQ1202	D.C.C.I. System with NPT Faceplate Non-Adjustable Coupling		
FITTING TYPE			
-H4	4″ Hub and Spigot Stack, Single Inlet, 2″ Right-Hand Vent	1,930.00	–
-HD4	4″ Hub and Spigot Stack, Double Inlets, 2″ Vent	–	3,337.00
-1HD4	4″ Hub and Spigot Stack, Double Inlets, 4″ Side Inlet, 2″ Vent	–	3,648.00
-1HL4	4″ Hub and Spigot Stack, Single Inlet, 4″ Left-Hand Side Inlet, 2″ Left-Hand Vent	2,241.00	–
-1HR4	4″ Hub and Spigot Stack, Single Inlets, 4″ Right-Hand Side Inlet, 2″ Right-Hand Vent	2,241.00	–
-2H4	4″ Hub and Spigot Stack, Single Inlet, Two 4″ Side Inlets, 2″ Right-Hand Vent	2,555.00	–
-2HD4	4″ Hub and Spigot Stack, Double Inlets, Two 4″ Side Inlets, 2″ Vent	–	3,963.00
SUFFIXES			**ADD**
–A	Auxiliary Support Assembly (Required For 'P' Dim. Greater than 18″)	861.00	1,720.00
–CC	Corrosion Resistant Cast Iron Coupling (2-1/4″ thru 12″)	N/C	N/C
–CE	EZ-SET™ Coupling (6″ or 12″ standard length)	75.00	150.00
	Custom length greater than 12″- Per Inch (Specify Length)	102.00	203.00
–CL	Custom Length Standard Coupling with Integral Test Cap (Specify Length 4″, 8″, 10″ or 12″)	N/C	N/C
–CS	2-1/4″ Polymer Coupling with Integral Test Cap	N/C	N/C
–G	Galvanized Cast Iron	817.00	1,633.00
–JJ	Two 2″ Auxiliary Inlets (H4, HD4 Only)	724.00	724.00
–JL	2″ Left-Hand Auxiliary Inlet (H4, HD4, 1HR4 Only)	365.00	365.00
–JR	2″ Right-Hand Auxiliary Inlet (H4, HD4, 1HR4 Only)	365.00	365.00
–M	Auxiliary Foot Support (Required For 'P' Dim. 7″ thru 18″)	324.00	645.00
–RYK17	One Piece Unistrut Pre-Fab Foot Support	N/C	N/C
–VL	Left-Hand Vent Connection (H4, 1HR4, 2H4 Only)	N/C	N/C
–VP	Vandal-Proof Trim	137.00	270.00
–45	Finishing Frame for Siphon Jet System	84.00	167.00
–50	Flush Valve Supply Support for Water Closet	90.00	176.00
			DEDUCT
–F	Floor Mounted, Back Outlet Fixture Support	-158.00	-315.00

Z1200-EZCUTGUIDE†

†Image showing old style carrier

Z1200-CPLGWRNCH-3

Items designated as Best Sellers are most specified and are generally in stock for shipment.

This symbol denotes a product that is engineered to reduce installation and rework time.

For Additional System Tools See "Z1200 Carrier Tools and Accessories" on page 210

**Regularly furnished unless otherwise specified.*

For additional product information, please visit www.zurn.com

Z1202-N-XB EZCARRY® BARIATRIC CARRIER – 1000 LB ADJUSTABLE VERTICAL SIPHON JET – NO-HUB SERIES

Patented

ENGINEERING SPECIFICATION

Zurn Z1202-N( )-XB EZCarry® bariatric vertical siphon jet water closet carrier system features high performance Dura-Coated cast iron main fitting with hydromechanically optimized sweep, 4″ no-hub connections, and extended 2″ vent. Corrosion resistant adjustable cast iron coupling is designed to increase flow velocity and line carry. Labor saving Neo-Seal bonded gasket optimizes flow performance, while reducing installation steps. Complete system includes an adjustable, gasketed faceplate, floor mounted foot supports, rigid support frame assembly, extra heavy-duty 1/2″ rear anchor tie down, fixture bolts, trim, and stud protectors. EZCarry® XB system complies with all applicable requirements of ASME A112.6.1M up to a 1000 lb maximum static load.

NOTES

1. Cut 4″ adjustable coupling minimum 'P' dimension obtainable = 3″.
2. Feet bolted to floor using minimum 1/2″ diameter anchors.
3. Rear anchor foot required for secure installation.
4. Floor anchors must each be able to withstand a pull-out force of 748 lb.
5. Pull-out forces are calculated values with standard coupling assembly. No safety factor has been applied. See Form #C38 for more information.
6. 2″ no-hub vent connection regularly furnished on right-hand side. Left hand available when specified (Suffix -VL).
7. Auxiliary inlet available right (-JR) or left (-JL) or both sides (-JJ) when specified.

Product Number	Approximate Weight lb [kg]
Z1202-N4-XB	115 [52]
Z1202-ND4-XB	188 [85]

PREFIXES	DESCRIPTION	SINGLE	DOUBLE
Z1202*	D.C.C.I. System with 4″ Adjustable Coupling	Combine with Fitting Type for Pricing	
FITTING TYPE			
-N4-XB	4″ No-Hub Stack, Single Inlet, 2″ Right-Hand Vent	5,101.00	–
-ND4-XB	4″ No-Hub Stack, Back-to-Back Inlet (Double), 2″ Right-Hand Vent	–	9,845.00
SUFFIXES			**ADD**
–CC	Corrosion Resistant Cast Iron Coupling (2-1/4″ thru 12″)	N/C	N/C
–G	Galvanized Cast Iron	817.00	1,633.00
–JJ	Two 2″ Auxiliary Inlets	724.00	724.00
–JL	2″ Left-Hand Auxiliary Inlet	365.00	365.00
–JR	2″ Right-Hand Auxiliary Inlet	365.00	365.00
–VL	Left-Hand Vent Connection	N/C	N/C
–VP	Vandal-Proof Trim	137.00	270.00
◷ –50	Flush Valve Supply Support for Water Closet	90.00	176.00

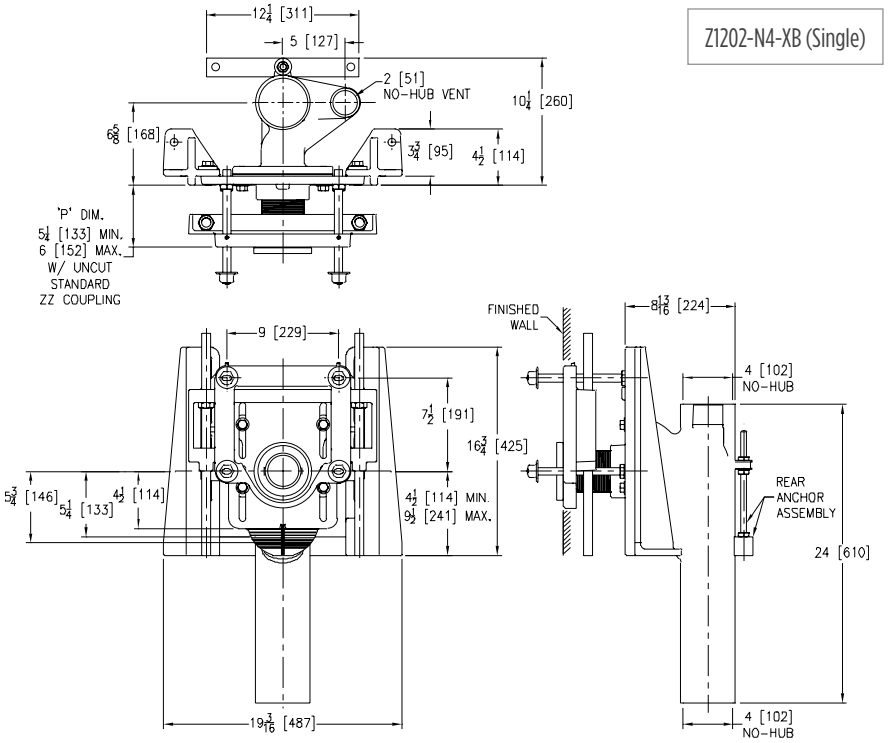

Z1202-N4-XB (Single)

*Regularly furnished unless otherwise specified.

Items designated as Best Sellers are most specified and are generally in stock for shipment.

For additional product information, please visit www.zurn.com

◷ *This symbol denotes a product that is engineered to reduce installation and rework time.*

For Additional System Tools See "Z1200 Carrier Tools and Accessories" on page 210

Z1202-N-XH EZCARRY® EXTRA HEAVY-DUTY 750 LB ADJUSTABLE VERTICAL SIPHON JET – NO-HUB SERIES

Patented

ENGINEERING SPECIFICATION

Zurn Z1202-N( )-XH EZCarry® extra heavy-duty vertical siphon jet water closet carrier system features high performance Dura-Coated cast iron main fitting with hydro-mechanically optimized sweep, 4" no-hub connections, and extended 2" vent. Corrosion resistant adjustable 3" diameter x 6" coupling with integral test cap is designed to increase flow velocity and line carry. Labor saving Neo-Seal bonded gasket optimizes flow performance, while reducing installation steps. Complete system includes an adjustable, gasketed faceplate, floor mounted foot supports, extra heavy-duty 1/2" rear anchor tie down, fixture bolts, trim, and stud protectors. EZCarry® XH system complies with all applicable requirements of ASME A112.6.1M up to a 750 lb maximum static load.

NOTES

1. Cut 4" adjustable coupling minimum 'P' dimension obtainable = 2". EZ-Set™ coupling, minimum 'P' dimension obtainable = 4-1/4" or 2-1/16" for 12" NPT.
2. Feet bolted to floor using minimum 1/2" diameter anchors.
3. Rear anchor assembly required for secure installation.
4. Floor anchors must each be able to withstand a pull-out force of 820 lb.
5. Pull-out forces are calculated values with standard coupling assembly. No safety factor has been applied. See Form #C38 for more information.
6. 2" no-hub vent connection regularly furnished on right-hand side. Left hand available when specified (Suffix -VL).
7. Auxiliary inlet available right (-JR) or left (-JL) or both sides (-JJ) when specified.

Product Number	Approximate Weight lb [kg]
Z1202-N4-XH	99 [45]
Z1202-ND4-XH	156 [71]

PREFIXES	DESCRIPTION	SINGLE	DOUBLE
Z1202*	D.C.C.I. System with 4" Adjustable Coupling	Combine with Fitting Type for Pricing	
ZQ1202	D.C.C.I. System with NPT Faceplate Non-Adjustable Coupling		
FITTING TYPE			
-N4-XH	4" No-Hub Stack, Single Inlet, 2" Right-Hand Vent	3,706.00	–
-ND4-XH	4" No-Hub Stack, Back-to-Back Inlet (Double), 2" Right-Hand Vent	–	7,154.00
SUFFIXES			**ADD**
–CC	Corrosion Resistant Cast Iron Coupling (2-1/4" thru 12")	N/C	N/C
⏲ –CE	EZ-SET™ Coupling (6" or 12" standard length)	75.00	150.00
	Custom length greater than 12"- Per Inch (Specify Length)	102.00	203.00
–CL	Custom Length Standard Coupling with Integral Test Cap (Specify Length 4", 8", 10" or 12")	N/C	N/C
⏲ –CS	2-1/4" Polymer Coupling with Integral Test Cap	N/C	N/C
–G	Galvanized Cast Iron	817.00	1,633.00
–JJ	Two 2" Auxiliary Inlets	724.00	724.00
–JL	2" Left-Hand Auxiliary Inlet	365.00	365.00
–JR	2" Right-Hand Auxiliary Inlet	365.00	365.00
–VL	Left-Hand Vent Connection (H4, 1HR4, 2H4 Only)	N/C	N/C
–VP	Vandal-Proof Trim	137.00	270.00
⏲ –50	Flush Valve Supply Support for Water Closet	90.00	176.00

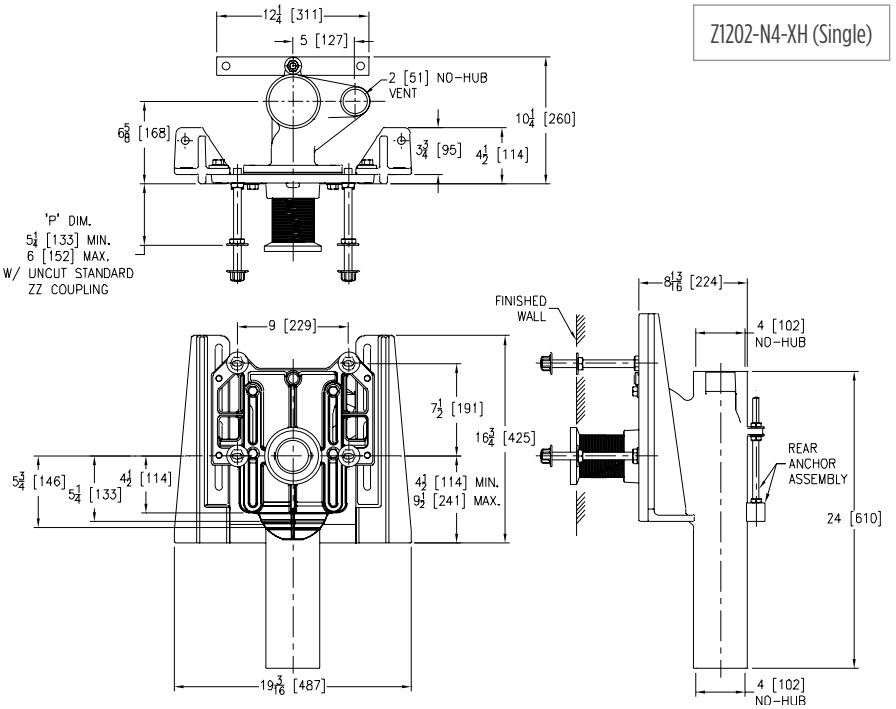

Items designated as Best Sellers are most specified and are generally in stock for shipment.

⏲ This symbol denotes a product that is engineered to reduce installation and rework time.

For Additional System Tools See "Z1200 Carrier Tools and Accessories" on page 210

**Regularly furnished unless otherwise specified.*

For additional product information, please visit www.zurn.com

ZF1202-N EZCARRY® VERTICAL SIPHON JET ONE-PIECE CARRIER – NO-HUB SERIES

Patent Pending

ENGINEERING SPECIFICATION

Zurn ZF1202-N( ) EZCarry® one-piece combination floor mounted foot/faceplate horizontal siphon jet water closet carrier system, supplied for ( ) rough-in height, features high performance Dura-Coated cast iron main fitting with hydro-mechanically optimized sweep, 4″ no-hub connections, and extended 2″ vent. Corrosion resistant adjustable 3″ diameter x 6″ coupling with integral test cap is designed to increase flow velocity and line carry. Labor saving Neo-Seal bonded gasket optimizes flow performance, while reducing installation steps. Complete system includes one-piece combination foot/faceplate, heavy-duty 1/2″ rear anchor tie down, fixture bolts, trim, and stud protectors. EZCarry® one-piece combination floor mounted foot/faceplate system complies with all applicable requirements of ASME A112.6.1M up to a 500 lb maximum static load.

NOTES

1. Cut 4″ adjustable coupling minimum 'P' dimension obtainable = 2″. EZ-Set™ coupling, minimum 'P' dimension obtainable = 4-1/4″ or 2-1/16″ for 12″ NPT.
2. Feet bolted to floor using minimum 1/2″ diameter anchors.
3. Rear anchor assembly required for secure installation (not on ND4).
4. 2″ no-hub vent conection regularly furnished on right-hand side. Left-hand available when specified (Suffix -VL).
5. Auxiliary inlet available right (-JR) or left (-JL) or both sides (-JJ).

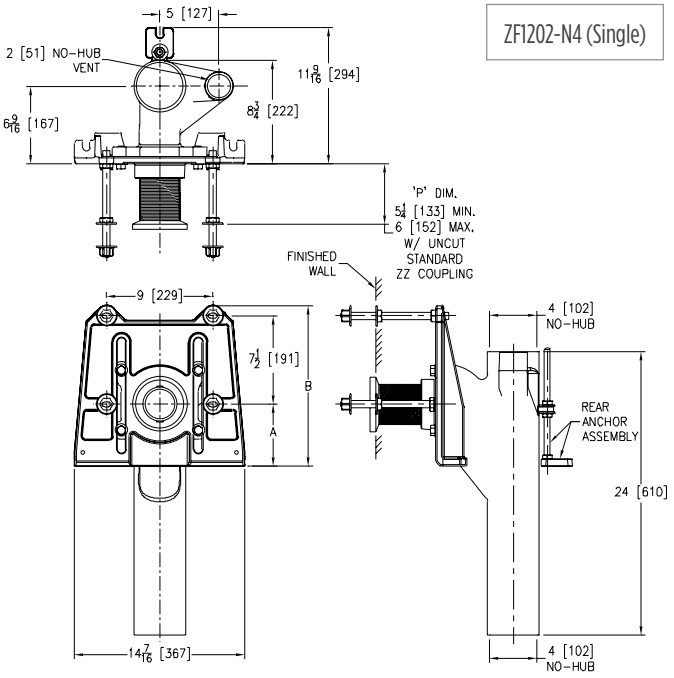

ZF1202-N4 (Single)

Product Number	Dimensions in inches [mm] A	Dimensions in inches [mm] B	Approximate Weight lb [kg]
ZF1202-N4-F55	5-1/2 [140]	13-7/8 [352]	87 [39]
ZF1202-ND4-F55			107 [49]
ZF1202-N4-F75	7-1/2 [191]	15-7/8 [403]	91 [41]
ZF1202-ND4-F75			115 [52]

PREFIXES	DESCRIPTION	SINGLE	DOUBLE
ZF1202*	D.C.C.I. System with 4″ Adjustable Coupling	Combine with Fitting Type for Pricing	
ZQF1202	D.C.C.I. System with NPT Faceplate Non-Adjustable Coupling		
FITTING TYPE			
-N4-F55	4″ No-Hub Right-Hand Inlet with Flow to Left with 5-1/2″ Non-Adjustable Rough-In Height	1,766.00	–
-ND4-F55	4″ No-Hub Back-to-Back Inlet (Double), with 5-1/2″ Non-Adjustable Rough-In Height	–	3,118.00
-N4-F75	4″ No-Hub Left-Hand Inlet with Flow to Right with 7-1/2″ Non-Adjustable Rough-In Height	1,766.00	–
-ND4-F75	4″ No-Hub Back-to-Back Inlet (Double), with 7-1/2″ Non-Adjustable Rough-In Height	–	3,118.00
SUFFIXES			**ADD**
–A	Auxiliary Support Assembly (Required For 'P' Dim. Greater than 18″)	861.00	861.00
–CC	Corrosion Resistant Cast Iron Coupling (2-1/4″ thru 12″)	N/C	N/C
–CE	EZ-SET™ Coupling (6″ or 12″ standard length)	75.00	150.00
	Custom length greater than 12″- Per Inch (Specify Length)	102.00	203.00
–CL	Custom Length Standard Coupling with Integral Test Cap (Specify Length 4″, 8″, 10″ or 12″)	N/C	N/C
–CS	2-1/4″ Polymer Coupling with Integral Test Cap	N/C	N/C
–G	Galvanized Cast Iron	817.00	1,633.00
–JJ	Two 2″ Auxiliary Inlets	724.00	724.00
–JL	2″ Left-Hand Auxiliary Inlet	365.00	365.00
–JR	2″ Right-Hand Auxiliary Inlet	365.00	365.00
–M	Auxiliary Foot Support (Required For 'P' Dim. 10″ thru 18″)	324.00	645.00
–VL	Left-Hand Vent Connection	N/C	N/C
–VP	Vandal-Proof Trim	137.00	270.00
–45	Finishing Frame for Siphon Jet System (For Blowout System specify -45-B)	84.00	167.00
–50	Flush Valve Supply Support for Water Closet	90.00	176.00

*Regularly furnished unless otherwise specified.

Items designated as Best Sellers are most specified and are generally in stock for shipment.

For additional product information, please visit www.zurn.com

This symbol denotes a product that is engineered to reduce installation and rework time.

For Additional System Tools See "Z1200 Carrier Tools and Accessories" on page 210

⏲ ZN1202-N EZCARRY® ADJUSTABLE VERTICAL SIPHON JET – NO-HUB NARROW WALL SYSTEM

Patent Pending

ENGINEERING SPECIFICATION

Zurn ZN1202-N( )4 EZCarry® narrow wall vertical siphon jet water closet carrier system features high performance Dura-Coated cast iron main fitting with hydromechanically optimized sweep, 4″ no-hub connections, and extended 2″ vent. Corrosion resistant adjustable 3″ diameter x 6″ coupling with integral test cap is designed to increase flow velocity and line carry. Labor saving Neo-Seal bonded gasket optimizes flow performance while reducing installation steps. Complete system includes an adjustable, gasketed faceplate, floor mounted foot supports, fixture bolts, trim, and stud protectors. EZCarry® narrow wall system complies with all applicable requirements of ASME A112.6.1M up to a 500 lb maximum static load.

NOTES

1. Cut 4″ adjustable coupling minimum 'P' dimension obtainable = 1-1/4″.
2. Carrier floor anchors must each be able to withstand a pull-out force of 1741 lb.
3. Pull-out forces are calculated values with standard coupling assembly. No safety factor has been applied. See Form #C38 for more information.
4. 2″ no-hub vent connection regularly furnished on right-hand side. Left hand available when specified (Suffix -VL).
5. Auxiliary inlet available right (-JR) or left (-JL) or both sides (-JJ) when specified.

Product Number	Approximate Weight lb [kg]
ZN1202-N4	90 [41]
ZN1202-ND4	158 [72]

PREFIXES	DESCRIPTION	SINGLE	DOUBLE
ZN1202*	D.C.C.I. System with 4″ Adjustable Coupling	Combine with Fitting Type for Pricing	
FITTING TYPE			
-N4	4″ No-Hub Stack, Single Inlet, 2″ Right-Hand Vent	2,117.00	–
-ND4	4″ No-Hub Stack, Back-to-Back Inlet (Double), 2″ Right-Hand Vent	–	3,907.00
SUFFIXES			**ADD**
–CC	Corrosion Resistant Cast Iron Coupling (2-1/4″ thru 12″)	N/C	N/C
⏲ –CS	2-1/4″ Polymer Coupling with Integral Test Cap	N/C	N/C
–G	Galvanized Cast Iron	817.00	1,633.00
–JJ	Two 2″ Auxiliary Inlets	1,447.00	1,447.00
–JL	2″ Left-Hand Auxiliary Inlet	728.00	728.00
–JR	2″ Right-Hand Auxiliary Inlet	728.00	728.00
–VL	Left-Hand Vent Connection	N/C	N/C
–VP	Vandal-Proof Trim	137.00	270.00
⏲ –50	Flush Valve Supply Support for Water Closet	90.00	176.00

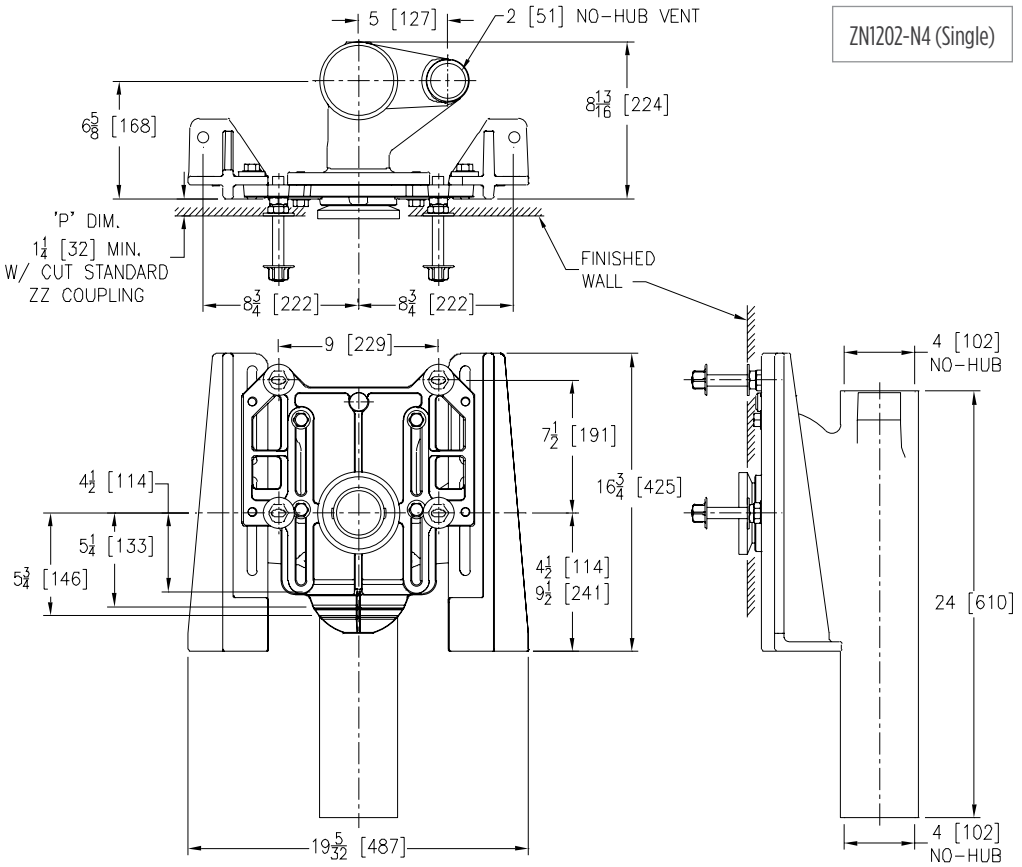

Items designated as Best Sellers are most specified and are generally in stock for shipment.

⏲ This symbol denotes a product that is engineered to reduce installation and rework time.

For Additional System Tools See "Z1200 Carrier Tools and Accessories" on page 210

**Regularly furnished unless otherwise specified.*

For additional product information, please visit www.zurn.com

Z1203-N ADJUSTABLE HORIZONTAL SIPHON JET – NO-HUB SERIES

ENGINEERING SPECIFICATION

Zurn Z1203-N( ) adjustable, horizontal siphon jet water closet provides a rigid system with ( ) size no-hub connections. Comes complete with Dura-Coated cast iron right-hand, left-hand, or double main fitting, 2" vent adjustable gasketed faceplate, universal floor mounted foot supports, corrosion resistant adjustable polymer icoupling with integral test cap, fixture bolts, trim, and stud protectors. Includes rear anchor tie down and bonded Neo-Seal gasket.

NOTES

1. Minimum "P" dimension attainable = 2".
2. Feet anchored to floor using minimum 1/2" diameter bolts through rear slots on carrier feet.
3. Rear anchor foot required for secure installation.
4. When used with Z1204 vertical fitting, and the centerline of the fitting to the finished wall exceeds 11-3/4", a 7" or longer, coupling is needed.

Z1203-NR (Single)

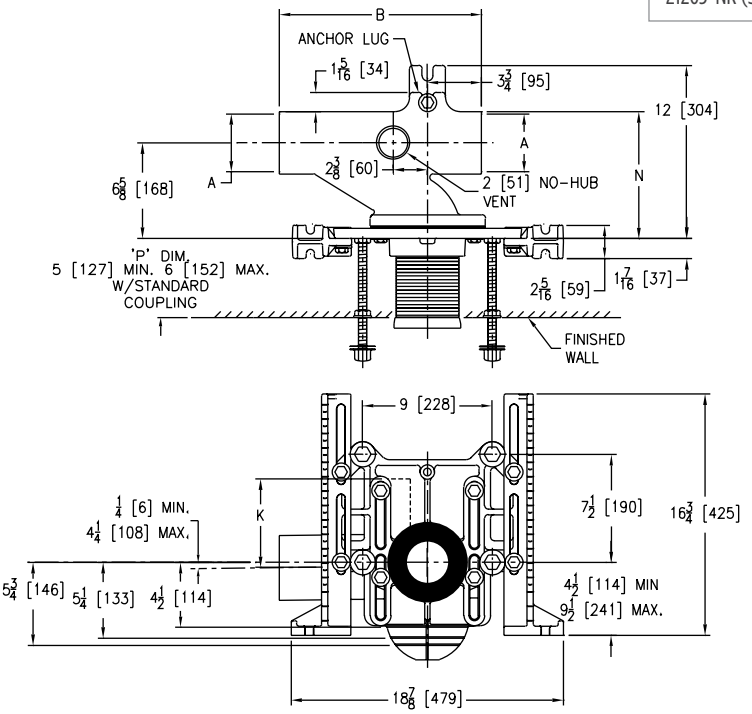

Z1203-ND (Double)

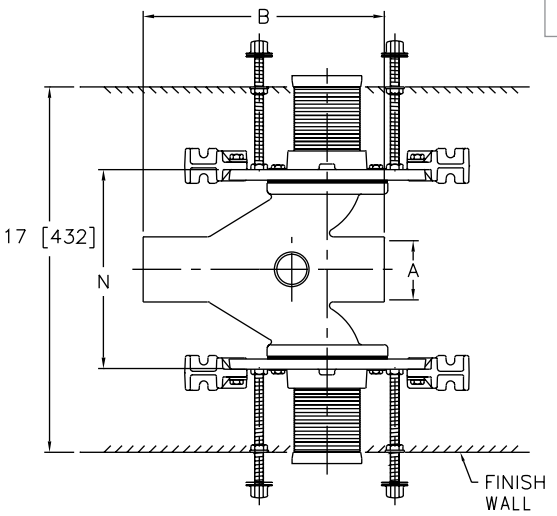

*Regularly furnished unless otherwise specified.

Items designated as Best Sellers are most specified and are generally in stock for shipment.

For additional product information, please visit www.zurn.com

This symbol denotes a product that is engineered to reduce installation and rework time.

For Additional System Tools See "Z1200 Carrier Tools and Accessories" on page 210

Z1203-N ADJUSTABLE HORIZONTAL SIPHON JET – NO-HUB SERIES

Product Number	Dimensions in inches [mm]				Approximate Weight lb [kg]
	A	B	K	N	
Z1203-NL3	3 [76]	14 [356]	6-1/8 [156]	7-7/16 [189]	64 [29]
Z1203-NR3					
Z1203-ND3				11-1/4 [286]	114 [52]
Z1203-NL4	4 [102]			8-7/8 [225]	67 [30]
Z1203-NR4					
Z1203-ND4				13-3/8 [340]	120 [54]

PREFIXES	DESCRIPTION	SINGLE	DOUBLE
Z1203*	D.C.C.I. System with 4″ Adjustable Coupling	Combine with Fitting Type for Pricing	
ZQ1203	D.C.C.I. System with NPT Faceplate Non-Adjustable Coupling		
FITTING TYPE			
-NR3	3″ No-Hub Right-Hand Inlet with Flow to Left	1,448.00	–
-NL3	3″ No-Hub Left-Hand Inlet with Flow to Right	1,448.00	–
-ND3	3″ No-Hub Back-to-Back Inlet (Double)	–	2,671.00
-NR4	4″ No-Hub Right-Hand Inlet with Flow to Left	1,584.00	–
-NL4	4″ No-Hub Left-Hand Inlet with Flow to Right	1,584.00	–
-ND4	4″ No-Hub Back-to-Back Inlet (Double)	–	2,965.00
SUFFIXES			**ADD**
–A	Auxiliary Support Assembly (Required For P-Dim. Greater than 18″)	861.00	1,720.00
–B	Blowout Type Fixture Support	N/C	N/C
–CC	Corrosion Resistant Cast Iron Coupling (6″ to 12″)	N/C	N/C
–CL	Coupling Length Greater than 12″ Per Inch (Specify Length Required)	102.00	203.00
–JC	2″ Auxiliary Inlet with Sanitary Sweep on Faceplate Centerline	365.00	–
–M	Auxiliary Foot Support (Required For P-Dim. 10″ - 18″)	324.00	645.00
◷ –PF	Pre-Fab Foot	N/C	N/C
◷ –PS	Pre-Fab Slotted Foot	N/C	N/C
◷ –RYK	Unistrut Pre-Fab Foot	N/C	N/C
–VP	Vandal-Proof Trim	137.00	270.00
–X3	3″ Foot Extension Assembly	90.00	176.00
–X4	4″ Foot Extension Assembly	115.00	227.00
◷ –45	Finishing Frame for Siphon Jet System (For Blowout System specify -45-B)	84.00	167.00
◷ –50	Flush Valve Supply Support for Water Closet (Previously Z1210-50)	90.00	176.00
			DEDUCT
–F	Floor Mounted, Back Outlet Fixture Support	-158.00	-315.00

BEST SELLERS	LIST PRICE
Z1203-ND4	2,965.00
Z1203-ND4-45	3,132.00
Z1203-ND4-45-50	3,308.00
Z1203-ND4-CL=12	2,965.00
Z1203-ND4-PF	2,965.00
Z1203-NL4-45	1,668.00
Z1203-NL4-CL=12	1,584.00
Z1203-NL4-PF	1,584.00
Z1203-NR3	1,448.00
Z1203-NR4	1,584.00
Z1203-NR4-CL=12	1,584.00

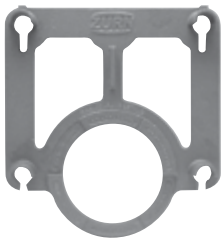

◷ Z1200-RI-GAUGE

Z1200-CPLGWRNCH-4

Items designated as Best Sellers are most specified and are generally in stock for shipment.

◷ This symbol denotes a product that is engineered to reduce installation and rework time.

For Additional System Tools See "Z1200 Carrier Tools and Accessories" on page 210

**Regularly furnished unless otherwise specified.*

For additional product information, please visit www.zurn.com

Z1203-H ADJUSTABLE HORIZONTAL SIPHON JET – HUB AND SPIGOT SERIES

ENGINEERING SPECIFICATION

Zurn Z1203-H( ) adjustable, horizontal siphon jet water closet provides a rigid system with ( ) size hub and spigot connections. Comes complete with Dura-Coated cast iron right-hand, left-hand, or double main fitting, 2" vent adjustable gasketed faceplate, universal floor mounted foot supports, corrosion resistant adjustable polymer coupling with integral test cap, fixture bolts, trim, and stud protectors. Includes rear anchor tie down and bonded Neo-Seal gasket.

NOTES

1. Minimum "P" dimension attainable = 2".
2. Feet anchored to floor using minimum 1/2" diameter bolts through rear slots on carrier feet.
3. Rear anchor foot required for secure installation (not on HD series).

Z1203-HR (Single)

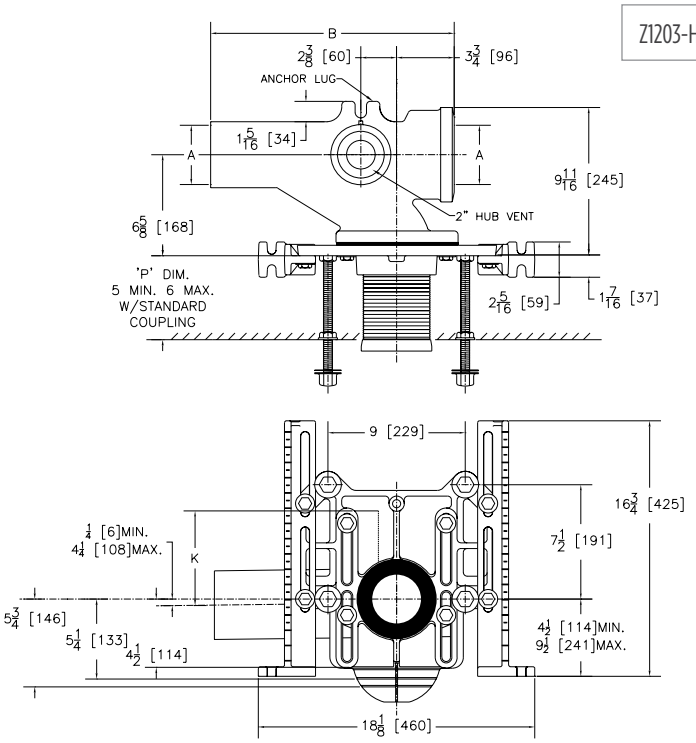

Z1203-HD (Double)

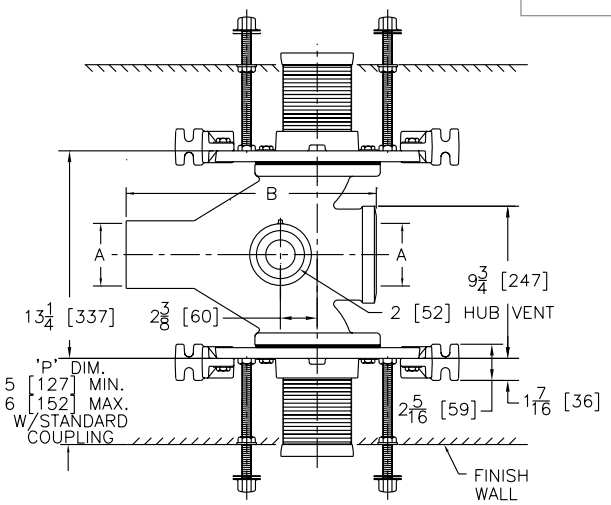

*Regularly furnished unless otherwise specified.

Items designated as Best Sellers are most specified and are generally in stock for shipment.

For additional product information, please visit www.zurn.com

This symbol denotes a product that is engineered to reduce installation and rework time.

For Additional System Tools See "Z1200 Carrier Tools and Accessories" on page 210

Z1203-H ADJUSTABLE HORIZONTAL SIPHON JET – HUB AND SPIGOT SERIES

Product Number	Dimensions in inches [mm]				Approximate Weight lb [kg]
	A	B	K	N	
Z1203-HL4	4 [102]	16 [406]	6-1/8 [156]	9-3/4 [248]	75 [34]
Z1203-HR4					
Z1203-HD4				13-1/4 [337]	125 [57]

PREFIXES	DESCRIPTION	SINGLE	DOUBLE
Z1203*	D.C.C.I. System with 4″ Adjustable Coupling	Combine with Fitting Type for Pricing	
ZQ1203	D.C.C.I. System with NPT Faceplate Non-Adjustable Coupling		
FITTING TYPE			
-HL4	4″ Hub & Spigot, Left-Hand Inlet with Flow to Right	1,630.00	–
-HR4	4″ Hub & Spigot, Right-Hand Inlet with Flow to Left	1,630.00	–
-HD4	4″ Hub & Spigot, Back-to-Back Inlet (Double)	–	3,044.00
SUFFIXES			**ADD**
–A	Auxiliary Support Assembly (Required For P-Dim. Greater than 18″)	861.00	1,720.00
–B	Blowout Type Fixture Support	N/C	N/C
–CC	Corrosion Resistant Cast Iron Coupling (6″ to 12″)	N/C	N/C
–CL	Coupling Length Greater than 12″ Per Inch (Specify Length Required)	102.00	203.00
–G	Galvanized Cast Iron	817.00	1,633.00
–M	Auxiliary Foot Support (Required For P-Dim. 10″ thru 18″)	324.00	645.00
◷ –PF	Pre-Fab Foot	N/C	N/C
◷ –PS	Pre-Fab Slotted Foot	N/C	N/C
◷ –RYK	Unistrut Pre-Fab Foot	N/C	N/C
–VP	Vandal-Proof Trim	137.00	270.00
–X3	3″ Foot Extension Assembly	90.00	176.00
–X4	4″ Foot Extension Assembly	115.00	227.00
◷ –45	Finishing Frame for Siphon Jet System (For Blowout System specify -45-B)	84.00	167.00
◷ –50	Flush Valve Supply Support for Water Closet (Previously Z1210-50)	90.00	176.00
			DEDUCT
–F	Floor Mounted, Back Outlet Fixture Support	-158.00	-315.00

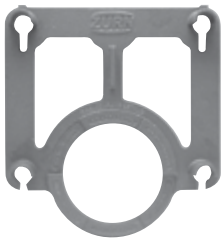

◷ Z1200-RI-GAUGE

Z1200-CPLGWRNCH-4

Items designated as Best Sellers are most specified and are generally in stock for shipment.

◷ This symbol denotes a product that is engineered to reduce installation and rework time.

For Additional System Tools See "Z1200 Carrier Tools and Accessories" on page 210

**Regularly furnished unless otherwise specified.*

For additional product information, please visit www.zurn.com

ZE1203-N ADJUSTABLE HORIZONTAL SIPHON JET WITH ELONGATED FITTING – NO-HUB SERIES

ENGINEERING SPECIFICATION

Zurn ZE1203-N( ) adjustable, horizontal siphon jet water closet provides a rigid system with ( ) no-hub connections. Comes complete with Dura-Coated cast iron right-hand, left-hand, or double main elongated fitting, 2" vent, adjustable gasketed faceplate, universal floor mounted foot supports, corrosion resistant adjustable polymer coupling with integral test cap, fixture bolts, trim, and stud protectors. Includes rear anchor tie down and bonded Neo-Seal gasket.

NOTES

1. 13-1/2" minimum space required between front of foot and rear of anchor to install ZE1203 Series.
2. Minimum 'P' dimension obtainable = 2".
3. Feet bolted to floor using min. 1/2" diameter bolts through back slots on carrier feet.
4. Rear anchor foot mandatory for secure installation.

ZE1203-NR4 (Single)

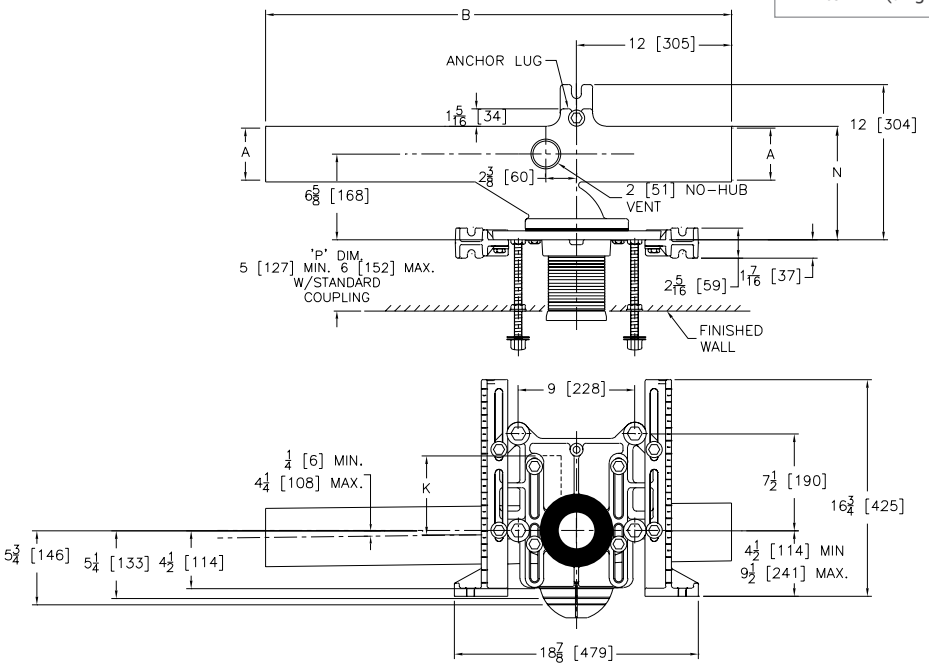

ZE1203-ND4 (Double)

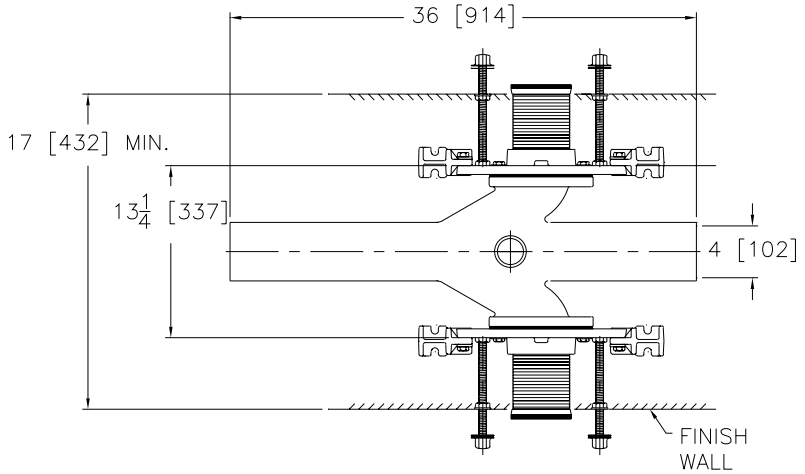

**Regularly furnished unless otherwise specified.*

For additional product information, please visit www.zurn.com

Items designated as Best Sellers are most specified and are generally in stock for shipment.

This symbol denotes a product that is engineered to reduce installation and rework time.

For Additional System Tools See "Z1200 Carrier Tools and Accessories" on page 210

⏲ ZE1203-N ADJUSTABLE HORIZONTAL SIPHON JET WITH ELONGATED FITTING – NO-HUB SERIES

Product Number	Dimensions in inches [mm]				Approximate Weight lb [kg]
	A	B	K	N	
ZE1203-NL4	4 [102]	36 [914]	6-1/8 [156]	8-7/8 [225]	84 [38]
ZE1203-NR4					
ZE1203-ND4				13-3/8 [340]	136 [62]

PREFIXES	DESCRIPTION	SINGLE	DOUBLE
ZE1203*	D.C.C.I. Elongated Fitting System with 4″ Adjustable Coupling	Combine with Fitting Type for Pricing	
ZEQ1203	D.C.C.I. Elongated Fitting System with NPT Faceplate, Non-Adjustable Coupling		
FITTING TYPE			
-NR4	4″ No-Hub Right-Hand Inlet with Flow to Left	1,965.00	–
-NL4	4″ No-Hub Left-Hand Inlet with Flow to Right	1,965.00	–
-ND4	4″ No-Hub Back-to-Back Inlet (Double)	–	3,242.00
SUFFIXES			**ADD**
–A	Auxiliary Support Assembly (Required For P-Dim. Greater than 18″)	861.00	1,720.00
–B	Blowout Type Fixture Support	N/C	N/C
–CC	Corrosion Resistant Cast Iron Coupling (6″ to 12″)	N/C	N/C
–CL	Coupling Length Greater than 12″ - Per Inch (Specify Length Required)	102.00	203.00
–JC	2″ Auxiliary Inlet with Sanitary Sweep	365.00	–
–M	Auxiliary Foot Support (Required For P-Dim. 10″ thru 18″)	324.00	645.00
⏲ –PF	Pre-Fab Foot	N/C	N/C
⏲ –PS	Pre-Fab Slotted Foot	N/C	N/C
⏲ –RYK	Unistrut Pre-Fab Foot	N/C	N/C
–VP	Vandal-Proof Trim	137.00	270.00
–X3	3″ Foot Extension Assembly	90.00	176.00
–X4	4″ Foot Extension Assembly	115.00	227.00
⏲ –45	Finishing Frame for Siphon Jet System (For Blowout System specify -45-B)	84.00	167.00
⏲ –50	Flush Valve Supply Support for Water Closet (Previously Z1210-50)	90.00	176.00
			DEDUCT
–F	Floor Mounted, Back Outlet Fixture Support	-158.00	-315.00

BEST SELLERS	LIST PRICE
ZEQ1203-ND4-45	3,407.00
ZEQ1203-NR4-45-50	2,138.00

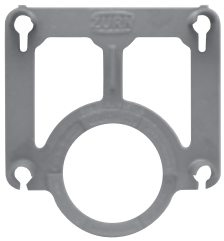

⏲ Z1200-RI-GAUGE

Z1200-CPLGWRNCH-4

Items designated as Best Sellers are most specified and are generally in stock for shipment.

⏲ This symbol denotes a product that is engineered to reduce installation and rework time.

For Additional System Tools See "Z1200 Carrier Tools and Accessories" on page 210

**Regularly furnished unless otherwise specified.*

For additional product information, please visit www.zurn.com

ZE1203-H ADJUSTABLE HORIZONTAL SIPHON JET WITH ELONGATED FITTING – HUB AND SPIGOT SERIES

ENGINEERING SPECIFICATION

Zurn ZE1203-H( ) adjustable, horizontal siphon jet water closet provides a rigid system with ( ) size hub and spigot connections. Comes complete with Dura-Coated cast iron right-hand, left-hand, or double main elongated fitting, 2" vent, adjustable gasketed faceplate, universal floor mounted foot supports, corrosion resistant adjustable polymer coupling with integral test cap, fixture bolts, trim, and stud protectors. Includes rear anchor tie down and bonded Neo-Seal gasket.

NOTES

1. 13-1/2" minimum space required between front of foot and rear of anchor to install ZE1203 Series.
2. Minimum "P" dimension attainable = 2"
3. Feet anchored to floor using minimum 1/2" diameter anchors through rear slots on carrier feet.
4. Rear anchor foot required for secure installation. (Not on HD series)

ZE1203-HR4 (Single)

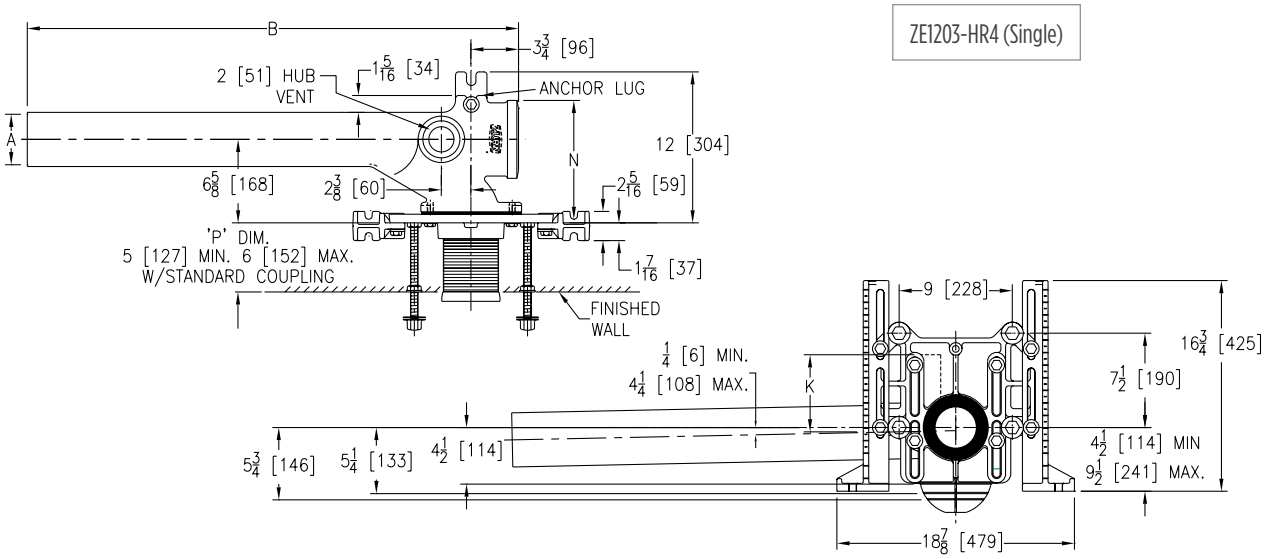

ZE1203-HD4 (Double)

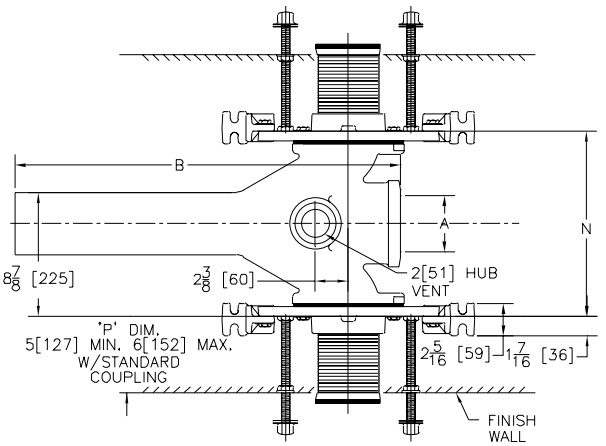

*Regularly furnished unless otherwise specified.

Items designated as Best Sellers are most specified and are generally in stock for shipment.

For additional product information, please visit www.zurn.com

This symbol denotes a product that is engineered to reduce installation and rework time.

For Additional System Tools See "Z1200 Carrier Tools and Accessories" on page 210

⏲ ZE1203-H ADJUSTABLE HORIZONTAL SIPHON JET WITH ELONGATED FITTING – HUB AND SPIGOT SERIES

Product Number	Dimensions in inches [mm]				Approximate Weight lb [kg]
	A	B	K	N	
ZE1203-HL4	4 [102]	36 [914]	6-1/8 [156]	9-13/16 [249]	125 [57]
ZE1203-HR4					
ZE1203-HD4				13-1/4 [337]	144 [65]

PREFIXES	DESCRIPTION	SINGLE	DOUBLE
ZE1203*	D.C.C.I. Elongated Fitting System with 4″ Adjustable Coupling	Combine with Fitting Type for Pricing	
ZEQ1203	D.C.C.I. Elongated Fitting System with NPT Faceplate, Non-Adjustable Coupling		
FITTING TYPE			
-HL4	4″ Caulk, Left-Hand Inlet with Flow Right	2,195.00	–
-HR4	4″ Caulk, Right-Hand Inlet with Flow Left	2,195.00	–
-HD4	4″ Caulk, Back-to-Back Inlet (Double)	–	3,819.00
SUFFIXES			**ADD**
–A	Auxiliary Support Assembly (Required For P-Dim. Greater than 18″)	861.00	1,720.00
–B	Blowout Type Fixture Support	N/C	N/C
–CC	Corrosion Resistant Cast Iron Coupling (6″ to 12″)	N/C	N/C
–CL	Custom length greater than 12″ - Per Inch (Specify Length)	102.00	203.00
–JC	2″ Auxiliary Inlet with Sanitary Sweep	365.00	–
–M	Auxiliary Foot Support (Required For P-Dim. 10″ thru 18″)	324.00	645.00
⏲ –PF	Pre-Fab Foot	N/C	N/C
⏲ –PS	Pre-Fab Slotted Foot	N/C	N/C
⏲ –RYK	Unistrut Pre-Fab Foot	N/C	N/C
–VP	Vandal-Proof Trim	137.00	270.00
–X3	3″ Foot Extension Assembly	90.00	176.00
–X4	4″ Foot Extension Assembly	115.00	227.00
⏲ –45	Finishing Frame for Siphon Jet System (For Blowout System specify -45-B)	84.00	167.00
⏲ –50	Flush Valve Supply Support for Water Closet (Previously Z1210-50)	90.00	176.00
			DEDUCT
–F	Floor Mounted, Back Outlet Fixture Support	-158.00	-315.00

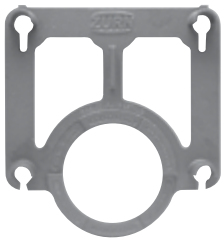

⏲ Z1200-RI-GAUGE

Z1200-CPLGWRNCH-4

Items designated as Best Sellers are most specified and are generally in stock for shipment.

⏲ This symbol denotes a product that is engineered to reduce installation and rework time.

For Additional System Tools See "Z1200 Carrier Tools and Accessories" on page 210

**Regularly furnished unless otherwise specified.*

For additional product information, please visit www.zurn.com

Z1204-H ADJUSTABLE VERTICAL SIPHON JET – HUB AND SPIGOT SERIES

ENGINEERING SPECIFICATION

Zurn Z1204-( ) adjustable, vertical siphon jet water closet provides a rigid system with ( ) size hub and spigot connections and ( ) side inlets. Comes complete with Dura-Coated cast iron right hand or left hand main fitting, 2" vent, adjustable gasketed faceplate, universal floor mounted foot supports, corrosion resistant adjustable polymer coupling with integral test cap, fixture bolts, trim, and stud protectors. Includes rear anchor tie down and bonded Neo-Seal gasket.

NOTES

1. 13-1/4" minimum space required between front of foot and rear of anchor to install Z1204-H4.
2. Minimum "P" dimension attainable = 2" [51 mm].
3. Feet anchored to floor using minimum 1/2" [13] diameter anchors through rear slots on carrier feet.
4. Rear anchor foot required for secure installation.

Product Number	Dimensions in inches [mm]								Approximate Weight lb [kg]
	A	B	D	E	H	J	K	N	
Z1204-H4	4 [102]	-	5 [127]	6-5/8 [168]	-	24 [610]	15-1/2 [394]	9-3/4 [248]	90 [41]
Z1204-HD4	4 [102]		5 [127]	6-5/8 [168]				13-1/4 [337]	134 [61]
Z1204-1HL4	4 [102]	4 [102]	5 [127]	6-5/8 [168]	7-1/2 [191]			9-3/4 [248]	107 [49]
Z1204-1HR4									
Z1204-1HD4	4 [102]	4 [102]	5-1/4 [133]	6-5/8 [168]	7-1/2 [191]			13-1/4 [337]	169 [77]
Z1204-2H4	4 [102]	4 [102]	5 [127]	6-5/8 [168]	7-1/2 [191]			9-3/4 [248]	122 [55]
Z1204-2HD4	4 [102]	4 [102]	5 [127]	6-5/8 [168]	7-1/2 [191]			13-1/4 [337]	172 [78]

Z1204-H (Single)

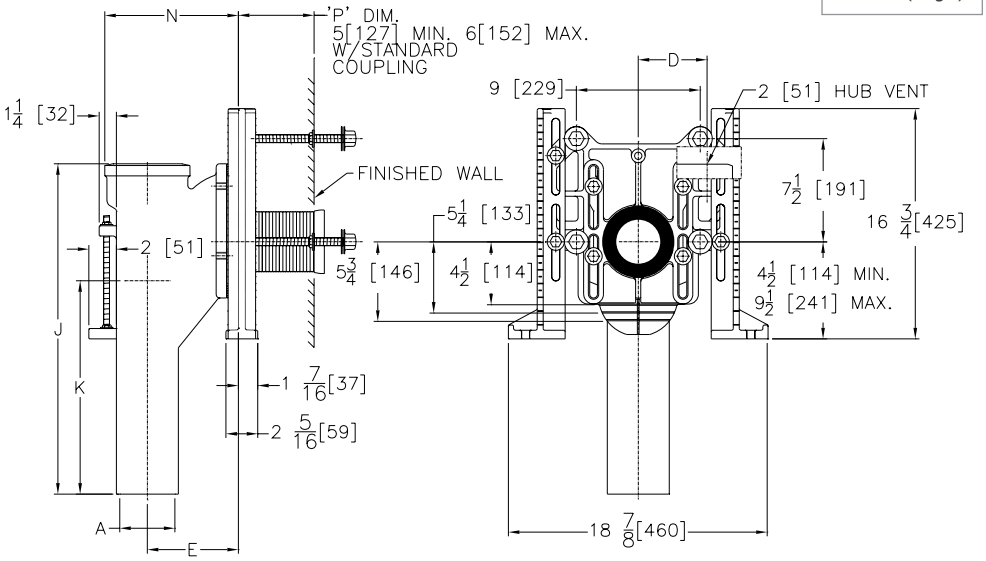

-1HL4-JR-VL Options Shown

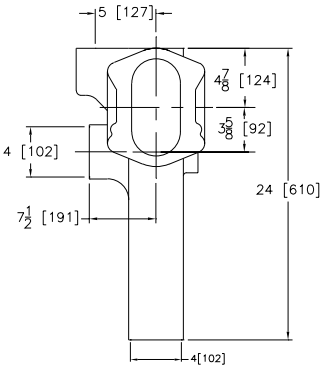

*Regularly furnished unless otherwise specified.

For additional product information, please visit www.zurn.com

Items designated as Best Sellers are most specified and are generally in stock for shipment.

This symbol denotes a product that is engineered to reduce installation and rework time.

For Additional System Tools See "Z1200 Carrier Tools and Accessories" on page 210

Z1204-H ADJUSTABLE VERTICAL SIPHON JET – HUB AND SPIGOT SERIES

PREFIXES	DESCRIPTION	SINGLE	DOUBLE
Z1204*	D.C.C.I. System with 4″ Adjustable Coupling	Combine with Fitting Type for Pricing	
ZQ1204	D.C.C.I. System with NPT Faceplate Non-Adjustable Coupling		
FITTING TYPE			
-H4	4″ Hub/Spigot Stack, Single Inlet, 2″ Right-Hand Vent	1,930.00	–
-HD4	4″ Hub/Spigot Stack, Double Inlet, 2″ Vent	–	3,337.00
-1HL4	4″ Hub/Spigot Stack, Single Inlet, (1) 4″ Left-Hand Side Inlet, 2″ Left-Hand Vent	2,241.00	–
-1HR4	4″ Hub/Spigot Stack, Single Inlet, (1) 4″ Right-Hand Side Inlet, 2″ Right-Hand Vent	2,241.00	–
-1HD4	4″ Hub/Spigot Stack, Double Inlet, (1) 4″ Side Inlet, 2″ Vent	–	3,648.00
-2H4	4″ Hub/Spigot Stack, Single Inlet, (2) 4″ Side Inlets, 2″ Right-Hand Vent	2,555.00	–
-2HD4	4″ Hub/Spigot Stack, Double Inlet, (2) 4″ Side Inlet, 2″ Vent	–	3,963.00

SUFFIXES			ADD
	DESCRIPTION	SINGLE	DOUBLE
–A	Auxiliary Support Assembly (Required For P-Dim. Greater than 18″)	861.00	1,720.00
–B	Blowout Type Fixture Support	N/C	N/C
–CC	Corrosion Resistant Cast Iron Coupling (6″ to 12″)	N/C	N/C
–CL	Custom length greater than 12″- Per Inch (Specify Length)	102.00	203.00
–JJ	Two 2″ Auxiliary Inlets	724.00	724.00
–JL	2″ Left-Hand Auxiliary Inlet	365.00	365.00
–JR	2″ Right-Hand Auxiliary Inlet	365.00	365.00
–M	Auxiliary Foot Support (Required For P-Dim. 10″ thru 18″)	324.00	645.00
◷ –PF	Pre-Fab Foot	N/C	N/C
◷ –PS	Pre-Fab Slotted Foot	N/C	N/C
◷ –RYK	Unistrut Pre-Fab Foot	N/C	N/C
–VP	Vandal-Proof Trim	137.00	270.00
–X3	3″ Foot Extension Assembly	90.00	176.00
–X4	4″ Foot Extension Assembly	115.00	227.00
◷ –45	Finishing Frame for Siphon Jet System (For Blowout System specify -45-B)	84.00	167.00
◷ –50	Flush Valve Supply Support for Water Closet (Previously Z1210-50)	90.00	176.00
			DEDUCT
–F	Floor Mounted, Back Outlet Fixture Support	-158.00	-315.00

Z1204-HD (Double)

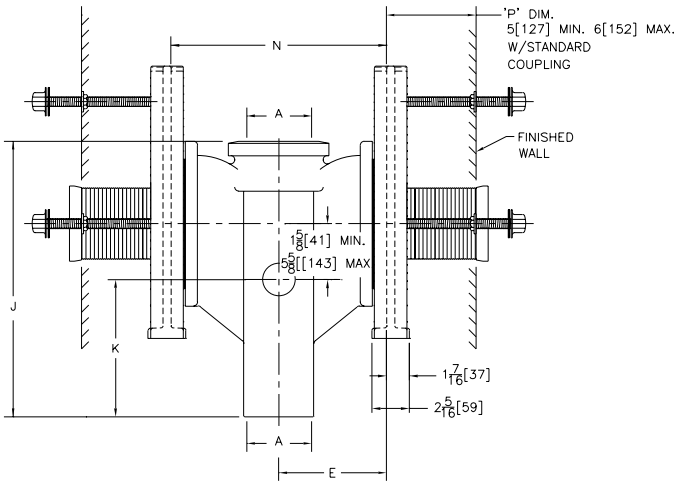

Items designated as Best Sellers are most specified and are generally in stock for shipment.

◷ *This symbol denotes a product that is engineered to reduce installation and rework time.*

For Additional System Tools See "Z1200 Carrier Tools and Accessories" on page 210

**Regularly furnished unless otherwise specified.*

For additional product information, please visit www.zurn.com

Z1204-N ADJUSTABLE VERTICAL SIPHON JET – NO-HUB SERIES

ENGINEERING SPECIFICATION

Zurn Z1204-( ) adjustable, vertical siphon jet water closet provides rigid system with ( ) size no-hub connections and ( ) side inlets. Comes complete with Dura-Coated cast iron, right-hand, left-hand, or double main fitting, 2" vent, adjustable, gasketed faceplate, universal floor mounted foot supports, corrosion resistant, adjustable polymer coupling with integral test cap, fixture bolts, trim and stud protectors. Includes rear anchor tie down and bonded Neo-Seal gasket.

NOTES

1. Minimum "P" dimension obtainable = 2".
2. 2" no-hub vent connection regularly furnished on right-hand side. Left hand available when specified (Suffix-VL)
3. Auxiliary inlet available right (-JR) or left (-JL) or both sides (-JJ) when specified.
4. Feet bolted to floor using min. 1/2" diameter bolts and back slots on carrier feet.
5. Back anchor foot required for secure installation. (For single carrier only)

Product Number	Dimensions in inches [mm]						Approximate Weight lb [kg]	Notes
	A	B	D	E	H	N		
Z1204-N4	4 [102]	-	5 [127]	6-5/8 [168]	5-1/2 [140]	8-7/8 [225]	80 [36]	2" no-hub vent connection regularly furnished on right-hand side. Left hand available when specified (-VL). 2" auxiliary inlet available right (-JR) or left (-JL), or both side(-JJ) when specified
Z1204-ND4	4 [102]		5 [127]	6-5/8 [168]	5-1/2 [140]	13-1/4 [337]	134 [61]	
Z1204-1NL4	4 [102]	4 [102]	5 [127]	6-5/8 [168]	5-1/2 [140]	8-7/8 [225]	85 [39]	2" no-hub vent located on same side as 3", 4" side inlet 2" no-hub auxiliary inlet located opposite 3", 4" side inlet when specified. (-JL or -JR)
Z1204-1NR4								
Z1204-1NL43		3 [76]						
Z1204-1NR43								
Z1204-1ND4	4 [102]	4 [102]	5 [127]	6-5/8 [168]	5-1/2 [140]	13-1/4 [337]	137 [62]	One 4" side inlet as indicated 2" no-hub auxiliary inlet located opposite 4" side inlet when specified
Z1204-1ND43		3 [76]						
Z1204-2N4	4 [102]	4 [102]	5 [127]	6-5/8 [168]	5-1/2 [140]	8-7/8 [225]	88 40]	2" no-hub vent connection regularly furnished on right side. Left-hand avaliable when specified (-VL)
Z1204-2N43		3 [76]						
Z1204-2ND4	4 [102]	4 [102]	5 [127]	6-5/8 [168]	5-1/2"	13-1/4 [337]	139 [63]	Two 3", 4" side inlets as indicated
Z1204-2ND43		3 [76]						

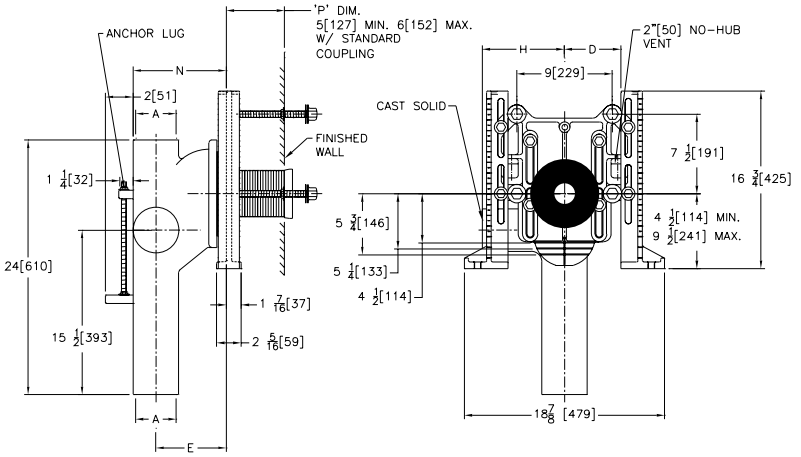

Z1204-N (Single)

*Regularly furnished unless otherwise specified.

For additional product information, please visit www.zurn.com

Items designated as Best Sellers are most specified and are generally in stock for shipment.

This symbol denotes a product that is engineered to reduce installation and rework time.

For Additional System Tools See "Z1200 Carrier Tools and Accessories" on page 210

Z1204-N ADJUSTABLE VERTICAL SIPHON JET – NO-HUB SERIES

PREFIXES	DESCRIPTION	SINGLE	DOUBLE
Z1204*	D.C.C.I. System with 4″ Adjustable Coupling	Combine with Fitting Type for Pricing	
ZQ1204	D.C.C.I. System with NPT Faceplate Non-Adjustable Coupling		
FITTING TYPE			
-N4	4″ No-Hub Stack, Single Inlet, 2″ Right-Hand Vent	1,795.00	–
-ND4	4″ No-Hub Stack, Double Inlet, 2″ Vent	–	3,175.00
-1NL4	4″ No-Hub Stack, Single Inlet, (1) 4″ Left-Hand Side Inlet, 2″ Left-Hand Vent	2,105.00	–
-1NR4	4″ No-Hub Stack, Single Inlet, (1) 4″ Right-Hand Side Inlet, 2″ Right-Hand Vent	2,105.00	–
-1NL43	4″ No-Hub Stack, Single Inlet, (1) 3″ Left-Hand Side Inlet, 2″ Left-Hand Vent	2,105.00	–
-1NR43	4″ No-Hub Stack, Single Inlet, (1) 3″ Right-Hand Side Inlet, 2″ Right-Hand Vent	2,105.00	–
-1ND4	4″ No-Hub Stack, Double Inlet, (1) 4″ Side Inlet, 2″ Vent	–	3,472.00
-1ND43	4″ No-Hub Stack, Double Inlet, (1) 3″ Side Inlet, 2″ Vent	–	3,472.00
-2N4	4″ No-Hub Stack, Single Inlet, (2) 4″ Side Inlets, 2″ Right-Hand Vent	2,409.00	–
-2N43	4″ No-Hub Stack, Single Inlet, (2) 3″ Side Inlets, 2″ Right-Hand Vent	2,409.00	–
-2ND4	4″ No-Hub Stack, Double Inlets, (2) 4″ Side Inlets, 2″ Vent	–	3,780.00
-2ND43	4″ No-Hub Stack, Double Inlets, (2) 3″ Side Inlets, 2″ Vent	–	3,780.00

SUFFIXES	DESCRIPTION	SINGLE	ADD DOUBLE
–A	Auxiliary Support Assembly (Required For P-Dim. Greater than 18″)	861.00	1,720.00
–B	Blowout Type Fixture Support	N/C	N/C
–CC	Corrosion Resistant Cast Iron Coupling (6″ to 12″)	N/C	N/C
–CL	Custom length greater than 12″- Per Inch (Specify Length)	102.00	203.00
–JJ	Two 2″ Auxiliary Inlets	724.00	724.00
–JL	2″ Left-Hand Auxiliary Inlet	365.00	365.00
–JR	2″ Right-Hand Auxiliary Inlet	365.00	365.00
–M	Auxiliary Foot Support (Required For P-Dim. 10″ thru 18″)	324.00	645.00
–VP	Vandal-Proof Trim	137.00	270.00
–X3	3″ Foot Extension Assembly	90.00	176.00
–X4	4″ Foot Extension Assembly	115.00	227.00
–45	Finishing Frame for Siphon Jet System (For Blowout System specify -45-B)	84.00	167.00
–50	Flush Valve Supply Support for Water Closet (Previously Z1210-50)	90.00	176.00
			DEDUCT
–F	Floor Mounted, Back Outlet Fixture Support	-158.00	-315.00

BEST SELLERS	LIST PRICE
Z1204-1-ND4	3,472.00
Z1204-1-NL4	2,105.00
Z1204-N4	1,795.00
Z1204-ND4	3,175.00

Z1204-ND (Double)

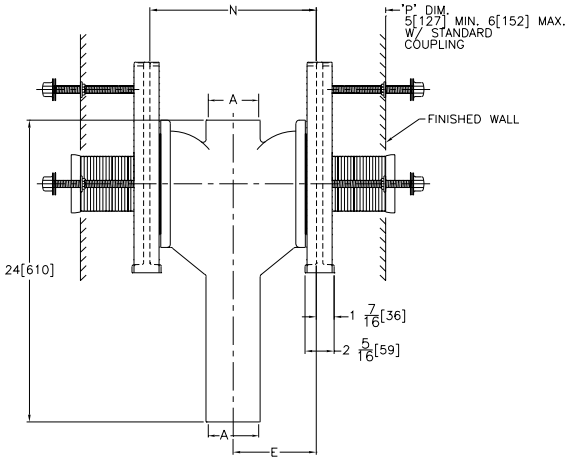

Items designated as Best Sellers are most specified and are generally in stock for shipment.

This symbol denotes a product that is engineered to reduce installation and rework time.

For Additional System Tools See "Z1200 Carrier Tools and Accessories" on page 210

**Regularly furnished unless otherwise specified.*

For additional product information, please visit www.zurn.com

Z1207-N ADJUSTABLE HORIZONTAL HIGH ROUGH-IN SIPHON JET – NO-HUB

ENGINEERING SPECIFICATION

Zurn Z1207-N( ) adjustable, horizontal, high rough-in siphon jet water closet provides a rigid system with 4" size no-hub connections. Comes complete with Dura-Coated cast iron right-hand, left-hand, or double main fitting, with 2" vent, adjustable gasketed faceplate, universal floor mounted foot supports, corrosion resistant adjustable ABS coupling with integral test cap, fixture bolts, trim, and stud protectors. Rear anchor tie down and bonded "Neo-Seal" gasket.

NOTES

1. 13-1/2" minimum space required between front of foot and rear of anchor to install Z1207-N4 Series.
2. Minimum "P" dimension obtainable = 2".
3. Feet anchored to floor using minimum 1/2" diameter anchors through rear slots on carrier feet.
4. Rear anchor foot required for secure installation.

Product Number	Approximate Weight lb [kg]
Z1207-NL4	87 [39]
Z1207-NR4	
Z1207-ND4	115 [52]

PREFIXES	DESCRIPTION	SINGLE	DOUBLE
Z1207*	D.C.C.I. System with 4" Adjustable Coupling	Combine with Fitting Type for Pricing	
ZQ1207	D.C.C.I. System with NPT Faceplate Non-Adjustable Coupling		
FITTING TYPE			
-NR4	4" No-Hub Right-Hand Inlet with Flow to Left	1,584.00	–
-NL4	4" No-Hub Left-Hand Inlet with Flow to Right	1,584.00	–
-ND4	4" No-Hub Back-to-Back Inlet (Double)	–	2,965.00
SUFFIXES			ADD
–A	Auxiliary Support Assembly (Required For P-Dim. Greater than 18")	861.00	1,720.00
–B	Blowout Type Fixture Support	N/C	N/C
–CC	Corrosion Resistant Cast Iron Coupling (6" to 12")	N/C	N/C
–CL	Custom length greater than 12"- Per Inch (Specify Length)	102.00	203.00
–M	Auxiliary Foot Support (Required For P-Dim. 10" thru 18")	324.00	645.00
–VP	Vandal-Proof Trim	137.00	270.00
–X3	3" Foot Extension Assembly	90.00	176.00
–X4	4" Foot Extension Assembly	115.00	227.00
–45	Finishing Frame for Siphon Jet System (For Blowout System specify -45-B)	84.00	167.00
–50	Flush Valve Supply Support for Water Closet (Previously Z1210-50)	90.00	176.00
			DEDUCT
–F	Floor Mounted, Back Outlet Fixture Support	-158.00	-315.00

Z1200-CPLGWRNCH-4

Z1207-NR4 (Single)

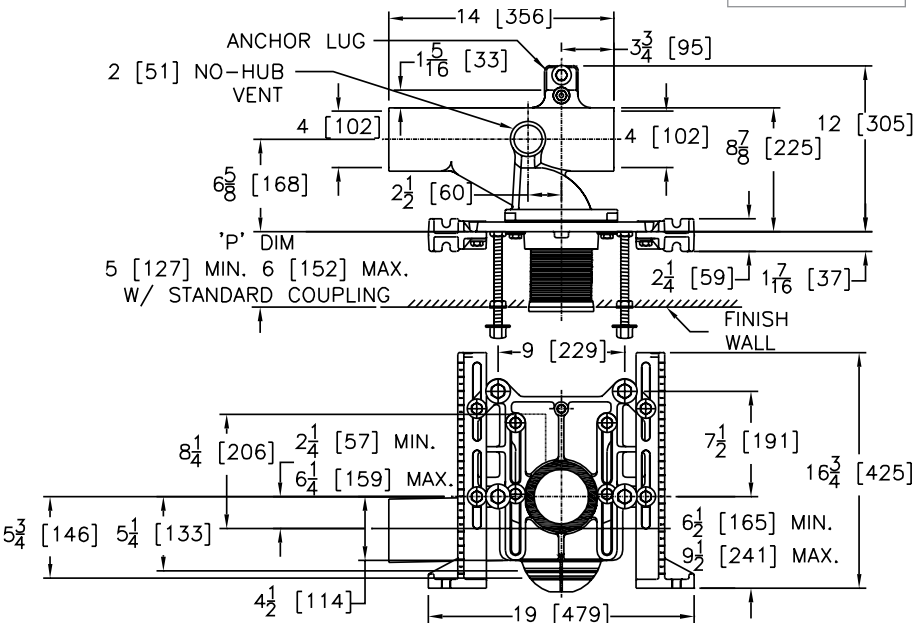

*Regularly furnished unless otherwise specified.

For additional product information, please visit www.zurn.com

Items designated as Best Sellers are most specified and are generally in stock for shipment.

This symbol denotes a product that is engineered to reduce installation and rework time.

For Additional System Tools See "Z1200 Carrier Tools and Accessories" on page 210

Z1208-N VERTICAL SIPHON JET WATER CLOSET SUPPORT SYSTEM – NO-HUB

ENGINEERING SPECIFICATION

Zurn Z1208-N( ) vertical siphon jet water closet provides a rigid system with ( ) size no-hub connections. Comes complete with Dura-Coated cast iron main fitting, separable faceplate rigidly mounted on fitting, universal floor mounted foot supports, corrosion resistant adjustable polymer coupling with integral test cap, fixture bolts, trim, and stud protectors. Includes rear anchor tie down, and bonded Neo-Seal gasket.

NOTES

1. Minimum "P" dimension obtainable = 2".
2. Feet anchored to floor using minimum 1/2" diameter anchors through rear slots on carrier feet.
3. Rear anchor foot required for secure installation.

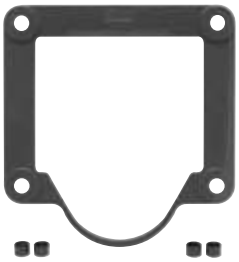

Z1200-FINFRAME-SJ

Product Number	Dimensions in inches [mm]					Approximate Weight lb [kg]
	A	B	C	H	N	
Z1208-N32	3 [76]	18 [457]	2 [51]	4-3/8 [111]	6-1/4 [159]	60 [27]
Z1208-N42	4 [102]	24 [610]		4-7/8 [124]	6-5/8 [168]	70 [32]
Z1208-N44			4 [102]	6-1/2 [165]		72 [33]

PREFIXES	DESCRIPTION	
Z1208*	D.C.C.I. System with 4" Adjustable Coupling	Combine with Fitting Type for Pricing
FITTING TYPE		
-N32	3" No-Hub, 2" No-Hub Vent	1,427.00
-N42	4" No-Hub, 2" No-Hub Vent	1,427.00
-N44	4" No-Hub, 4" No-Hub Vent	1,427.00
SUFFIXES		**ADD**
–A	Auxiliary Support Assembly (Required For P-Dim. Greater than 18")	861.00
–B	Blowout Type Fixture Support	N/C
–CC	Corrosion Resistant Cast Iron Coupling (6" to 12")	N/C
–CL	Custom length greater than 12"- Per Inch (Specify Length)	102.00
–JJ	Two 2" Auxiliary Inlets	724.00
–JL	2" Left-Hand Auxiliary Inlet	365.00
–JR	2" Right-Hand Auxiliary Inlet	365.00
–M	Auxiliary Foot Support (Required For P-Dim. 10" thru 18")	324.00
–VP	Vandal-Proof Trim	137.00
–X3	3" Foot Extension Assembly	90.00
–X4	4" Foot Extension Assembly	115.00
◷ –45	Finishing Frame for Siphon Jet System (For Blowout System specify -45-B)	84.00
◷ –50	Flush Valve Supply Support for Water Closet	90.00
		DEDUCT
–F	Floor Mounted, Back Outlet Fixture Support	-158.00
BEST SELLERS		**LIST PRICE**
Z1208-N32		1,427.00
Z1208-N42		1,427.00
Z1208-N44		1,427.00

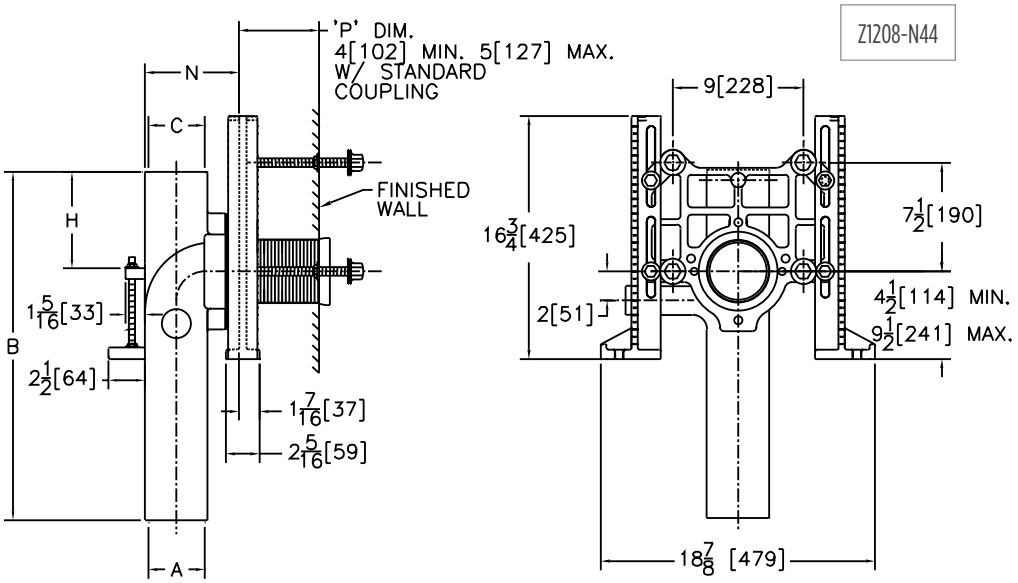

Items designated as Best Sellers are most specified and are generally in stock for shipment.

◷ This symbol denotes a product that is engineered to reduce installation and rework time.

For Additional System Tools See "Z1200 Carrier Tools and Accessories" on page 210

**Regularly furnished unless otherwise specified.*

For additional product information, please visit www.zurn.com

Z1208-H VERTICAL SIPHON JET WATER CLOSET SUPPORT SYSTEM – HUB AND SPIGOT

ENGINEERING SPECIFICATION

Zurn Z1208-H( ) vertical siphon jet water closet provides a rigid system with ( ) size hub and spigot connections. Comes complete with Dura-Coated cast iron main fitting, separable faceplate rigidly mounted on fitting, universal floor mounted foot supports, corrosion resistant adjustable polymer coupling with integral test cap, fixture bolts, trim, and stud protectors. Includes rear anchor tie down, and bonded Neo-Seal gasket.

NOTES

1. Minimum "P" dimension obtainable = 2".
2. Feet anchored to floor using minimum 1/2" diameter anchors through rear slots on carrier feet.
3. Rear anchor foot required for secure installation.

Product Number	Dimensions in inches [mm]					Approximate Weight lb [kg]
	A	B	C	H	N	
Z1208-H42	4 [102]	14-3/4 [375]	2 [51]	4-3/8 [111]	6-1/4 [159]	60 [27]
Z1208-H44		15-1/4 [387]	4 [102]	4-7/8 [124]	7-5/16 [186]	63 [29]

PREFIXES	DESCRIPTION	
Z1208*	D.C.C.I. System with 4" Adjustable Coupling	Combine with Fitting Type for Pricing
FITTING TYPE		
-H42	4" Spigot, 2" Hub Vent	1,465.00
-H44	4" Spigot, 4" Hub Vent	1,465.00
SUFFIXES		**ADD**
–A	Auxiliary Support Assembly (Required For P-Dim. Greater than 18")	861.00
–B	Blowout Type Fixture Support	N/C
–CC	Corrosion Resistant Cast Iron Coupling (6" to 12")	N/C
–CL	Custom length greater than 12"- Per Inch (Specify Length)	102.00
–JJ	Two 2" Auxiliary Inlets	724.00
–JL	2" Left-Hand Auxiliary Inlet	365.00
–JR	2" Right-Hand Auxiliary Inlet	365.00
–M	Auxiliary Foot Support (Required For P-Dim. 10" - 18")	324.00
–VP	Vandal-Proof Trim	137.00
–X3	3" Foot Extension Assembly	90.00
–X4	4" Foot Extension Assembly (Previously Z1210-29)	115.00
◷ –45	Finishing Frame for Siphon Jet System (For Blowout System specify -45-B)	84.00
◷ –50	Flush Valve Supply Support for Water Closet	90.00
		DEDUCT
–F	Floor Mounted, Back Outlet Fixture Support	-158.00

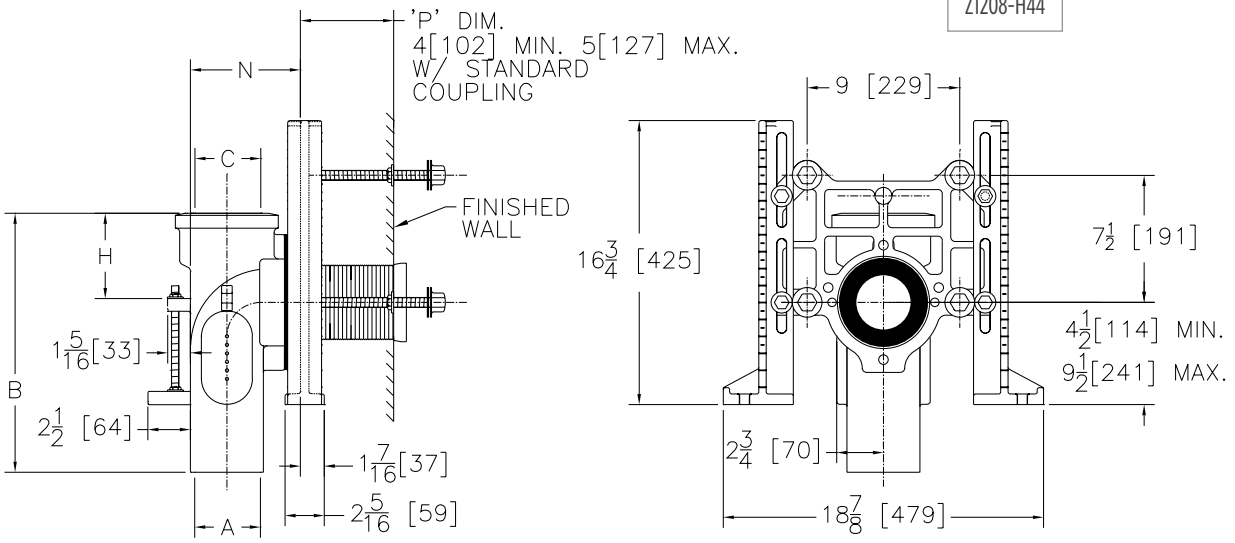

*Regularly furnished unless otherwise specified.

Items designated as Best Sellers are most specified and are generally in stock for shipment.

For additional product information, please visit www.zurn.com

◷ This symbol denotes a product that is engineered to reduce installation and rework time.

For Additional System Tools See "Z1200 Carrier Tools and Accessories" on page 210

Z1209-N VERTICAL OFFSET SIPHON JET WATER CLOSET SUPPORT SYSTEM – NO-HUB

ENGINEERING SPECIFICATION

Zurn Z1209-N( )4 vertical offset siphon jet water closet provides a rigid system with ( ) size no-hub connections and 2" vent. Comes complete with Dura-Coated cast iron main fitting, universal floor mounted supports, adjustable faceplate, corrosion resistant adjustable polymer coupling with integral test cap, fixture bolts, trim, and stud protectors. Includes rear anchor tie down and bonded Neo-Seal gasket.

NOTES

1. Minimum "P" dimension obtainable = 2".
2. Feet anchored to floor using minimum 1/2" diameter anchors through rear slots on carrier feet.
3. Rear anchor foot required for secure installation.

Z1209-NR

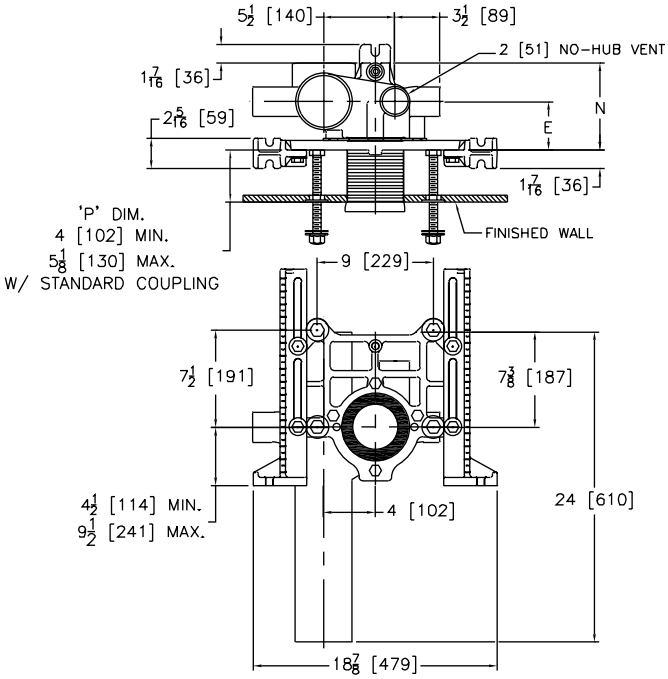

Product Number	Dimensions in inches [mm] A	Dimensions in inches [mm] B	Approximate Weight lb [kg]
Z1209-NL4	3-3/4 [95]	6-3/4 [171]	67 [30]
Z1209-NR4			
Z1209-ND4	4-1/8 [104]	8-1/4 [210]	109 [49]

PREFIXES	DESCRIPTION		
Z1209*	D.C.C.I. System with 4" Adjustable Coupling	Combine with Fitting Type for Pricing	
FITTING TYPE			
-NL4	4" No-Hub Stack, Left-Hand Offset Inlet, 2" Left-Hand Vent	1,415.00	–
-NR4	4" No-Hub Stack, Right-Hand Offset Inlet, 2" Right-Hand Vent	1,415.00	–
-ND4	4" No-Hub Stack, Double Inlet, 2" Vent	–	2,429.00
SUFFIXES			**ADD**
–B	Blowout Type Fixture Support	N/C	N/C
–CC	Corrosion Resistant Cast Iron Coupling (6" to 12")	N/C	N/C
–CL	Coupling Length Greater than 12"- Per Inch (Specify Length)	102.00	203.00
–JJ	Two 2" Auxiliary Inlets	724.00	724.00
–JS	Stack Side 2" Auxiliary Inlet	365.00	365.00
–JV	Vent Side 2" Auxiliary Inlet	365.00	365.00
–M	Auxiliary Foot Support (Required for P-Dim. 10" thru 18")	324.00	645.00
⏲ –PF	Pre-Fab Foot	N/C	N/C
⏲ –PS	Pre-Fab Slotted Foot	N/C	N/C
⏲ –RYK	Unistrut Pre-Fab Foot	N/C	N/C
–VP	Vandal-Proof Trim	137.00	270.00
–X3	3" Foot Extension Assembly	90.00	176.00
–X4	4" Foot Extension Assembly	115.00	227.00
⏲ –45	Finishing Frame for Siphon Jet System (For Blowout System specify -45-B)	84.00	167.00
⏲ –50	Flush Valve Supply Support for Water Closet (Previously Z1210-50)	90.00	176.00
			DEDUCT
–F	Floor Mounted, Back Outlet Fixture Support	-158.00	-315.00
BEST SELLERS			**LIST PRICE**
Z1209-ND4-JV			2,794.00
Z1209-NL4			1,415.00
Z1209-NR4			1,415.00

Items designated as Best Sellers are most specified and are generally in stock for shipment.

⏲ *This symbol denotes a product that is engineered to reduce installation and rework time.*

For Additional System Tools See "Z1200 Carrier Tools and Accessories" on page 210

**Regularly furnished unless otherwise specified.*

For additional product information, please visit www.zurn.com

ZN1209-N VERTICAL OFFSET SIPHON JET – NO-HUB NARROW WALL SYSTEM

ENGINEERING SPECIFICATION

Zurn ZN1209-N( )4 narrow wall vertical offset siphon jet water closet provides a rigid system with 4″ size no-hub connection and 2″ vent. Comes complete with Dura-Coated cast iron main fitting, separable faceplate rigidly mounted on fitting, universal floor mounted supports, corrosion resistant adjustable ABS coupling with integral test cap, fixture bolts, trim, and stud protectors. Includes rear anchor tie down and bonded Neo-Seal gasket.

NOTES

1. Feet anchored to floor using minimum 1/2″ diameter anchors through rear slots on carrier feet.
2. Rear anchor foot required for secure installation.

Product Number	Approximate Weight lb [kg]
ZN1209-NL4	67 [30]
ZN1209-NR4	
ZN1209-ND4	109 [49]

PREFIXES	DESCRIPTION	SINGLE	DOUBLE
ZN1209*	D.C.C.I. System with 4″ Adjustable Coupling	Combine with Fitting Type for Pricing	
FITTING TYPE			
-NL4	4″ No-Hub Stack, Left-Hand Offset Inlet, 2″ Left-Hand Vent	1,415.00	–
-NR4	4″ No-Hub Stack, Right-Hand Offset Inlet, 2″ Right-Hand Vent	1,415.00	–
-ND4	4″ No-Hub Stack, Double Inlet, 2″ Vent	–	2,429.00
SUFFIXES			**ADD**
–B	Blowout Type Fixture Support	N/C	N/C
–CC	Corrosion Resistant Cast Iron Coupling (6″ to 12″)	N/C	N/C
–JJ	Two 2″ Auxiliary Inlets	724.00	724.00
–JS	2″ Stack Side Auxiliary Inlet	365.00	365.00
–JV	2″ Vent Side Auxiliary Inlet	365.00	365.00
–VP	Vandal-Proof Trim	137.00	270.00
–X3	3″ Foot Extension Assembly	90.00	176.00
–X4	4″ Foot Extension Assembly	115.00	227.00
⏲ –45	Finishing Frame for Siphon Jet System (For Blowout System specify -45-B)	84.00	167.00
⏲ –50	Flush Valve Supply Support for Water Closet (Previously Z1210-50)	90.00	176.00

BEST SELLERS	LIST PRICE
ZN1209-ND4	2,429.00
ZN1209-NL4	1,415.00
ZN1209-NL4-JS	1,780.00
ZN1209-NR4	1,415.00

ZN1209-NL4 (Single)

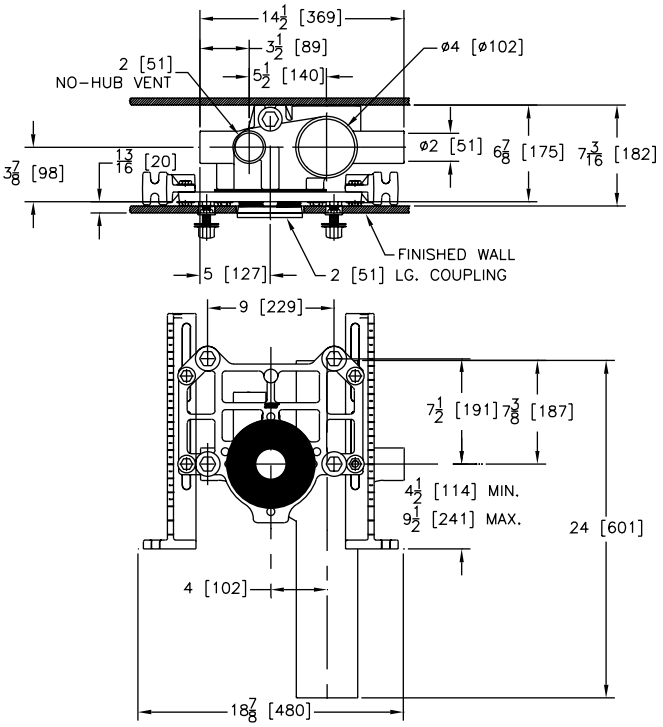

ZN1209-ND4 (Double)

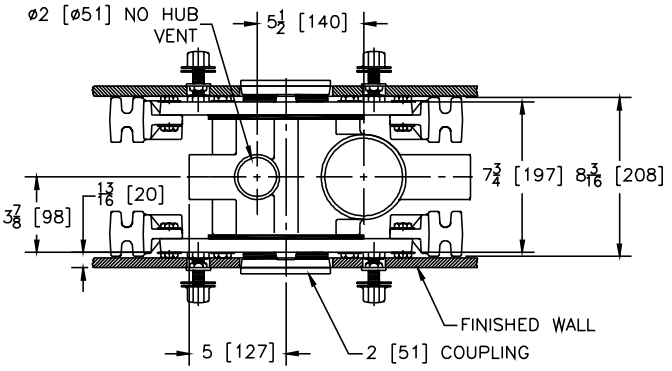

*Regularly furnished unless otherwise specified.

For additional product information, please visit www.zurn.com

Items designated as Best Sellers are most specified and are generally in stock for shipment.

⏲ *This symbol denotes a product that is engineered to reduce installation and rework time.*

For Additional System Tools See "Z1200 Carrier Tools and Accessories" on page 210

Z1212 WALL CLOSET SUPPORT SYSTEM

ENGINEERING SPECIFICATION

Zurn Z1212 Dura-Coated cast iron wall closet support system comes complete with adjustable faceplate rigidly mounted on reversible foot supports, ABS coupling with integral test cap, fixture bolts, trim, stud protectors, and bonded Neo-Seal gasket.

NOTES

1. For plastic pipe installation, use male thread by socket adaptor – DO NOT THREAD PLASTIC PIPE. (Per ASTM Specification #D2665 X1.6.1.)
2. Piping must be rigidly secured to prevent deflection (by others).

Product Number	Approximate Weight lb [kg]
Z1212	30 [14]

PREFIXES	DESCRIPTION	PIPE SIZE	LIST PRICE
Z1212	D.C.C.I. System with 4″ Adjustable Coupling	4″	861.00
SUFFIXES			**ADD**
–B	Adapter for Blowout Type Fixture Support		N/C
–CL	Custom length greater than 12″- Per Inch (Specify Length)		102.00
–F	Floor Mounted, Back Outlet Fixture Support		158.00
–VP	Vandal-Proof Finish Trim		137.00
–X4	4″ Foot Extension Assembly		115.00
⏲ –45	Finishing Frame for Siphon Jet System (For Blowout System specify -45-B)		84.00

BEST SELLERS	LIST PRICE
Z1212-B	861.00
Z1212-F	1,018.00

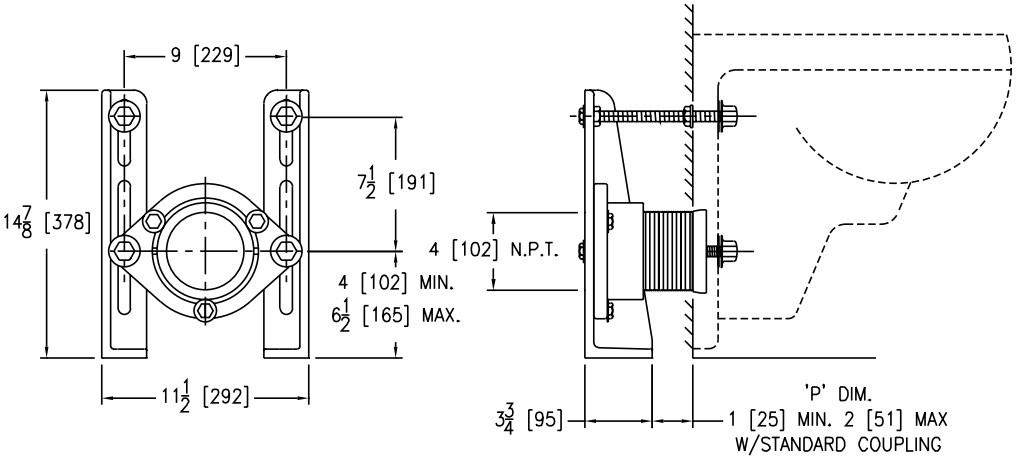

Items designated as Best Sellers are most specified and are generally in stock for shipment.

⏲ This symbol denotes a product that is engineered to reduce installation and rework time.

For Additional System Tools See "Z1200 Carrier Tools and Accessories" on page 210

**Regularly furnished unless otherwise specified.*

For additional product information, please visit www.zurn.com

Z1213-N 4″ VERTICAL SIPHON JET WATER CLOSET SUPPORT SYSTEM – 2″ OR 4″ TOP VENT CLOSET FITTING ONLY (NO SUPPORT)

ENGINEERING SPECIFICATION

Zurn Z1213-N4( ) vertical siphon jet water closet provides a rigid system with 4″ No-Hub connection and 2″ or 4″ (specify) top vent connection. Comes complete with Dura-Coated cast iron main fitting, corrosion-resistant, adjustable ABS coupling with integral test cap, bolt kit, and bonded Neo-Seal gasket for floor mounted back outlet water closet. Standard fixture support is not required.

NOTES

Minimum "P" dimension obtainable = 1-1/4″ [32].

Product Number	A Vent Size	Approximate Weight lb [kg]
Z1213-N42	2 [51]	19 [9]
Z1213-N44	4 [102]	

PREFIXES	DESCRIPTION	"A" VENT SIZE	LIST PRICE
Z1213*	D.C.C.I. System with 4″ Adjustable Coupling	2″	**Combine with Fitting Type for Pricing**
FITTING TYPE			
-N42	4″ No-Hub, 2″ No-Hub Vent		**1,455.00**
-N44	4″ No-Hub, 4″ No-Hub Vent		**1,455.00**
SUFFIXES			**ADD**
–CC	Corrosion Resistant Cast Iron Coupling - 6″ thru 12″ long (Cannot be used with -CL)		**N/C**
–CL	Coupling Length Greater than 12″ - Per inch (Cannot be used with -CC)		**102.00**
BEST SELLER			**LIST PRICE**
Z1213-N42			**1,455.00**

Z1213-N44

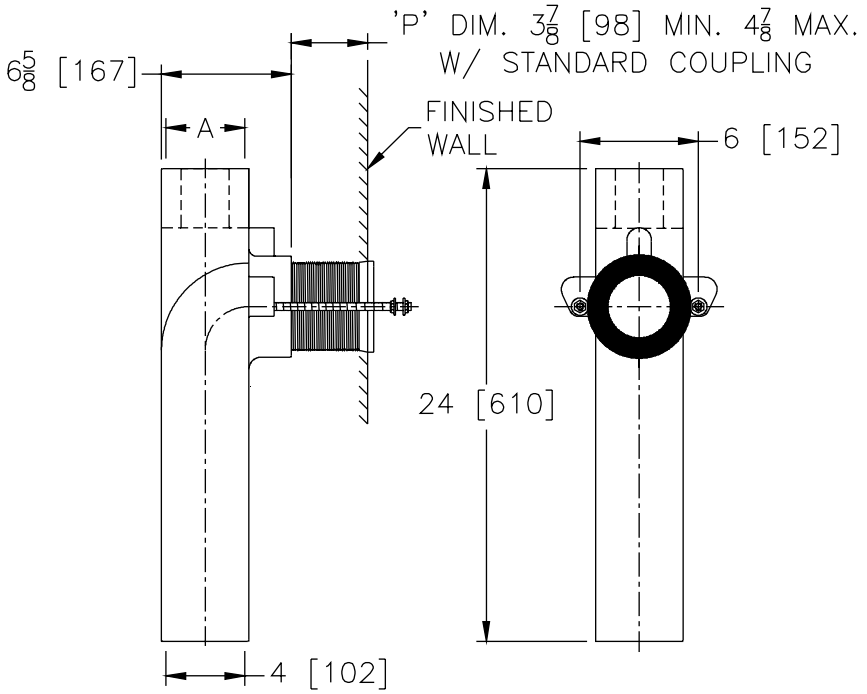

*Regularly furnished unless otherwise specified.

For additional product information, please visit www.zurn.com

Items designated as Best Sellers are most specified and are generally in stock for shipment.

This symbol denotes a product that is engineered to reduce installation and rework time.

For Additional System Tools See "Z1200 Carrier Tools and Accessories" on page 210

Z1216 90° DOUBLE NO-HUB SYSTEM FOR FLOOR MOUNTED BACK OUTLET WATER CLOSETS

ENGINEERING SPECIFICATION

Zurn Z1216 Dura-Coated cast iron 90° water closet features double no-hub fitting with anti-crossover baffles and 2″ no-hub center vent for floor mounted, back outlet water closets.

Product Number	Approximate Weight lb [kg]
Z1216	31 [14]

PREFIXES	DESCRIPTION	VENT SIZE	LIST PRICE
Z1216*	D.C.C.I. No-Hub System	2″	**1,639.00**
SUFFIXES			**ADD**
–J	45° Auxiliary Inlet		**365.00**

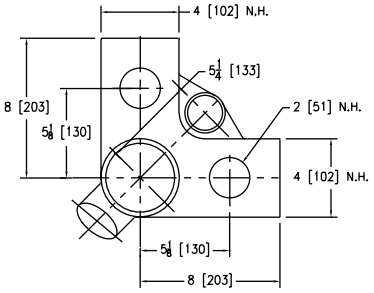

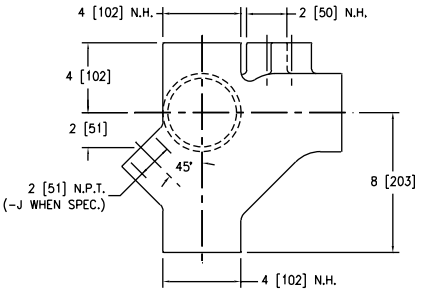

Items designated as Best Sellers are most specified and are generally in stock for shipment.

This symbol denotes a product that is engineered to reduce installation and rework time.

For Additional System Tools See "Z1200 Carrier Tools and Accessories" on page 210

**Regularly furnished unless otherwise specified.*

For additional product information, please visit www.zurn.com

Z1217 COUPLING TYPE SYSTEM – WALL URINAL/SERVICE SINK

ENGINEERING SPECIFICATION

Zurn Z1217 service sink support system with fitting. Complete with Dura-Coated rectangular steel uprights with welded feet, adjustable face plate and upper support plate, Z1208 fitting with 2" vent, corrosion-resistant adjustable ABS coupling with internal test cap, fixture bolts, trim and bonded "Neo-Seal" gasket.

NOTES

Dimensional data for letter dimensions depends on fixture type and manufacturer. See Zurn Carrier/Fixture Rough-In information at www.Zurn.com for specific rough-in dimensions.

Product Number	Outlet inch [mm]	Approximate Weight lb [kg]
Z1217	4 [102]	63 [29]

PREFIXES	DESCRIPTION	VENT SIZE	LIST PRICE
Z1217*	D.C.C.I. No-Hub System with "ZZ" Coupling	2"	**1,432.00**
SUFFIXES			**ADD**
–B	Blow-Out Type Fixture Support		**N/C**
–CC	Corrosion Resistant 6" Long Cast Iron Coupling		**N/C**
–CL	Custom length greater than 6"- Per Inch (Specify Length)		**61.00**
–F4	Z1208 Fitting with 4" Vent		**N/C**
–F32	3" Z1208 Fitting with 4" Vent		**N/C**
–VP	Vandal-Proof Trim		**132.00**
–WS	Wall Support Valve Plate (Specify Valve Name and Number)		**151.00**
BEST SELLERS			**LIST PRICE**
Z1217-B			**1,432.00**
Z1217-B-F32			**1,432.00**
Z1217-F2			**1,432.00**

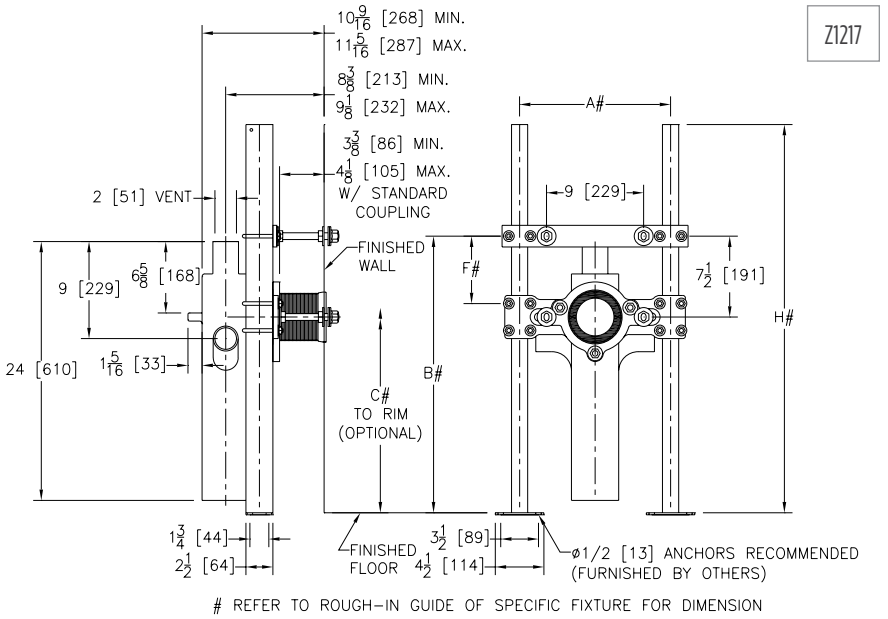

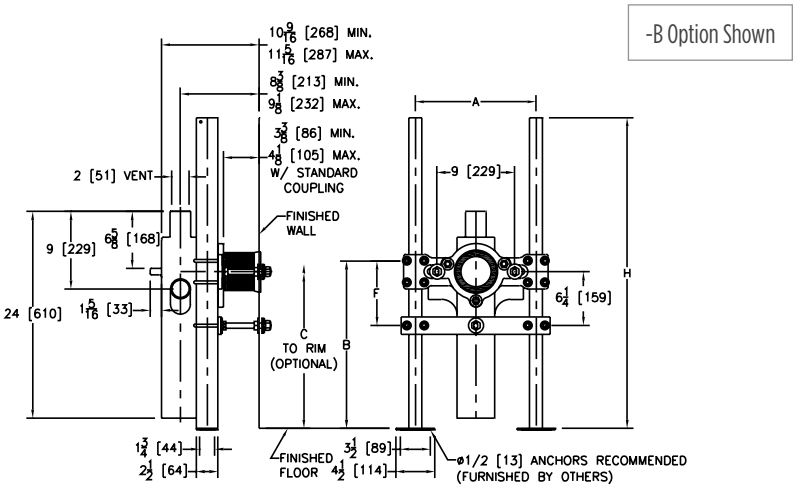

*Regularly furnished unless otherwise specified.

Items designated as Best Sellers are most specified and are generally in stock for shipment.

For additional product information, please visit www.zurn.com

This symbol denotes a product that is engineered to reduce installation and rework time.

For Additional System Tools See "Z1200 Carrier Tools and Accessories" on page 210

Z1218 COUPLING TYPE SYSTEM – WALL URINAL/SERVICE SINK

ENGINEERING SPECIFICATION

Zurn Z1218 service sink support system comes complete with Dura-Coated rectangular steel uprights with welded feet, adjustable faceplate and upper support plate, adjustable corrosion-resistant coupling, fixture bolts, trim, and bonded Neo-Seal gasket.

NOTES

Dimensional data for letter dimensions depends on fixture type and manufacturer. See Zurn Carrier/Fixture Rough-In information at www.Zurn.com for specific rough-in dimensions.

Product Number	Outlet inch [mm]	Approximate Weight lb [kg]
Z1218	3 [76], 4 [102]	63 [29]

PREFIXES	DESCRIPTION	LIST PRICE
Z1218*	Dura-Coated System with Adjustable Coupling	1,195.00
SUFFIXES		**ADD**
–B	Blow-Out Type Fixture Support	N/C
–VP	Vandal-Proof Trim	132.00
–WS	Wall Support Valve Plate (Specify Valve Name and Number)	151.00
BEST SELLERS		**LIST PRICE**
Z1218-3		1,195.00
Z1218-3IP-B		1,195.00
Z1218-4		1,195.00
Z1218-4IP-B		1,195.00

Z1218

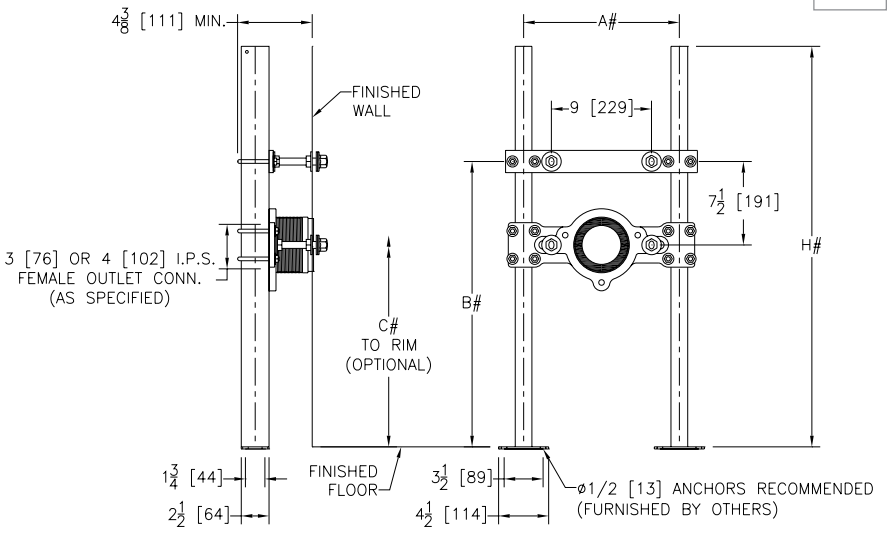

REFER TO ROUGH–IN GUIDE OF SPECIFIC FIXTURE FOR DIMENSION

-B Option Shown

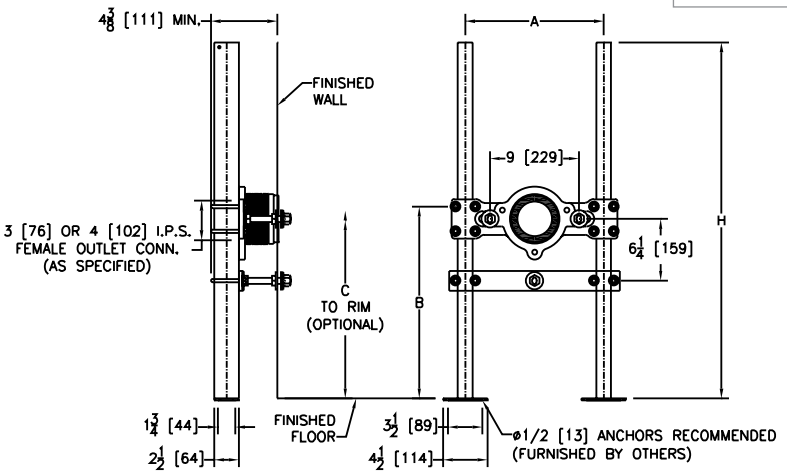

Items designated as Best Sellers are most specified and are generally in stock for shipment.

This symbol denotes a product that is engineered to reduce installation and rework time.

For Additional System Tools See "Z1200 Carrier Tools and Accessories" on page 210

**Regularly furnished unless otherwise specified.*

For additional product information, please visit www.zurn.com

Z1221 PLATE TYPE SYSTEM – WALL URINALS

ENGINEERING SPECIFICATION

Zurn Z1221 wall urinal support system with top support plate comes complete with Dura-Coated rectangular steel uprights with welded feet, adjustable support plate, and mounting fasteners.

NOTES

Dimensional data for letter dimensions depends on fixture type and manufacturer. See Zurn Carrier/Fixture Rough-In information at www.Zurn.com for specific rough-in dimensions.

BEST SELLERS	LIST PRICE
Z1221-UNIV	750.00
Z1221-UNIV-42	750.00
Z1221-UNIV-48	750.00

Product Number	Approximate Weight lb [kg]
Z1221	28 [13]

PREFIXES	DESCRIPTION	SINGLE	DOUBLE
Z1221*	Dura-Coated System with Universal Plate	750.00	992.00
SUFFIXES			ADD
–EZ	Easy-to-Install Assembly	257.00	512.00
–58	Flush Valve Supply Support	90.00	176.00

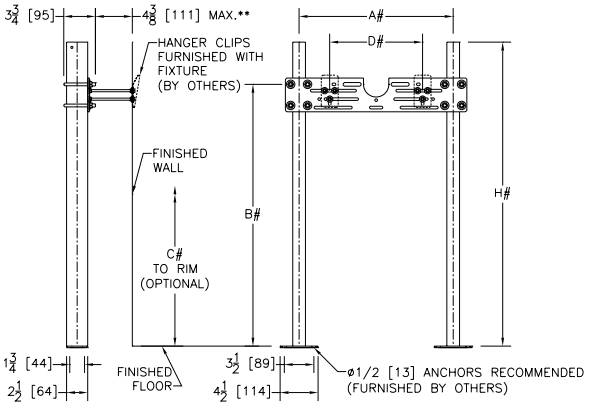

Z1222 PLATE TYPE SYSTEM – WITH BEARING PLATE

ENGINEERING SPECIFICATION

Zurn Z1222 wall urinal support system comes complete with Dura-Coated carbon structural steel rectangular tubing uprights, conforming to ASTM A500 Grade C, with welded base feet having slotted floor anchor holes. Lower bearing plate is vertically adjustable with slot to accommodate bearing jack placement. Upper Universal hanger plate is pre-notched for back spud inlet and designed for various hardware positions and fixtures. Includes mounting fasteners and hardware.

NOTES

Dimensional data for letter dimensions depends on fixture type and manufacturer. See Zurn Carrier/Fixture Rough-In information at www.Zurn.com for specific rough-in dimensions.

BEST SELLERS	LIST PRICE
Z1222-UNIV	838.00
Z1222-UNIV-42	838.00
Z1222-(See Carrier Code Book)	POA

Product Number	Approximate Weight lb [kg]
Z1222	30 [14]

PREFIXES	DESCRIPTION	SINGLE	DOUBLE
Z1222*	Dura-Coated System with Universal Plate	838.00	1,168.00
SUFFIXES			ADD
–EZ	Easy-to-Install Assembly	257.00	512.00
–UA	Urinal Adapter	185.00	370.00
–58	Flush Valve Supply Support	90.00	176.00

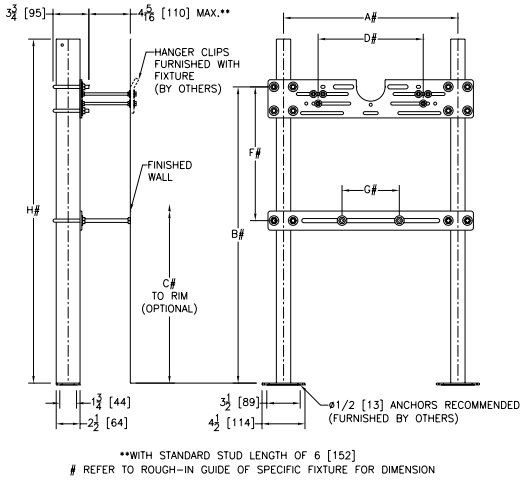

**Regularly furnished unless otherwise specified.*

For additional product information, please visit www.zurn.com

Items designated as Best Sellers are most specified and are generally in stock for shipment.

This symbol denotes a product that is engineered to reduce installation and rework time.

For Additional System Tools See "Z1200 Carrier Tools and Accessories" on page 210

Z1223 PLATE TYPE SYSTEM – TROUGH URINALS

ENGINEERING SPECIFICATION

Zurn Z1223 lavatory support system with top support plate comes complete with Dura-Coated rectangular steel uprights with welded feet, adjustable support plate, and mounting fasteners.

NOTES

Dimensional data for letter dimensions depends on fixture type and manufacturer. See Zurn Carrier/Fixture Rough-In information at www.Zurn.com for specific rough-in dimensions.

Product Number	Approximate Weight lb [kg]
Z1223	33 [15]

PREFIXES	DESCRIPTION	LIST PRICE
Z1223*	Dura-Coated System with Support Plate	1,919.00
SUFFIXES		**ADD**
–1	Longer Urinal (For Ea. 1′ over 5′) Per Foot	388.00
–2	Bearing Plate Assembly	178.00

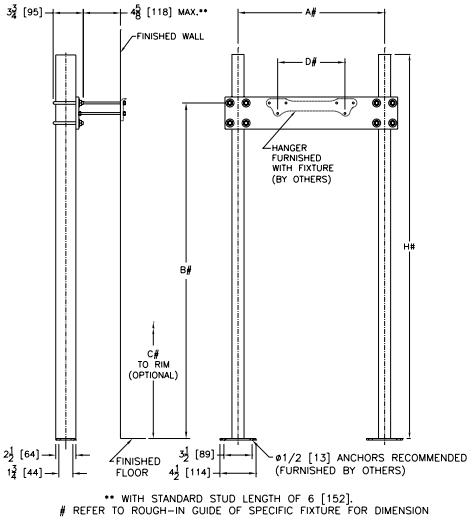

Z1223 (Single)

Z1224 PLATE TYPE SYSTEM – LAVATORY WITH BACK

ENGINEERING SPECIFICATION

Zurn Z1224 lavatory support system with top support plate comes complete with Dura-Coated rectangular steel uprights with welded feet, adjustable support plate, and mounting fasteners.

NOTES

Dimensional data for letter dimensions depends on fixture type and manufacturer. See Zurn Carrier/Fixture Rough-In information at www.Zurn.com for specific rough-in dimensions.

Product Number	Approximate Weight lb [kg]
Z1224	28 [13]
Z1224-D	52 [24]

PREFIXES	DESCRIPTION	SINGLE	DOUBLE
Z1224*	Dura-Coated System with Universal Plate	750.00	–
Z1224-D	Back-to-Back System	–	992.00
SUFFIXES			**ADD**
⏲ –CB	Carrier Bank (Per Each)	POA	POA
–D	Back-to-Back System	See Prefix Z1224-D	
⏲ –EZ	Easy-to-Install Assembly	257.00	512.00
–SL	Stud Length Over 6″ - Per Inch (Specify Length)	53.00	105.00
–WS	Wall Support Valve Plate (Specify Valve Name and Number)	151.00	302.00
–2	Bearing Plate Assembly	92.00	182.00

BEST SELLERS	LIST PRICE
Z1224-75-DOUBLE	992.00
Z1224-75-SINGLE	750.00
Z1224-75-TRIPLE	POA

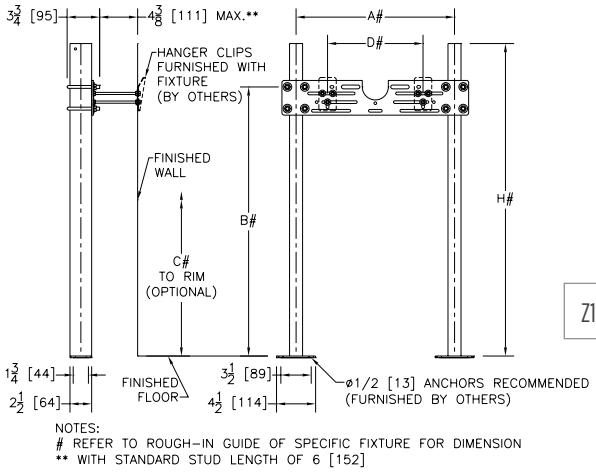

Z1224 (Single)

Items designated as Best Sellers are most specified and are generally in stock for shipment.

⏲ This symbol denotes a product that is engineered to reduce installation and rework time.

For Additional System Tools See "Z1200 Carrier Tools and Accessories" on page 210

**Regularly furnished unless otherwise specified.*

For additional product information, please visit www.zurn.com

Z1225 PLATE TYPE SYSTEM – WATER COOLERS

ENGINEERING SPECIFICATION

Zurn Z1225 water cooler support system with top and bottom plates comes complete with Dura-Coated rectangular steel uprights with welded feet, adjustable support plates, and mounting fasteners.

NOTES

Dimensional data for letter dimensions depends on fixture type and manufacturer. See Zurn Carrier/Fixture Rough-In information at www.Zurn.com for specific rough-in dimensions.

Product Number	Approximate Weight lb [kg]
Z1225	30 [14]
Z1225-D	59 [27]

PREFIXES	DESCRIPTION	SINGLE	DOUBLE
Z1225*	Dura-Coated System with Universal Plate	838.00	–
Z1225-D	Back-to-Back System	–	1,168.00
SUFFIXES			**ADD**
–BL	Bi-Level Cooler Support	388.00	775.00
–CB	Carrier Bank (Per Each)	POA	POA
BEST SELLERS			**LIST PRICE**
Z1225-BL-UNIV			1,226.00
Z1225-UNIV			838.00

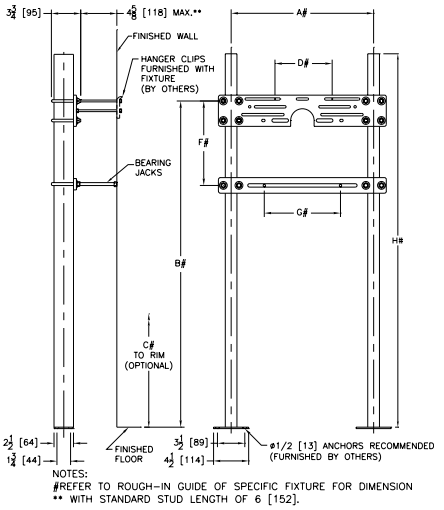

Z1229 PLATE AND EXPOSED ARM – HEAVY SINKS

ENGINEERING SPECIFICATION

Zurn Z1229 heavy sink support system comes complete with Dura-Coated rectangular steel uprights with welded feet, adjustable top support plate, acid resistant epoxy coated exposed arms mounted on cast iron adjustable header, and mounting fasteners.

NOTES

Dimensional data for letter dimensions depends on fixture type and manufacturer. See Zurn Carrier/Fixture Rough-In information at www.Zurn.com for specific rough-in dimensions.

Product Number	Approximate Weight lb [kg]
Z1229	48 [22]

PREFIXES	DESCRIPTION	LIST PRICE
Z1229*	Dura-Coated System with A.R.C. Exposed Arms	2,688.00
SUFFIXES		**ADD**
–WS	Wall Support Valve Plate (Specify Valve Name and Number)	151.00
–1	Longer Sink - Ea. 1′ over 3′ (Specify Length per Foot)	897.00

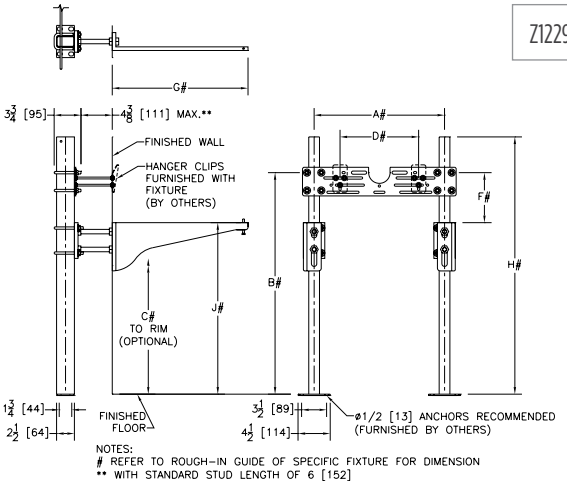

**Regularly furnished unless otherwise specified.*

For additional product information, please visit www.zurn.com

Items designated as Best Sellers are most specified and are generally in stock for shipment.

This symbol denotes a product that is engineered to reduce installation and rework time.

For Additional System Tools See "Z1200 Carrier Tools and Accessories" on page 210

Z1231 CONCEALED ARM SYSTEM – WALL LAVATORIES

ENGINEERING SPECIFICATION

Zurn Z1231 lavatory support system with concealed arms comes complete with Dura-Coated rectangular steel uprights with welded feet, cast iron adjustable headers, concealed arms, steel sleeves, alignment truss, and mounting fasteners.

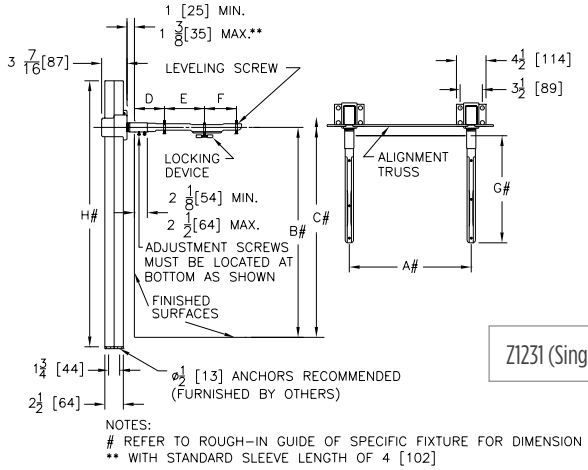

Z1231 (Single)

Product Number	Approximate Weight lb [kg]
Z1231	45 [20]
Z1231-D	63 [29]

PREFIXES	DESCRIPTION	SINGLE	DOUBLE
Z1231*	Dura-Coated System with Concealed Arms	**992.00**	**–**
Z1231-D	Back-to-Back System	**–**	**1,407.00**
SUFFIXES			**ADD**
–AL	Adapter Lug	**N/C**	**N/C**
–CB	Carrier Bank (Per Each)	**POA**	**POA**
–D	Back-to-Back System	**See Prefix Z1231-D**	
–E2	Concealed Arm Escutcheons 2″ Long	**168.00**	**334.00**
–SL	Stud Length Over 6″ (Per Inch) (Specify Length)	**53.00**	**105.00**
–WS	Wall Support Valve Plate (Specify Valve Name and Number)	**151.00**	**302.00**
–79	ADA Rough-In	**64.00**	**126.00**

BEST SELLERS	LIST PRICE
Z1231-UNIV-80	**992.00**
Z1231-UNIV-81	**992.00**
Z1231-(See Carrier Code Book)	**POA**
Z1231-D-(See Carrier Code Book)	**POA**

Z1231-EZ CONCEALED ARM SYSTEM – WALL LAVATORIES

ENGINEERING SPECIFICATION

Zurn Z1231-EZ lavatory support system with concealed arms comes complete with Dura-Coated rectangular steel uprights with welded feet, cast iron adjustable headers, concealed arms, steel sleeves, adjusting bars, and mounting fasteners.

Patented

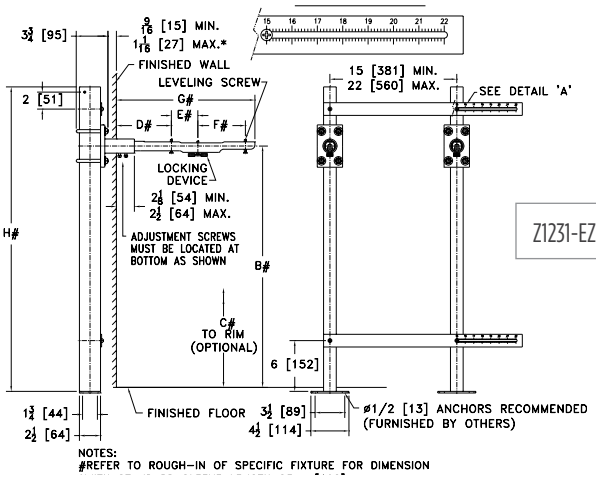

Z1231-EZ (Single)

Product Number	Approximate Weight lb [kg]
Z1231-EZ	45 [20]
Z1231-EZD	63 [29]

PREFIXES	DESCRIPTION	SINGLE	DOUBLE
Z1231-EZ*	Dura-Coated System with Concealed Arms	**1,282.00**	**–**
Z1231-EZ-D	Back-to-Back System	**–**	**1,870.00**
SUFFIXES			**ADD**
–AL	Adapter Lug	**N/C**	**N/C**
–D	Back-to-Back System	**See Prefix Z1231-EZ-D**	
–E2	Concealed Arm Escutcheons 2″ Long	**168.00**	**334.00**

BEST SELLERS	LIST PRICE
Z1231-EZ-D	**1,870.00**
Z1231-EZ	**1,282.00**

Items designated as Best Sellers are most specified and are generally in stock for shipment.

This symbol denotes a product that is engineered to reduce installation and rework time.

For Additional System Tools See "Z1200 Carrier Tools and Accessories" on page 210

**Regularly furnished unless otherwise specified.*

For additional product information, please visit www.zurn.com

Z1231-EZR CONCEALED ARM SYSTEM – FOR WALL LAVATORIES WITH ADJUSTABLE UPRIGHTS AND HEADER PLATES

Patented

ENGINEERING SPECIFICATION

Zurn Z1231-EZR wall lavatory support system comes complete with Dura-Coated carbon structural steel rectangular tubing uprights, conforming to ASTM A500 Grade C, with welded base feet having slotted floor anchor holes. Lower and upper labor-saving plates are marked with an indexed ruler guide for accurate adjustability of upright spacing from 15″ to 22″. Individual slotted header plates provide 2″ of additional horizontal adjustment per plate, allowing for a total horizontal adjustment range of 11″ to 26″. Includes Dura-Coated steel sleeves and cast iron concealed arms with leveling screws and soft set elastomeric locking devices. Uprights, labor-saver plates, and header plates are factory assembled for easy installation. Carrier system exceeds load and deflection requirements as outlined in ASME Standard A112.6.1M at all adjustment positions of the uprights and header plates.

NOTES

Two diagonally spaced anchors per foot are required for correct installation.

Product Number	Approximate Weight lb [kg]
Z1231-EZR	45 [20]
Z1231-EZR-D	63 [29]

PREFIXES	DESCRIPTION	SINGLE	DOUBLE
Z1231-EZR*	Dura-Coated System with Support Plate	1,455.00	–
Z1231-EZR-D	Back-to-Back System	–	2,156.00
SUFFIXES			**ADD**
–AL	Adapter Lug	N/C	N/C
–D	Back-to-Back System	See Prefix Z1231-EZR-D	
–E2	Concealed Arm Escutcheons 2″ Long	168.00	334.00
–WL	Waste Line Sleeve	POA	POA
BEST SELLERS			**LIST PRICE**
Z1231-EZR-80-UNIV-36			1,455.00
Z1231-EZR-81-UNIV-36			1,455.00

Z1231-EZR (Single)

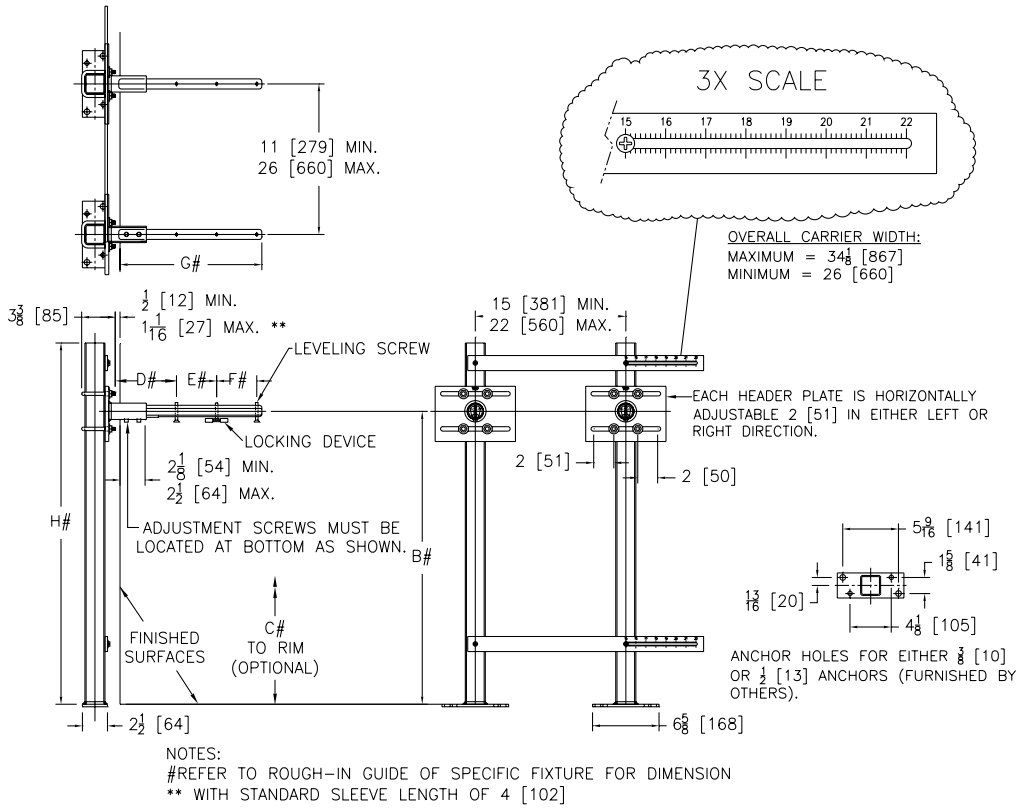

NOTES:
#REFER TO ROUGH–IN GUIDE OF SPECIFIC FIXTURE FOR DIMENSION
** WITH STANDARD SLEEVE LENGTH OF 4 [102]

Regularly furnished unless otherwise specified.

Items designated as Best Sellers are most specified and are generally in stock for shipment.

For additional product information, please visit www.zurn.com

This symbol denotes a product that is engineered to reduce installation and rework time.

For Additional System Tools See "Z1200 Carrier Tools and Accessories" on page 210

Z1236 EXPOSED ARM SYSTEM – WALL LAVATORIES/SINKS

ENGINEERING SPECIFICATION

Zurn Z1236 lavatory support system with exposed arms comes complete with Dura-Coated rectangular steel uprights with welded feet, cast iron adjustable headers, acid resistant epoxy coated cast iron arms, alignment truss, and mounting fasteners.

NOTES

Dimensional data for letter dimensions depends upon fixture type and manufacturer. See Zurn Carrier Code Book at www.Zurn.com for specific rough-in dimensions.

Product Number	Approximate Weight lb [kg]
Z1236	60 [27]
Z1236-D	71 [32]

PREFIXES	DESCRIPTION	SINGLE	DOUBLE
Z1236*	Dura-Coated System with A.R.C. Exposed Arms	1,407.00	–
Z1236-D	Back-to-Back System	–	2,206.00
SUFFIXES			**ADD**
–AL	Adapter Lug	N/C	N/C
–D	Back-to-Back System	See Prefix Z1236-D	
–WS	Wall Support Valve Plate (Specify Valve Name and Number)	151.00	302.00

SEE LEGACY ADDENDUM ON PAGE 369 FOR MORE INFORMATION

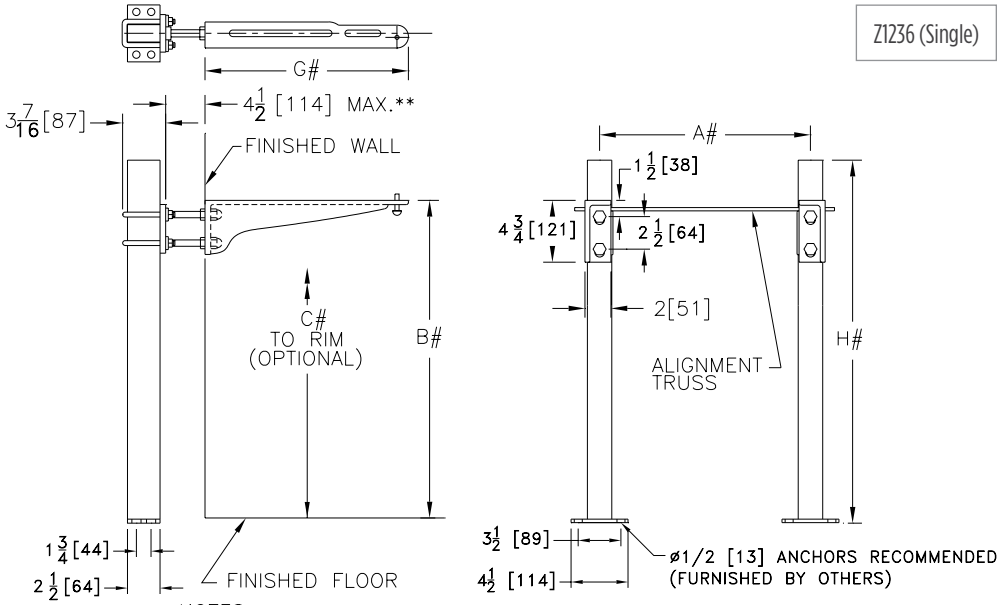

NOTES:
#REFER TO ROUGH–IN GUIDE OF SPECIFIC FIXTURE FOR DIMENSION
** WITH STANDARD STUD LENGTH OF 6 [152].

Z1251 CONCEALED ARM SYSTEM – WALL SUPPORTED

ENGINEERING SPECIFICATION

Zurn Z1251 lavatory support system with concealed arms comes complete with Dura-Coated support plate with integral steel arm sleeves, concealed arms, and mounting fasteners.

Product Number	Approximate Weight lb [kg]
Z1251	18 [8]

PREFIXES	DESCRIPTION	LIST PRICE
Z1251*	Dura-Coated System with Concealed Arms	460.00
SUFFIXES		**ADD**
–E2	Concealed Arm Escutcheons 2" Long	168.00
–79	ADA Rough-In	132.00
BEST SELLERS		**LIST PRICE**
Z1251-F/Z5344		460.00
Z1251-(See Carrier Code Book)		POA

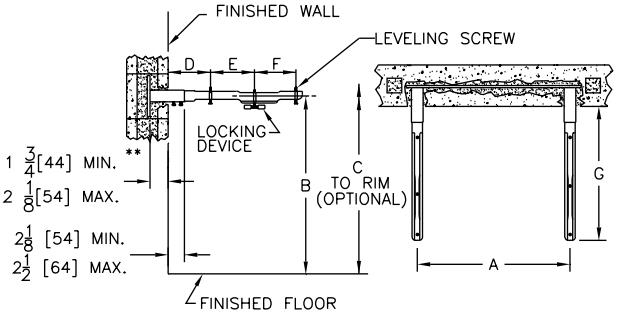

Z1253 ADJUSTABLE CONCEALED ARM SYSTEM – WALL SUPPORTED

ENGINEERING SPECIFICATION

Zurn Z1253 lavatory support system with concealed arms comes complete with adjustable Dura-Coated support plates with arm sleeves, concealed arms, and mounting fasteners.

Product Number	Approximate Weight lb [kg]
Z1253	18 [8]

PREFIXES	DESCRIPTION	LIST PRICE
Z1253*	Dura-Coated System with Concealed Arms	588.00
SUFFIXES		**ADD**
–79	ADA Rough-In	132.00
SEE LEGACY ADDENDUM ON PAGE 369 FOR MORE INFORMATION		

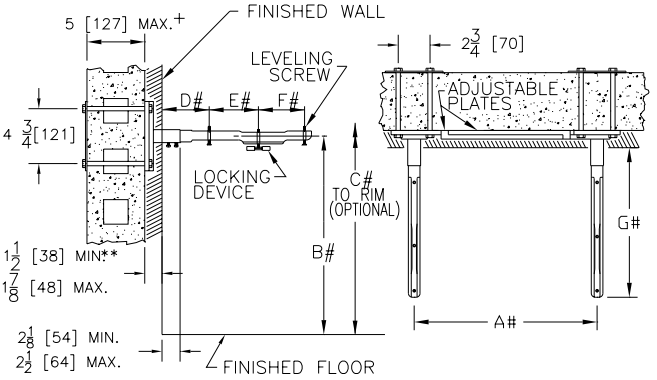

NOTE:
** WITH STANDARD SLEEVE LENGTH OF 4 [102]
+ WITH STANDARD STUD LENGTH OF 6 [152]
# REFER TO ROUGH–IN GUIDE OF SPECIFIC FIXTURE FOR DIMENSION

**Regularly furnished unless otherwise specified.*
For additional product information, please visit www.zurn.com

Items designated as Best Sellers are most specified and are generally in stock for shipment.
This symbol denotes a product that is engineered to reduce installation and rework time.
For Additional System Tools See "Z1200 Carrier Tools and Accessories" on page 210

Z1255 EXPOSED ARM SYSTEM – WALL SUPPORTED

ENGINEERING SPECIFICATION

Zurn Z1255 lavatory support system with exposed arms comes complete with adjustable Dura-Coated support plates, acid resistant epoxy coated cast iron exposed arms, and mounting fasteners.

NOTES

Dimensional data for letter dimensions depends upon fixture type and manufacturer. See Zurn Carrier Code Book at www.Zurn.com for specific rough-in dimensions.

Product Number	Approximate Weight lb [kg]
Z1255	25 [11]

PREFIXES	DESCRIPTION	LIST PRICE
Z1255*	Dura-Coated System with A.R.C. Exposed Arms	978.00
SUFFIXES		**ADD**
◷ –BS	Bar Support Valve Plate (Specify Valve Name and Number)	151.00
–SL	Stud Length Over 6" - Per Inch (Specify Length)	53.00
–VP	Vandal-Proof Trim	132.00

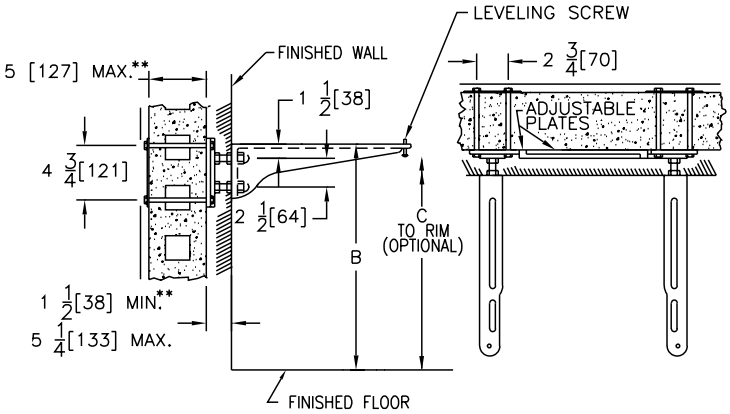

Items designated as Best Sellers are most specified and are generally in stock for shipment.

◷ This symbol denotes a product that is engineered to reduce installation and rework time.

For Additional System Tools See "Z1200 Carrier Tools and Accessories" on page 210

**Regularly furnished unless otherwise specified.*

For additional product information, please visit www.zurn.com

Z1256 EXPOSED ARM SYSTEM – WALL SUPPORTED

ENGINEERING SPECIFICATION

Zurn Z1256 lavatory support with exposed arms comes complete with Dura-Coated support plates, acid resistant epoxy coated cast iron exposed arms, and mounting fasteners.

NOTES

Dimensional data for letter dimensions depends upon fixture type and manufacturer. See Zurn Carrier Code Book at www.Zurn.com for specific rough-in dimensions.

Product Number	Approximate Weight lb [kg]
Z1256	25 [11]

PREFIXES	DESCRIPTION	LIST PRICE
Z1256*	Dura-Coated System with A.R.C. Exposed Arms	785.00
SUFFIXES		**ADD**
⏲ –BS	Bar Support Valve Plate (Specify Valve Name and Number)	151.00
–SL	Stud Length Over 6" - Per Inch (Specify Length)	53.00
–VP	Vandal-Proof Trim	132.00

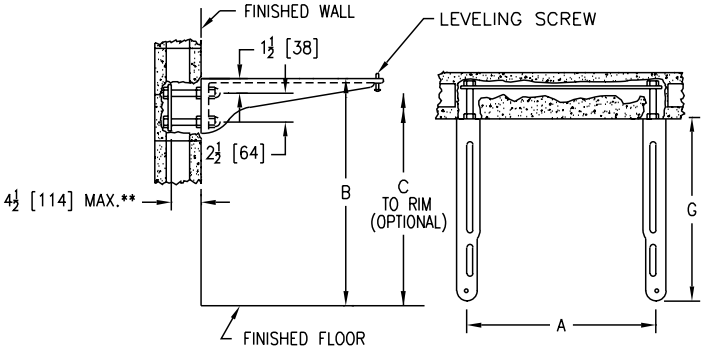

** WITH STANDARD STUD LENGTH OF 6 [152]

Z1257 EXPOSED ARM SYSTEM – WALL SUPPORTED

ENGINEERING SPECIFICATION

Zurn Z1257 wall supported, exposed arm system features Dura-Coated wall plate securing assembly with acid resistant epoxy coated cast iron exposed arms and mounting fasteners.

NOTES

Dimensional data for letter dimensions depends upon fixture type and manufacturer. See Zurn Carrier Code Book at www.Zurn.com for specific rough-in dimensions.

Product Number	Approximate Weight lb [kg]
Z1257	25 [11]

PREFIXES	DESCRIPTION	LIST PRICE
Z1257*	Dura-Coated System with A.R.C. Exposed Arms	978.00
SUFFIXES		**ADD**
⏲ –BS	Bar Support Valve Plate (Specify Valve Name and Number)	151.00
–SL	Stud Length Over 6" - Per Inch (Specify Length)	53.00
–VP	Vandal-Proof Trim	132.00

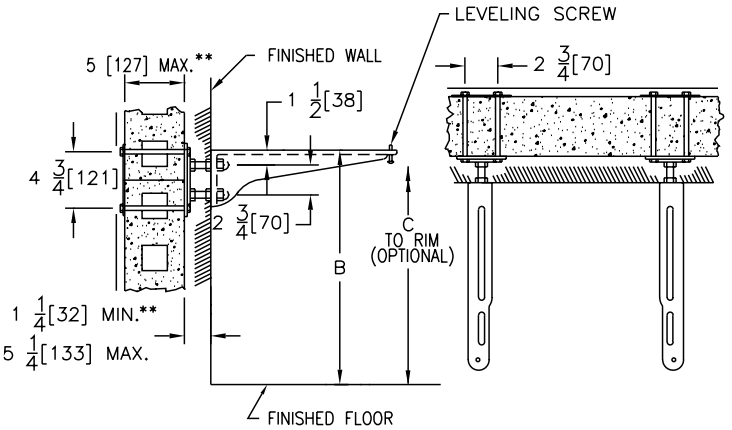

*Regularly furnished unless otherwise specified.

Items designated as Best Sellers are most specified and are generally in stock for shipment.

For additional product information, please visit www.zurn.com

⏲ This symbol denotes a product that is engineered to reduce installation and rework time.

For Additional System Tools See "Z1200 Carrier Tools and Accessories" on page 210

Z1258 EXPOSED ARM SYSTEM – WALL SUPPORTED

ENGINEERING SPECIFICATION

Zurn Z1258 lavatory support system with exposed arms comes complete with adjustable Dura-Coated support plates, acid resistant epoxy coated cast iron exposed arms, and mounting fasteners.

NOTES

Dimensional data for letter dimensions depends upon fixture type and manufacturer. See Zurn Carrier Code Book at www.Zurn.com for specific rough-in dimensions.

Product Number	Approximate Weight lb [kg]
Z1258	25 [11]

PREFIXES	DESCRIPTION	LIST PRICE
Z1258*	Dura-Coated System with A.R.C. Exposed Arms	593.00
SUFFIXES		**ADD**
◷ –BS	Bar Support Valve Plate (Specify Valve Name and Number)	151.00
–SL	Stud Length Over 6" - Per Inch (Specify Length)	53.00
–VP	Vandal-Proof Trim	132.00

SEE LEGACY ADDENDUM ON PAGE 369 FOR MORE INFORMATION

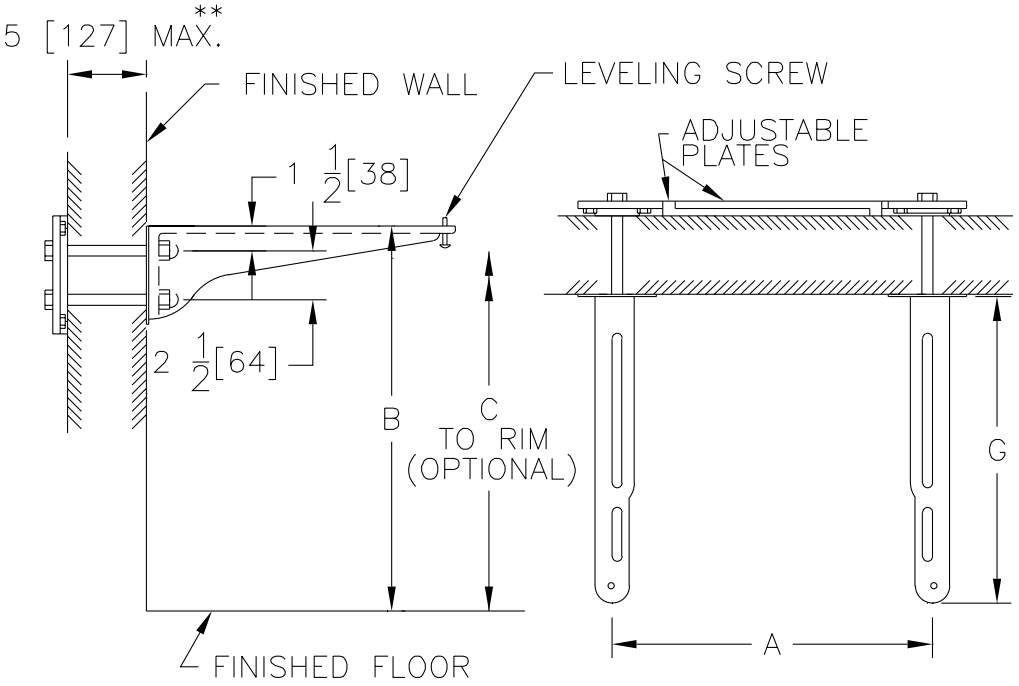

Items designated as Best Sellers are most specified and are generally in stock for shipment.

◷ This symbol denotes a product that is engineered to reduce installation and rework time.

For Additional System Tools See "Z1200 Carrier Tools and Accessories" on page 210

**Regularly furnished unless otherwise specified.*

For additional product information, please visit www.zurn.com

Z1259 PLATE SYSTEM – WALL SUPPORTED

ENGINEERING SPECIFICATION

Zurn Z1259 lavatory support system comes complete with Dura-Coated support plate(s) and mounting fasteners.

NOTES

Dimensional data for letter dimensions depends upon fixture type and manufacturer. See Zurn Carrier Code Book at www.Zurn.com for specific rough-in dimensions.

Product Number	Approximate Weight lb [kg]
Z1259	6 [3]
Z1259-BP	24 [11]
Z1259-D	12 [5]
Z1259-DB	24 [11]
Z1259-SP	12 [5]
Z1259-2	

PREFIXES	DESCRIPTION	SINGLE	DOUBLE
Z1259*	Dura-Coated Plate System	**Combine with Plate Type for Pricing**	
PLATE TYPE			
	Top Back Plate with Studs Only	**208.00**	**–**
-BP	Top Front and Back Plates with Studs and Bottom Front and Back Plates with Bearing Jacks	**368.00**	**–**
-D	Back-to-Back Top Front Plates with Studs Only	**–**	**253.00**
-DB	Back-to-Back Top Front Plates with Studs and Bottom Front Plates with Bearing Jacks	**–**	**421.00**
-SP	Top Front and Back Plate with Studs Only	**253.00**	**–**
-2	Top Back Plate with Studs and Bottom Back Plate with Bearing Jacks	**333.00**	**–**
SUFFIXES			**ADD**
–SL	Stud Length Over 6" - Per Inch (Specify Length)	**53.00**	**105.00**

SEE LEGACY ADDENDUM ON PAGE 369 FOR MORE INFORMATION

Z1259

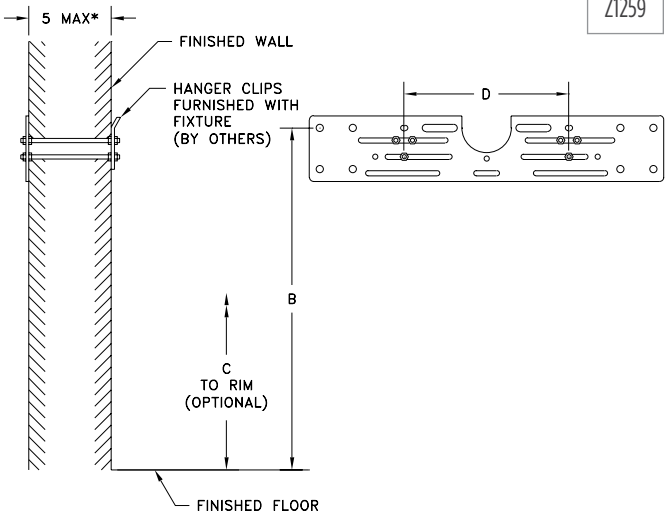

Z1259-BP

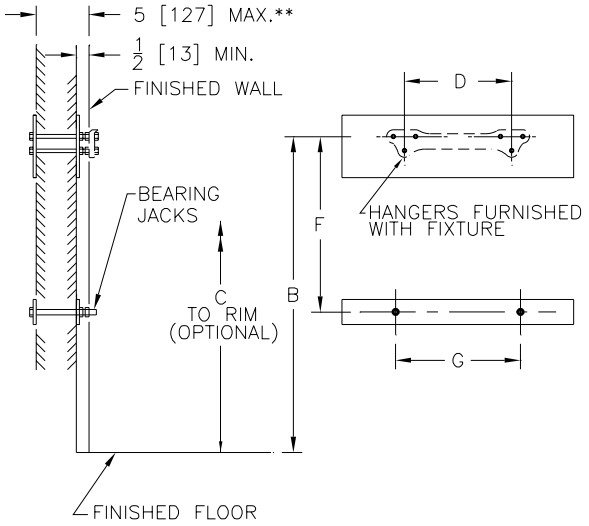

Z1259-2

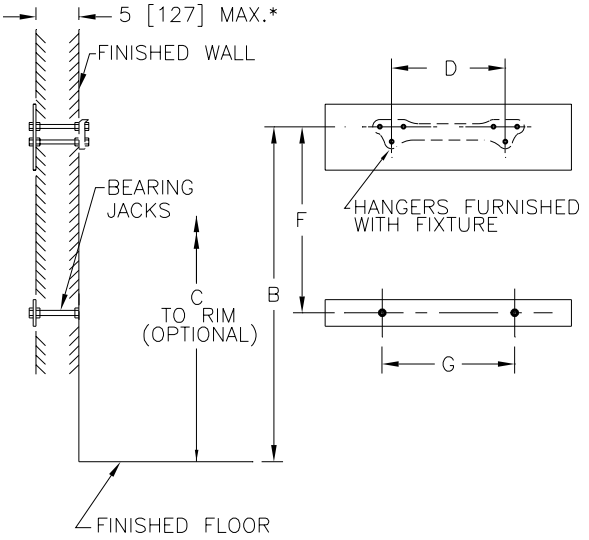

*Regularly furnished unless otherwise specified.

Items designated as Best Sellers are most specified and are generally in stock for shipment.

For additional product information, please visit www.zurn.com

This symbol denotes a product that is engineered to reduce installation and rework time.

For Additional System Tools See "Z1200 Carrier Tools and Accessories" on page 210

Z1280 WOOD STUD SUPPORTED WATER CLOSET CARRIER – NO-HUB

ENGINEERING SPECIFICATION

Zurn Z1280-N( ) residential water closet support system comes complete with Dura-Coated cast iron 3" or 4" no-hub fitting (specify size) with 2" vent, support brackets, corrosion-resistant ABS coupling, fixture bolts and trim, and bonded Neo Seal gasket.

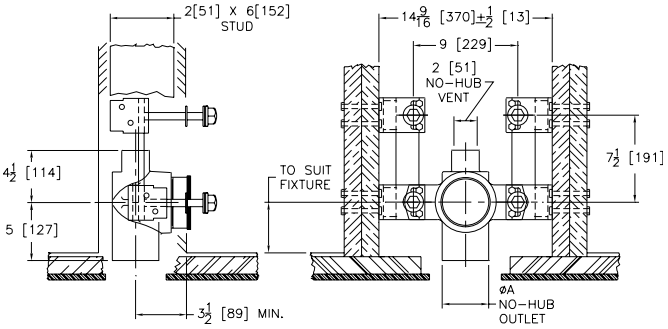

Product Number	A Pipe Size Inches [mm]	Approximate Weight lb [kg]
Z1280-N3-2	3 [76]	30 [14]
Z1280-N4-2	4 [102]	40 [18]

FITTING TYPE		
-N3-2	3" No-Hub Fitting with 2" Vent	**785.00**
-N4-2	4" No-Hub Fitting with 2" Vent	**1,080.00**
SUFFIXES		**ADD**
–X4	4" Foot Extension (For -Y Only)	**115.00**
–Y	Foot Support System	**359.00**
BEST SELLERS		**LIST PRICE**
Z1280-N3-2		**785.00**
Z1280-N4-2		**1,080.00**
SEE LEGACY ADDENDUM ON PAGE 369 FOR MORE INFORMATION		

Z1282 WOOD STUD SUPPORTED WATER CLOSET CARRIER – HUB AND SPIGOT

ENGINEERING SPECIFICATION

Zurn Z1282-H( ) residential water closet support system comes complete with Dura-Coated cast iron 4" spigot outlet fitting with 2" or 4" hub vent connection, support brackets, corrosion-resistant ABS coupling, fixture bolts and trim, and bonded Neo Seal gasket.

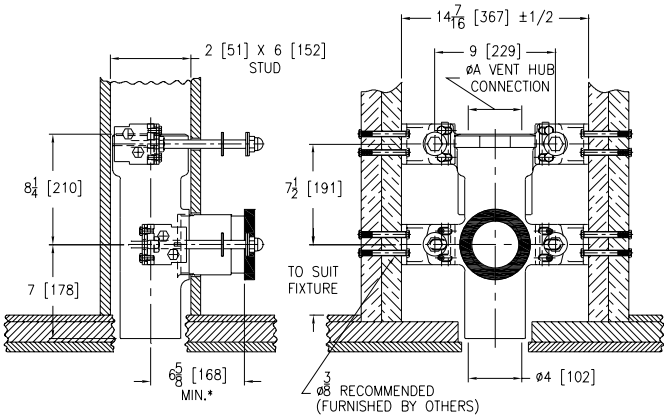

Product Number	Outlet inch [mm]	Approximate Weight lb [kg]
Z1282-H4	4 [102]	42 [19]
Z1282-HD4	4 [102]	54 [24]

PREFIXES	DESCRIPTION	SINGLE	DOUBLE
Z1282*	Dura-Coated Bracket and Fitting System	**Combine with Fitting Type for Pricing**	
FITTING TYPE			
-H4	4" Spigot Outlet Fitting with 4" Hub Vent Connection	**1,119.00**	**–**
-HD4	4" Double Spigot Outlet Fitting with 4" Hub Vent Connection	**–**	**3,536.00**
SUFFIXES			**ADD**
–X4	4" Foot Extension (For -Y Only)		**115.00**
–Y	Foot Support System		**359.00**
SEE LEGACY ADDENDUM ON PAGE 369 FOR MORE INFORMATION			

Items designated as Best Sellers are most specified and are generally in stock for shipment.

This symbol denotes a product that is engineered to reduce installation and rework time.

For Additional System Tools See "Z1200 Carrier Tools and Accessories" on page 210

**Regularly furnished unless otherwise specified.*

For additional product information, please visit www.zurn.com

Z1283 WOOD STUD SUPPORTED WATER CLOSET CARRIER – PLASTIC PIPE

ENGINEERING SPECIFICATION

Zurn Z1283 residential water closet support system comes complete with Dura-Coated support brackets and coupling support, ABS coupling, fixture bolts, trim, and bonded Neo-Seal gasket.

Product Number	Approximate Weight lb [kg]
Z1283-P3	25 [11]

PREFIXES	DESCRIPTION	LIST PRICE
Z1283-P3*	Dura-Coated Bracket System with 3" Yoke	**671.00**
SUFFIXES		**ADD**
–X4	4" Carrier Foot Extension (For -Y Only)	**115.00**
–Y	Foot Support System	**359.00**
BEST SELLER		**LIST PRICE**
Z1283-P3		**671.00**

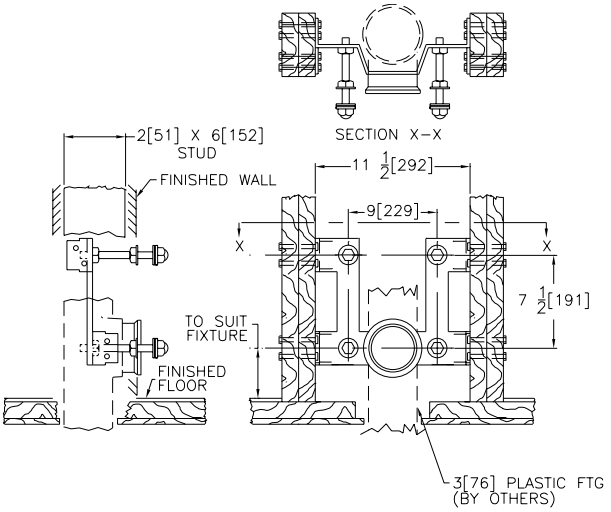

Z1284 CONCRETE FLOOR SUPPORTED WATER CLOSET CARRIER

ENGINEERING SPECIFICATION

Zurn Z1284 4" residential water closet support system comes complete with Dura-Coated cast iron 4" no-hub fitting, 2" vent, support feet, corrosion-resistant ABS coupling, fixture bolts and trim, and bonded Neo-Seal gasket.

Product Number	Approximate Weight lb [kg]
Z1284-N4	40 [18]

PREFIXES	DESCRIPTION	LIST PRICE
Z1284-N4*	Dura-Coated Bracket System with 4" No-Hub Fitting	**1,427.00**
SUFFIXES		**ADD**
–X4	4" Foot Extension Assembly	**115.00**

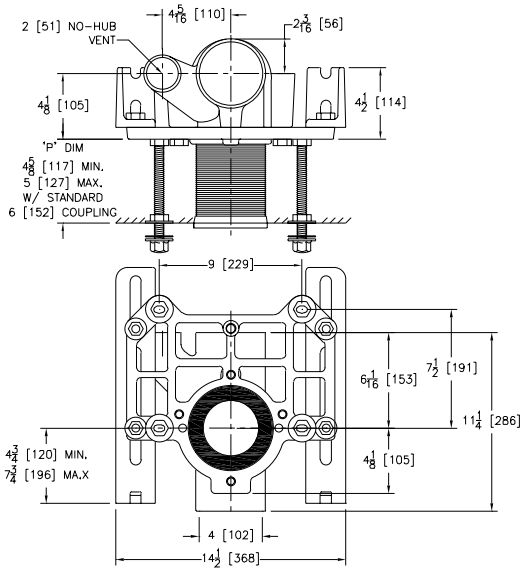

*Regularly furnished unless otherwise specified.

For additional product information, please visit www.zurn.com

Items designated as Best Sellers are most specified and are generally in stock for shipment.

This symbol denotes a product that is engineered to reduce installation and rework time.

For Additional System Tools See "Z1200 Carrier Tools and Accessories" on page 210

Z1285 WOOD STUD SUPPORTED WATER CLOSET CARRIER

ENGINEERING SPECIFICATION

Zurn Z1285 residential water closet support system comes complete with Dura-Coated support brackets and coupling support, ABS coupling, fixture bolts, trim, and bonded Neo-Seal gasket.

Product Number	Approximate Weight lb [kg]
Z1285	25 [11]

PREFIXES	DESCRIPTION	LIST PRICE
Z1285*	Dura-Coated Bracket System	**671.00**
SUFFIXES		**ADD**
–PD3	3" Double Plastic Pipe Connection	**1,026.00**
–X4	4" Foot Extension (For -Y Only)	**115.00**
–Y	Foot Support System	**359.00**

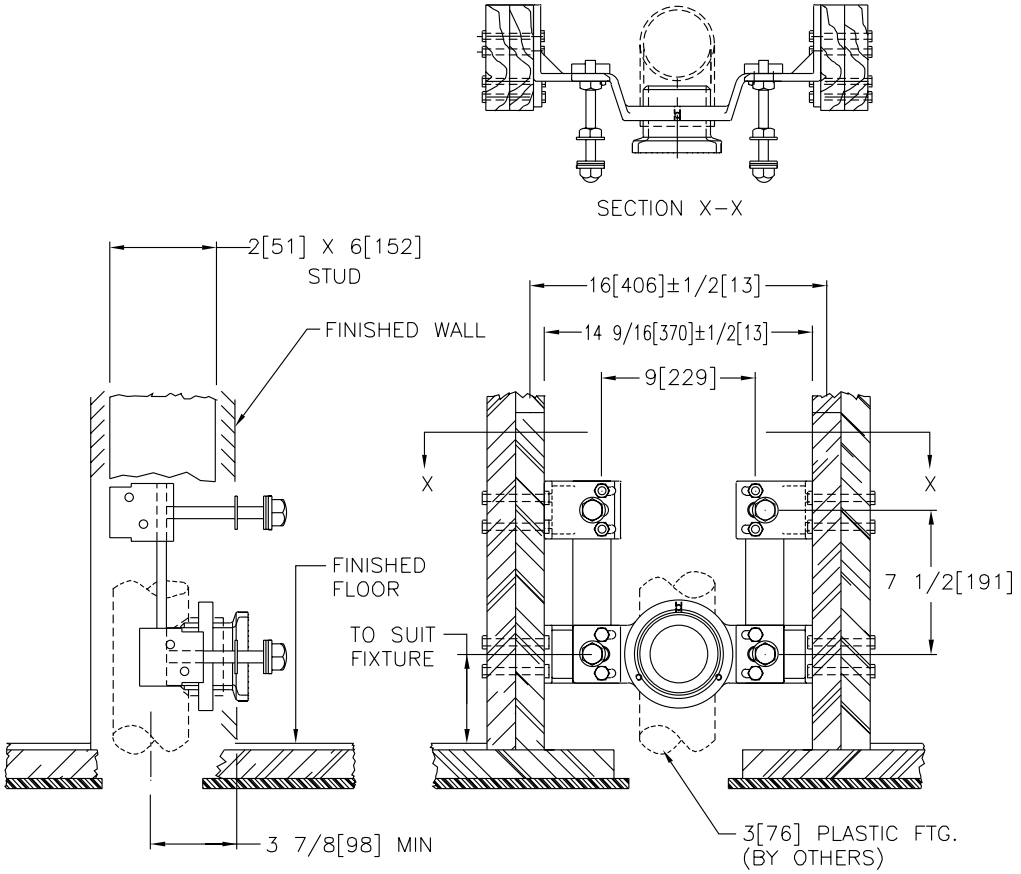

Items designated as Best Sellers are most specified and are generally in stock for shipment.

This symbol denotes a product that is engineered to reduce installation and rework time.

For Additional System Tools See "Z1200 Carrier Tools and Accessories" on page 210

**Regularly furnished unless otherwise specified.*

For additional product information, please visit www.zurn.com

Z1290 EASTERN STYLE WATER CLOSET

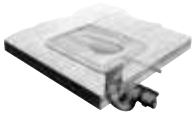

ENGINEERING SPECIFICATION

Zurn Z1290 acid resisting, porcelain enameled, cast iron water closet comes complete with rotating 4" no-hub "P" trap and no-hub coupling to meet various piping requirements, including connection to plastic piping systems where required. Water closet is furnished with integral non-skid foot pads and bowl wash down, non-splashing flushing rim. The water closet is completely self-supporting, requiring no external mounting hardware and is flush with finished floor, providing complete floor drainage into bowl and incorporates waterproofing membrane flashing flange for multiple story installations. Flushing connection is available in 1/2" and 3/4" NPT. Recommended to be used with Zurn flush valve models Z6096AV or Z6196AV with either 2.4, 3.5, or 4.5 gallons per flush. Brackish or sea water may also be used for efficient flushing of entire bowl. For storage and handling, installation, care, and cleaning. (See Form #OF53)

PREFIXES	DESCRIPTION	LIST PRICE
Z1290*	Cast Iron Body with Acid Resisting Porcelain Enamel Finish	POA
SUFFIXES		**ADD**
–DE	Dielectric Supply Connection	POA

Product Number	Dimensions in inches [mm]						Approximate Weight lb [kg]
	4" [102] No-Hub Trap			4" [102] Hub & Spigot 1/2 'S' Trap			
	A	B	C	A	B	C	
Z1290	10-1/2 [267]	9-1/2 [241]	18-1/4 [464]	14 [356]	8-3/4 [222]	17-1/2 [445]	130 [59]

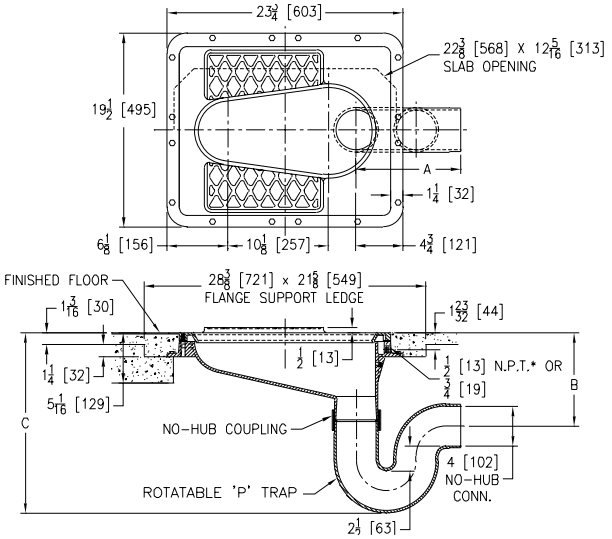

1	Zurn Z1290 "Eastern" Style Water Closet Porcelain Enameled Cast Iron
2	Membrane Flashing Clamp
3	Integral Non-Slip Foot Pads
4	Finished Floor
5	W.C. Top Flush with Finished Floor
6	Grout
7	Floor Membrane
8	Structural Floor Slab
9	Flush Pipe
10	No-Hub "P" Trap (Rotatable)
11	Dry Porcelain Enameled Bowl (two gallon complete flush)
12	Flushing Rim

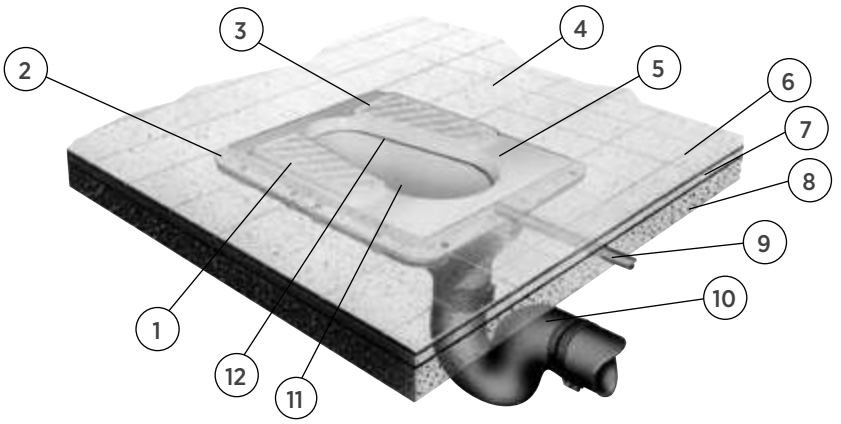

**Regularly furnished unless otherwise specified.*

For additional product information, please visit www.zurn.com

Items designated as Best Sellers are most specified and are generally in stock for shipment.

This symbol denotes a product that is engineered to reduce installation and rework time.

For Additional System Tools See "Z1200 Carrier Tools and Accessories" on page 210

HYDRANTS

HYDRANTS - APPLICATION INDEX	270
Z1300 ECOLOTROL WALL HYDRANT – ENCASED, NON-FREEZE, ANTI-SIPHON, AUTOMATIC DRAINING	271
Z1305 WALL HYDRANT – ENCASED, NON-FREEZE	271
Z1310 ECOLOTROL WALL HYDRANT – EXPOSED, NON-FREEZE, ANTI-SIPHON, AUTOMATIC DRAINING	272
Z1315 WALL HYDRANT – EXPOSED, NON-FREEZE	272
Z1320XL ECOLOTROL CERAMIC DISC WALL HYDRANT – ENCASED, NON-FREEZE, ANTI-SIPHON, AUTOMATIC DRAINING	273
⏲ **Z1320XL-EZ** ECOLOTROL CERAMIC DISC WALL HYDRANT – ENCASED, NON-FREEZE, ANTI-SIPHON, AUTOMATIC DRAINING	273
Z1321XL ECOLOTROL CERAMIC DISC WALL HYDRANT – EXPOSED, NON-FREEZE, ANTI-SIPHON, AUTOMATIC DRAINING	274
⏲ **Z1322XL-EZ** ECOLOTROL CERAMIC DISC WALL HYDRANT – EXPOSED, NON-FREEZE, ANTI-SIPHON, AUTOMATIC DRAINING	275
Z1325 WALL HYDRANT – ENCASED, VARI-TEMP, NON-FREEZE	276
⏲ **Z1327-EZ** NARROW WALL HOT/COLD HYDRANT WITH MOUNTING BRACKETS – ENCASED, MODERATE CLIMATE	276
Z1330XL ECOLOTROL CERAMIC DISC WALL HYDRANT – ENCASED, ANTI-SIPHON, AUTOMATIC DRAINING, MODERATE CLIMATE	277
⏲ **Z1332XL-EZ** ECOLOTROL CERAMIC DISC WALL HYDRANT – ENCASED, ANTI-SIPHON, AUTOMATIC DRAINING, MODERATE CLIMATE	277
Z1333XL ECOLOTROL CERAMIC DISC WALL HYDRANT – EXPOSED, ANTI-SIPHON, AUTOMATIC DRAINING, MODERATE CLIMATE	278
Z1335 WALL HYDRANT – ENCASED, MODERATE CLIMATE	278
Z1350 NARROW WALL HYDRANT – ENCASED, MODERATE CLIMATE	279
⏲ **Z1350-EZ** NARROW WALL HYDRANT WITH MOUNTING BRACKETS – ENCASED, MODERATE CLIMATE	279
Z1360XL GROUND HYDRANT – ENCASED, FLUSH TYPE, NON-FREEZE	280
Z1365 GROUND HYDRANT – ENCASED, FLUSH TYPE, NON-FREEZE	281
Z1370 GROUND HYDRANT – ENCASED, HOSE STORAGE, NON-FREEZE	282
Z1375 GROUND HYDRANT – ENCASED, MODERATE CLIMATE, INTERIOR USE	283
Z1385 POST HYDRANT – EXPOSED HEAD, NON-FREEZE	283
Z1388XL ROOF HYDRANT – EXPOSED HEAD, NON-FREEZE	284
Z1390 POST HYDRANT – EXPOSED HEAD, NON-FREEZE	284
Z1395XL YARD HYDRANT – EXPOSED HEAD, NON-FREEZE	285
Z1397XL FLO-TROL YARD HYDRANT – EXPOSED HEAD, NON-FREEZE	286

HYDRANTS - APPLICATION INDEX

WALL HYDRANTS	NON-FREEZE/SELF-DRAINING	MODERATE CLIMATE
Retail Outlets	Z1300, Z1305, Z1310, Z1320	Z1330, Z1335
Office Buildings	Z1300, Z1305, Z1320	Z1330, Z1335
Institutions, Hospitals, Schools	Z1300, Z1305, Z1320	Z1330, Z1335
Apartments	Z1315, Z1321	Z1333, Z1350, Z1350-EZ
Cored Wall Construction	Z1322-EZ	Z1332-EZ
Cleaning Areas, Slop Sink, Garbage Can Wash	Z1325	
Commercial/Multi-Family, Thin Wall Construction		Z1350, Z1350-EZ
Masonry Wall Construction	Z1320-EZ	
Vari-Temp (Hot/Cold)	Z1325	Z1327-EZ

GROUND HYDRANTS	NON-FREEZE/SELF-DRAINING	MODERATE CLIMATE
Parks, Recreational Areas	Z1360, Z1365, Z1370, Z1390, Z1395, Z1397	
Garden Areas	Z1360, Z1370, Z1385, Z1395, Z1397	Z1375
Industrial	Z1365, Z1370, Z1390	
Supermarkets, Malls	Z1360-HD	Z1375-HD
Farms, Agricultural	Z1385, Z1390, Z1395, Z1397	
Stables	Z1385, Z1390, Z1395, Z1397	

Note: Any of the non-freeze/self-draining hydrants may be used in moderate climates.

XL LEAD FREE

†Zurn "XL" Lead-Free compliant products are a line of durable plumbing products designed and manufactured to comply with state laws and local codes that mandate maximum allowable lead content levels. Zurn "XL" products are manufactured in accordance to the Federal SWDA section 1417.

†Lead-free product. For more information, see page 270.
**Regularly furnished unless otherwise specified.*

Items designated as Best Sellers are most specified and are generally in stock for shipment.
This symbol denotes a product that is engineered to reduce installation and rework time.
For additional product information, please visit www.zurn.com

Z1300 ECOLOTROL WALL HYDRANT – ENCASED, NON-FREEZE, ANTI-SIPHON, AUTOMATIC DRAINING

ENGINEERING SPECIFICATION

Zurn Z1300 encased Ecolotrol anti-siphon automatic draining wall hydrant is designed for flush installation. Comes complete with non-freeze type integral backflow preventer, bronze casing, all bronze interior parts, non-turning operating rod with free-floating compression closure valve, replaceable bronze seat and seat washer, and combination 3/4" female or 1" male straight IP inlet. Nickel bronze box and hinged cover include operating key lock and "WATER" cast on cover.

Wall Thickness inches [mm]	Approximate Weight lb [kg]
6 [152], 8 [203]	9 [4]
10 [254], 12 [305], 14 [356]	12 [5]
16 [406], 18 [457]	15 [7]
20 [508], 22 [559], 24 [610]	18 [8]

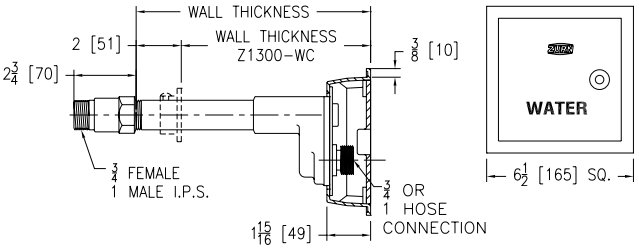

PRODUCT	DESCRIPTION	WALL THICKNESS	LIST PRICE
Z1300*	3/4" Hose Connection Nickel Bronze Box and Cover with Polished Face and Bronze Casing	6", 8"	2,770.00
		10", 12", 14"	2,851.00
		16", 18"	2,989.00
		20", 22", 24"	3,094.00
	1" Hose Connection Nickel Bronze Box and Cover with Polished Face and Bronze Casing	6" , 8"	2,979.00
		10", 12", 14"	3,062.00
		16", 18"	3,199.00
		20", 22", 24"	3,305.00
SUFFIXES			**ADD**
–CL	Cylinder Lock		190.00
–RA4	24" Replacement Rod Assembly Kit		576.00
–RK	Hydrant Parts Repair Kit		333.00
–SS	Stainless Steel Box and Cover		N/C
–WC	Wall Clamp		N/C
–34FS	3/4" Solder Female Inlet Adapter		N/C
–34UN	3/4" IP 90° Inlet Elbow with Union Nut		47.00
SUFFIXES			**DEDUCT**
–PB	Polished Bronze Face		173.00
BEST SELLERS			**LIST PRICE**
Z1300-3/4X6			2,770.00
Z1300-3/4X6-SS			2,770.00
Z1300-3/4X6-WC			2,770.00
Z1300-3/4X8			2,770.00
Z1300-3/4X10			2,851.00
Z1300-3/4X12			2,851.00
Z1300-3/4X14			2,851.00
Z1300-3/4X16			2,989.00
Z1300-3/4X18			2,989.00

Z1305 WALL HYDRANT – ENCASED, NON-FREEZE

ENGINEERING SPECIFICATION

Zurn Z1305 encased, non-freeze, flush wall hydrant features bronze casing, all bronze interior parts, non-turning operating rod with free-floating compression closure valve, replaceable bronze seat and seat washer, and combination 3/4" female or 1" male straight IP inlet. Nickel bronze box and hinged cover include operating key lock and "WATER" cast on cover.

Wall Thickness inches [mm]	Approximate Weight lb [kg]
6 [152], 8 [203]	11 [5]
10 [254], 12 [305], 14 [356]	13 [6]
16 [406]	15 [7]
24 [610]	17 [8]

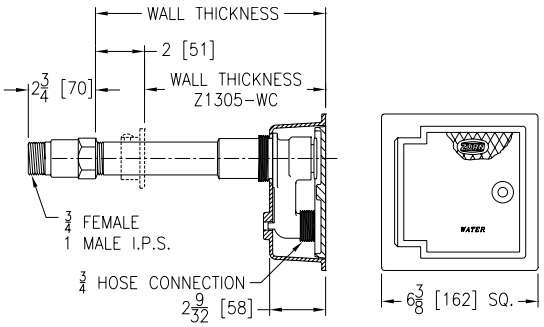

PRODUCT	DESCRIPTION	WALL THICKNESS	LIST PRICE
Z1305*	3/4" Hose Connection Nickel Bronze Box and Cover with Polished Face and Bronze Casing	6", 8"	1,885.00
		10", 12", 14"	1,976.00
		16"	2,117.00
		24"	2,214.00
SUFFIXES			**ADD**
–RA4	24" Replacement Rod Assembly Kit		576.00
–RK	Hydrant Parts Repair Kit		333.00
–WC	Wall Clamp		N/C
–34UN	3/4" IP 90° Inlet Elbow with Union Nut		47.00
SUFFIXES			**DEDUCT**
–PB	Polished Bronze Face		213.00
BEST SELLERS			**LIST PRICE**
Z1305-3/4X6			1,885.00
Z1305-3/4X8			1,885.00
Z1305-3/4X12			1,976.00
Z1305-3/4X16			2,117.00

Items designated as Best Sellers are most specified and are generally in stock for shipment.
This symbol denotes a product that is engineered to reduce installation and rework time.
For additional product information, please visit www.zurn.com

†Lead-free product. For more information, see page 270.
**Regularly furnished unless otherwise specified.*

Z1310 ECOLOTROL WALL HYDRANT – EXPOSED, NON-FREEZE, ANTI-SIPHON, AUTOMATIC DRAINING

ENGINEERING SPECIFICATION

Zurn Z1310 exposed Ecolotrol anti-siphon automatic draining wall hydrant features non-freeze integral backflow preventer, bronze casing, all bronze interior parts, non-turning operating rod with free-floating compression closure valve, replaceable bronze seat and seat washer, and combination 3/4″ female or 1″ male straight IP inlet. Includes stainless steel face with operating key.

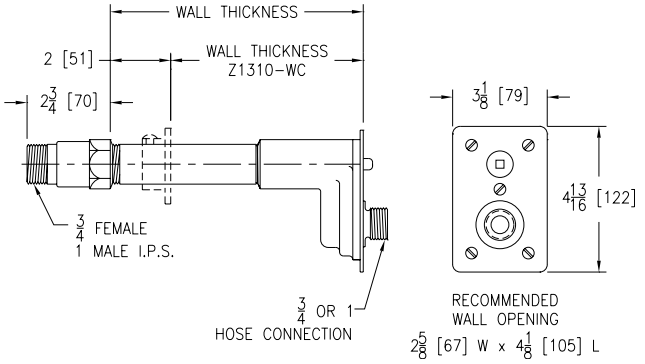

Wall Thickness inches [mm]	Approximate Weight lb [kg]
4 [102], 6 [152], 8 [203]	5 [2]
10 [254], 12 [305], 14 [356]	8 [4]
16 [406], 18 [457]	11 [5]
20 [508], 22 [559], 24 [610]	14 [6]

PRODUCT	DESCRIPTION	WALL THICKNESS	LIST PRICE
Z1310*	3/4″ Hose Connection Bronze Hydrant with Polished Stainless Steel Face and Bronze Casing	4″, 6″, 8″	1,381.00
		10″, 12″, 14″	1,476.00
		16″, 18″	1,610.00
		20″, 22″, 24″	1,718.00
	1″ Hose Connection Bronze Hydrant with Polished Stainless Steel Face and Bronze Casing	4″, 6″ , 8″	1,593.00
		10″, 12″, 14″	1,687.00
		16″, 18″	1,824.00
		20″, 22″, 24″	1,929.00
SUFFIXES			**ADD**
–RA4	24″ Replacement Rod Assembly Kit		576.00
–RK	Hydrant Parts Repair Kit		333.00
–WC	Wall Clamp		N/C
–34FS	3/4″ Solder Female Inlet Adapter		N/C
–34UN	3/4″ IP 90° Inlet Elbow with Union Nut		47.00
SUFFIXES			**DEDUCT**
–PB	Polished Bronze Face		61.00
BEST SELLERS			**LIST PRICE**
Z1310-3/4X4			1,381.00
Z1310-3/4X6			1,381.00
Z1310-3/4X8			1,381.00
Z1310-3/4X10			1,476.00
Z1310-3/4X12			1,476.00

Z1315 WALL HYDRANT – EXPOSED, NON-FREEZE

ENGINEERING SPECIFICATION

Zurn Z1315 exposed, non-freeze wall hydrant features bronze casing, all bronze interior parts, non-turning operating rod with free-floating compression closure valve, replaceable bronze seat and seat washer, and combination 3/4″ female or 1″ male straight IP inlet. Comes complete with operating key.

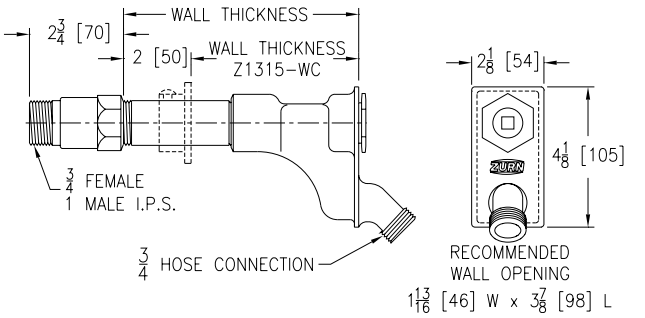

Wall Thickness inches [mm]	Approximate Weight lb [kg]
4 [102], 6 [152], 8 [203]	6 [3]
10 [254], 12 [305]	8 [4]
16 [406], 18 [457]	10 [5]

PRODUCT	DESCRIPTION	WALL THICKNESS	LIST PRICE
Z1315*	3/4″ Hose Connection Nickel Bronze Box and Cover with Polished Face and Bronze Casing	4″, 6″, 8″	1,093.00
		10″, 12″	1,183.00
		16″, 18″	1,319.00
SUFFIXES			**ADD**
–RA4	24″ Replacement Rod Assembly Kit		576.00
–RK	Hydrant Parts Repair Kit		333.00
–VB	3/4″ Adapter Vacuum Breaker		139.00
–WC	Wall Clamp		N/C
SUFFIXES			**DEDUCT**
–PB	Polished Bronze Face		61.00
BEST SELLERS			**LIST PRICE**
Z1315-3/4X4			1,093.00
Z1315-3/4X12			1,183.00

†Lead-free product. For more information, see page 270.
**Regularly furnished unless otherwise specified.*

Items designated as Best Sellers are most specified and are generally in stock for shipment.
This symbol denotes a product that is engineered to reduce installation and rework time.
For additional product information, please visit www.zurn.com

Z1320XL ECOLOTROL CERAMIC DISC WALL HYDRANT – ENCASED, NON-FREEZE, ANTI-SIPHON, AUTOMATIC DRAINING

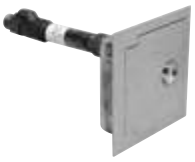

XL LEAD FREE

ENGINEERING SPECIFICATION

Zurn Z1320XL encased, Ecolotrol, lead-free†, non-freeze automatic draining wall hydrant is designed for flush installation. Features integral backflow preventer, anti-siphon technology, copper casing, all bronze interior components with 1/2 turn long-life ceramic disc cartridge, combination 3/4″ female solder and 3/4″ male pipe thread inlet connection, and 3/4″ male hose connection. Comes complete with Type 304 stainless steel housing and hinged cover that includes operating key lock and "WATER" cast on cover.

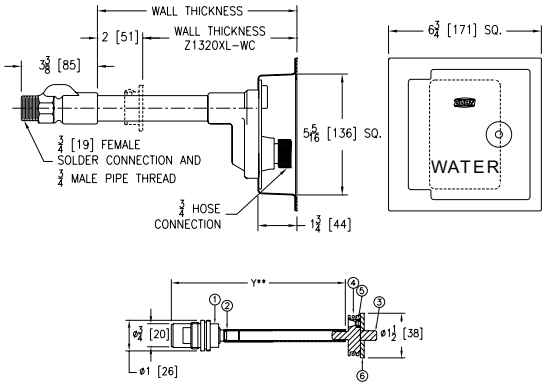

Wall Thickness inches [mm]	Approximate Weight lb [kg]
6 [152], 8 [203]	5 [2]
10 [254], 12 [305], 14 [356]	6 [3]
16 [406], 18 [457]	7 [3]
20 [508], 22 [559], 24 [610]	8 [4]
26 [660], 30 [762]	10 [5]

PRODUCT	DESCRIPTION	WALL THICKNESS	LIST PRICE
Z1320XL*	3/4″ Hose Connection Stainless Steel Box and Face with Copper Casing	6″, 8″	1,567.00
		10″, 12″, 14″	1,622.00
		16″, 18″	1,711.00
		20″, 22″, 24″	1,795.00
		26″, 30″	1,998.00

SUFFIXES		ADD
–CL	Cylinder Lock	178.00
–NB	Polished Nickel Bronze Face	N/C
–PB	Polished Bronze Face	63.00
–RK	Hydrant Parts Repair Kit (HYD-RK-Z1321XL/33XL)	337.00
–RT12	Ceramic Cartridge Removal Tool (Up to 12″)	50.00
–RT24	Ceramic Cartridge Removal Tool (Up to 24″)	50.00
–RT36	Ceramic Cartridge Removal Tool (Up to 36″)	50.00
–WC	Wall Clamp	N/C
–34EL	3/4″ 90° Solder Inlet Elbow	N/C
–34FIP	3/4″ IP Straight Female Inlet Adapter	44.00

BEST SELLERS	LIST PRICE
Z1320-3/4X6	1,567.00
Z1320-3/4X8	1,567.00
Z1320-3/4X10	1,622.00
Z1320-3/4X12	1,622.00

Z1320XL-EZ ECOLOTROL CERAMIC DISC WALL HYDRANT – ENCASED, NON-FREEZE, ANTI-SIPHON, AUTOMATIC DRAINING

XL LEAD FREE

ENGINEERING SPECIFICATION

Zurn Z1320XL-EZ encased, Ecolotrol, lead-free†, non-freeze automatic draining wall hydrant is designed for flush installation. Features integral backflow preventer, anti-siphon technology, copper casing, all bronze interior components with 1/2 turn long-life ceramic disc cartridge, combination 3/4″ female solder and 3/4″ male pipe thread inlet connection, and 3/4″ male hose connection. Comes complete with Type 304 stainless steel housing and hinged cover that includes operating key lock and "WATER" cast on cover. Hydrant housing fits within one standard modular masonry course. Recommended wall opening: 3-3/16″ X 8-1/2″.

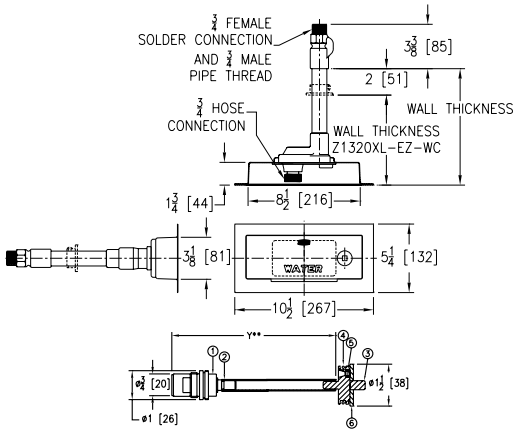

Wall Thickness inches [mm]	Approximate Weight lb [kg]
6 [152], 8 [203]	5 [2]
10 [254], 12 [305], 14 [356]	6 [3]
16 [406], 18 [457]	7 [3]
20 [508], 22 [559], 24 [610]	8 [4]
26 [660], 30 [762]	10 [5]

PRODUCT	DESCRIPTION	WALL THICKNESS	LIST PRICE
Z1320XL-EZ*	3/4″ Hose Connection Stainless Steel Box and Face with Copper Casing	6″, 8″	1,550.00
		10″, 12″, 14″	1,605.00
		16″, 18″	1,693.00
		20″, 22″, 24″	1,777.00
		26″, 30″	1,980.00

SUFFIXES		ADD
–CL	Cylinder Lock	178.00
–RK	Hydrant Parts Repair Kit (HYD-RK-Z1321XL/33XL)	337.00
–RT12	Ceramic Cartridge Removal Tool (Up to 12″)	50.00
–RT24	Ceramic Cartridge Removal Tool (Up to 24″)	50.00
–RT36	Ceramic Cartridge Removal Tool (Up to 36″)	50.00
–WC	Wall Clamp	N/C
–34EL	3/4″ IP 90° Solder Inlet Elbow	N/C
–34FIP	3/4″ IP Straight Female Inlet Adapter	44.00

BEST SELLERS	LIST PRICE
Z1320XL-EZ-3/4x6	1,550.00
Z1320XL-EZ-3/4x10	1,605.00
Z1320XL-EZ-3/4x12	1,605.00

Items designated as Best Sellers are most specified and are generally in stock for shipment.
This symbol denotes a product that is engineered to reduce installation and rework time.
For additional product information, please visit www.zurn.com

†Lead-free product. For more information, see page 270.
**Regularly furnished unless otherwise specified.*

Z1321XL ECOLOTROL CERAMIC DISC WALL HYDRANT – EXPOSED, NON-FREEZE, ANTI-SIPHON, AUTOMATIC DRAINING

XL LEAD FREE

ENGINEERING SPECIFICATION

Zurn Z1321XL exposed, Ecolotrol, lead-free†, non-freeze automatic draining wall hydrant is designed for flush installation. Features integral backflow preventer, anti-siphon technology, copper casing, all bronze interior components with 1/2 turn long-life ceramic disc cartridge, combination 3/4″ female solder and 3/4″ male pipe thread inlet connection, and 3/4″ male hose connection. Furnished with Type 304 stainless steel faceplate and includes operating key.

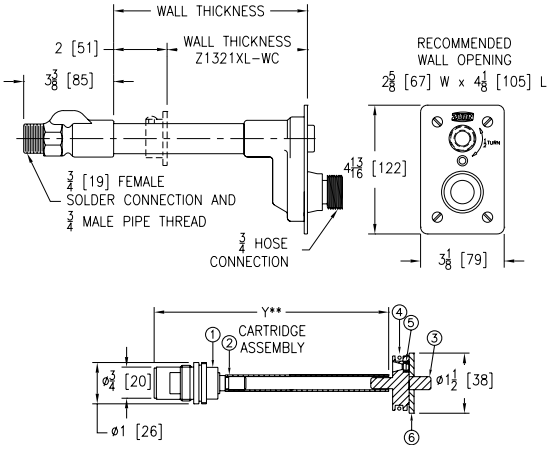

Wall Thickness inches [mm]	Approximate Weight lb [kg]
6 [152], 8 [203]	3 [1]
10 [254], 12 [305], 14 [356]	4 [2]
16 [406], 18 [457]	5 [2]
20 [508], 22 [559], 24 [610]	6 [3]
26 [660], 30 [762]	8 [4]

PRODUCT	DESCRIPTION	WALL THICKNESS	LIST PRICE
Z1321XL*	3/4″ Hose Connection Stainless Steel Box and Face with Copper Casing	6″, 8″	880.00
		10″, 12″, 14″	934.00
		16″, 18″	1,023.00
		20″, 22″, 24″	1,107.00
		26″, 30″	1,311.00
SUFFIXES			**ADD**
–PB	Polished Bronze Face		63.00
–RK	Hydrant Parts Repair Kit (HYD-RK-Z1321XL/33XL)		337.00
–RT12	Ceramic Cartridge Removal Tool (Up to 12″Wall)		50.00
–RT24	Ceramic Cartridge Removal Tool (Up to 24″ Wall)		50.00
–RT36	Ceramic Cartridge Removal Tool (Up to 36″ Wall)		50.00
–WC	Wall Clamp		N/C
–34EL	3/4″ IP 90° Solder Inlet Elbow		N/C
–34FIP	3/4″ IP StraightFemale Inlet Adapter		44.00
BEST SELLERS			**LIST PRICE**
Z1321XL-3/4x6			880.00
Z1321XL-3/4x8			880.00
Z1321XL-3/4x10			934.00
Z1321XL-3/4x12			934.00

SEE LEGACY ADDENDUM ON PAGE 369 FOR MORE INFORMATION

†Lead-free product. For more information, see page 270.
**Regularly furnished unless otherwise specified.*

Items designated as Best Sellers are most specified and are generally in stock for shipment.
This symbol denotes a product that is engineered to reduce installation and rework time.
For additional product information, please visit www.zurn.com

Z1322XL-EZ ECOLOTROL CERAMIC DISC WALL HYDRANT – EXPOSED, NON-FREEZE, ANTI-SIPHON, AUTOMATIC DRAINING

PATENTED

XL LEAD FREE

ENGINEERING SPECIFICATION

Zurn Z1322XL-EZ encased, Ecolotrol, lead-free†, non-freeze automatic draining wall hydrant is designed for flush installation in 6″ diameter cored hole concrete exterior wall. Features integral backflow preventer, anti-siphon technology, copper casing, all bronze interior components with 1/2 turn long-life ceramic disc cartridge, combination 3/4″ female solder and 3/4″ male pipe thread inlet connection, and 3/4″ male hose connection. Includes Type 304 stainless steel housing with large flange and hinged cover that includes operating key lock and "WATER" cast on cover.

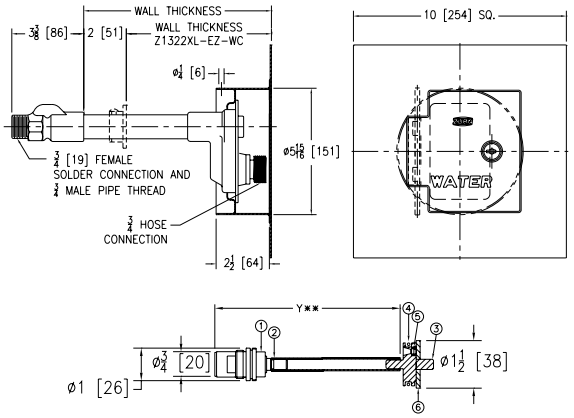

Wall Thickness inches [mm]	Approximate Weight lb [kg]
6 [152], 8 [203]	5 [2]
10 [254], 12 [305], 14 [356]	6 [3]
16 [406], 18 [457]	7 [3]
20 [508], 22 [559], 24 [610]	8 [4]
26 [660], 30 [762]	10 [5]

PRODUCT	DESCRIPTION	WALL THICKNESS	LIST PRICE
Z1322XL-EZ*	3/4″ Hose Connection Stainless Steel Box and Face with Copper Casing	6″, 8″	1,955.00
		10″, 12″, 14″	2,010.00
		16″, 18″	2,098.00
		20″, 22″, 24″	2,183.00
		26″, 30″	2,385.00

SUFFIXES		ADD
–CL	Cylinder Lock	178.00
–RK	Hydrant Parts Repair Kit (HYD-RK-Z1321XL/33XL)	337.00
–RT12	Ceramic Cartridge Removal Tool (Up to 12″ Wall)	50.00
–RT24	Ceramic Cartridge Removal Tool (Up to 24″ Wall)	50.00
–RT36	Ceramic Cartridge Removal Tool (Up to 36″ Wall)	50.00
–8	8″ Diameter Cored Hole	N/C
–34EL	3/4″ IP 90° Solder Inlet Elbow	N/C
–34FIP	3/4″ IP Straight Female Inlet Adapter	44.00

BEST SELLERS	LIST PRICE
Z1322XL-EZ-3/4x6	1,955.00
Z1322XL-EZ-3/4x8	1,955.00
Z1322XL-EZ-3/4x10	2,010.00

Items designated as Best Sellers are most specified and are generally in stock for shipment.
This symbol denotes a product that is engineered to reduce installation and rework time.
For additional product information, please visit www.zurn.com

†Lead-free product. For more information, see page 270.
**Regularly furnished unless otherwise specified.*

Z1325 WALL HYDRANT – ENCASED, VARI-TEMP, NON-FREEZE

ENGINEERING SPECIFICATION

Zurn Z1325 Vari-Temp combination hot and cold water, non-freeze, encased wall hydrant is designed for flush installation. Comes complete with bronze casing, all bronze interior components, non-turning operating rods with free-floating compression closure valves, replaceable bronze seat and seat washer, and combination 3/4″ female or 1″ male straight IP inlet. Includes nickel bronze box and hinged cover with operating key lock and "WATER" cast on cover.

NOTES

When -VB vacuum breaker suffix is specified, the vacuum breaker must be manually tripped at the end of usage to facilitate drainage of the hydrant and maintain the non-freeze feature.

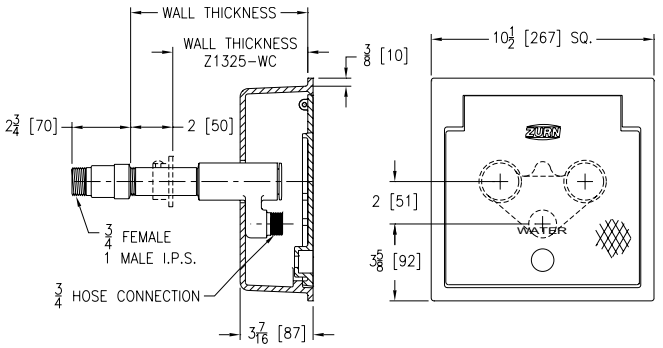

Wall Thickness inches [mm]	Approximate Weight lb [kg]
6 [152], 8 [203]	27 [12]
10 [254], 12 [305], 14 [356]	31 [14]
16 [406], 18 [457]	35 [16]
24 [610]	39 [18]

PRODUCT	DESCRIPTION	WALL THICKNESS	LIST PRICE
Z1325*	3/4″ Hose Connection Nickel Bronze Box and Cover with Polished Face and Bronze Casing	6″, 8″	3,808.00
		10″, 12″, 14″	3,912.00
		16″, 18″	4,251.00
		24″	4,463.00
SUFFIXES			**ADD**
–CL	Cylinder Lock		190.00
–NW	Narrow Wall (Priced same as 6–8″ Wall)		–
–RA4	24″ Replacement Rod Assembly Kit		1,146.00
–RK	Hydrant Parts Repair Kit		569.00
–VB	3/4″ Adapter Vacuum Breaker		139.00
–WC	Wall Clamp		N/C
–34UN	3/4″ IP 90° Inlet Elbow with Union Nut		95.00
SUFFIXES			**DEDUCT**
–PB	Polished Bronze Face		279.00
BEST SELLERS			**LIST PRICE**
Z1325-3/4X6			3,808.00
Z1325-3/4X6-VB			3,947.00
Z1325-3/4X8			3,808.00

Z1327-EZ NARROW WALL HOT/COLD HYDRANT WITH MOUNTING BRACKETS – ENCASED, MODERATE CLIMATE

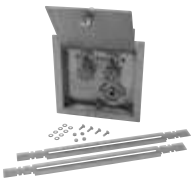

PATENTED

ENGINEERING SPECIFICATION

Zurn Z1327-EZ encased, moderate climate hot/cold wall hydrant is designed for narrow wall installation. Features bronze body, all brass interior parts, replaceable seat washers, screwdriver operated stop valves in supply, handle operated control valves, 3/4″ IP female inlets, and 3/4″ male hose connection standard. Includes stainless steel box and removable hinged cover with cylinder lock and "WATER" cast on cover. Comes complete with mounting brackets, hardware for installation and horizontal adjustment inside a 16″ on center stud wall.

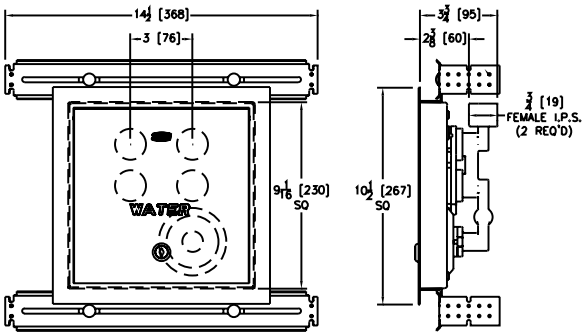

Wall Thickness inches [mm]	Approximate Weight lb [kg]
3-1/2 [89]	11 [5]

PRODUCT	DESCRIPTION	WALL THICKNESS	LIST PRICE
Z1327-EZ*	3/4″ Hose Connection Stainless Steel Face with Bronze Body	3-1/2″	3,236.00
SUFFIXES			**ADD**
–RK	Hydrant Parts Repair Kit		569.00
–VB	3/4″ Adapter Vacuum Breaker		139.00
–24	Mounting Brackets (for 24″ on Center Stud Wall)		N/C
BEST SELLERS			**LIST PRICE**
Z1327-3/4-EZ			3,236.00
Z1327-3/4-EZ-VB			3,375.00

†Lead-free product. For more information, see page 270.
*Regularly furnished unless otherwise specified.

Items designated as Best Sellers are most specified and are generally in stock for shipment.
This symbol denotes a product that is engineered to reduce installation and rework time.
For additional product information, please visit www.zurn.com

Z1330XL ECOLOTROL CERAMIC DISC WALL HYDRANT – ENCASED, ANTI-SIPHON, AUTOMATIC DRAINING, MODERATE CLIMATE

XL LEAD FREE

ENGINEERING SPECIFICATION

Zurn Z1330XL encased, Ecolotrol, lead-free†, anti-siphon, moderate climate, interior wall hydrant is designed for flush installation. Features integral backflow preventer, anti-siphon technology, all bronze interior components with 1/2 turn long-life ceramic disc cartridge, combination 3/4″ female solder and 3/4″ male pipe thread inlet connection, and 3/4″ male hose connection. Includes Type 304 stainless steel, flanged housing with locking, hinged cover stamped "WATER", and operating key.

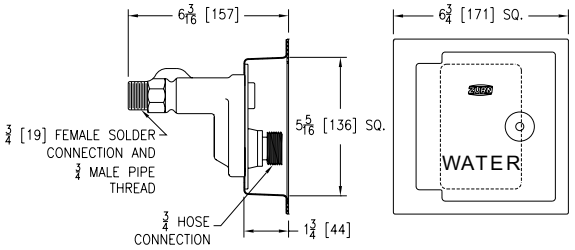

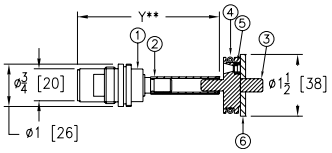

Wall Thickness inches [mm]	Approximate Weight lb [kg]
8 [203]	4 [2]

PRODUCT	DESCRIPTION	WALL THICKNESS	LIST PRICE
Z1330XL*	3/4″ Hose Connection Stainless Steel Box and Cover with Polished Face	8″	1,421.00
SUFFIXES			**ADD**
–CL	Cylinder Lock		178.00
–NB	Polished Nickel Bronze Face		N/C
–PB	Polished Bronze Face		63.00
–RK	Hydrant Parts Repair Kit (HYD-RK-Z1321XL/33XL)		337.00
–RT12	Ceramic Cartridge Removal Tool (Up to 12″ Wall)		50.00
–34EL	3/4″ 90° Solder Inlet Elbow		N/C
BEST SELLERS			**LIST PRICE**
Z1330XL-3/4			1,421.00
Z1330XL-3/4-NB			1,421.00
Z1330XL-3/4-PB			1,484.00

Z1332XL-EZ ECOLOTROL CERAMIC DISC WALL HYDRANT – ENCASED, ANTI-SIPHON, AUTOMATIC DRAINING, MODERATE CLIMATE

XL LEAD FREE

PATENTED

ENGINEERING SPECIFICATION

Zurn Z1322XL-EZ encased, Ecolotrol, lead-free†, non-freeze automatic draining wall hydrant is designed for flush installation in 6″ diameter cored hole concrete exterior wall. Features integral backflow preventer, anti-siphon technology, copper casing, all bronze interior components with 1/2 turn long-life ceramic disc cartridge, combination 3/4″ female solder and 3/4″ male pipe thread inlet connection, and 3/4″ male hose connection. Includes Type 304 stainless steel housing with large flange and hinged cover that includes operating key lock and "WATER" cast on cover.

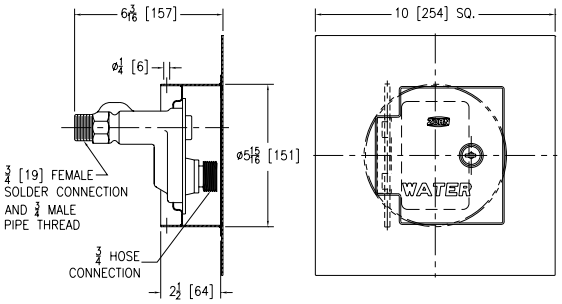

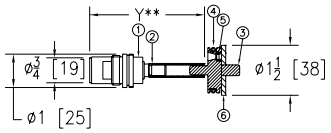

Wall Thickness inches [mm]	Approximate Weight lb [kg]
8 [203]	4 [2]

PRODUCT	DESCRIPTION	WALL THICKNESS	LIST PRICE
Z1332XL-EZ*	3/4″ Hose Connection Stainless Steel Box and Cover with Polished Face	8″	1,801.00
SUFFIXES			**ADD**
–CL	Cylinder Lock		178.00
–RK	Hydrant Parts Repair Kit (HYD-RK-Z1321XL/33XL)		337.00
–RT12	Ceramic Cartridge Removal Tool (Up to 12″ Wall)		50.00
–8	8″ Diameter Cored Hole		N/C
BEST SELLER			**LIST PRICE**
Z1332XL-EZ-3/4			1,801.00

Items designated as Best Sellers are most specified and are generally in stock for shipment.
This symbol denotes a product that is engineered to reduce installation and rework time.
For additional product information, please visit www.zurn.com

†Lead-free product. For more information, see page 270.
**Regularly furnished unless otherwise specified.*

Z1333XL ECOLOTROL CERAMIC DISC WALL HYDRANT – EXPOSED, ANTI-SIPHON, AUTOMATIC DRAINING, MODERATE CLIMATE

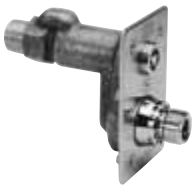

XL LEAD FREE

ENGINEERING SPECIFICATION

Zurn Z1333XL exposed, Ecolotrol, lead-free†, anti-siphon, moderate climate, interior wall hydrant is designed for flush installation. Features integral backflow preventer, anti-siphon technology, all bronze interior components with 1/2 turn long-life ceramic disc cartridge, combination 3/4″ female solder and 3/4″ male pipe thread inlet connection, and 3/4″ male hose connection. Includes Type 304 stainless steel faceplate and operating key.

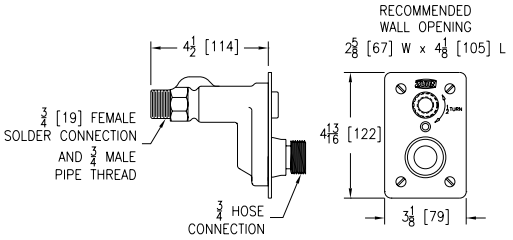

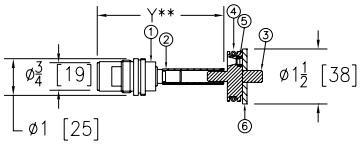

Wall Thickness inches [mm]	Approximate Weight lb [kg]
6 [152]	3 [1]

PRODUCT	DESCRIPTION	WALL THICKNESS	LIST PRICE
Z1333XL*	3/4″ Hose Connection Stainless Steel Face	6″	**680.00**
SUFFIXES			**ADD**
–PB	Polished Bronze Face		**63.00**
–RK	Hydrant Parts Repair Kit (HYD-RK-Z1321XL/33XL)		**337.00**
–RT12	Ceramic Cartridge Removal Tool (Up to 12″ Wall)		**50.00**
BEST SELLER			**LIST PRICE**
Z1333XL-3/4			**680.00**

Z1335 WALL HYDRANT – ENCASED, MODERATE CLIMATE

ENGINEERING SPECIFICATION

Zurn Z1335 encased flush wall hydrant is designed for moderate climate and interior wall installation. Comes complete with all bronze interior parts, non-turning operating coupling, free-floating compression closure valve, replaceable bronze seat and seat washer, and 3/4″ female IP inlet. Includes nickel bronze box and hinged cover with operating key lock and "WATER" cast on cover.

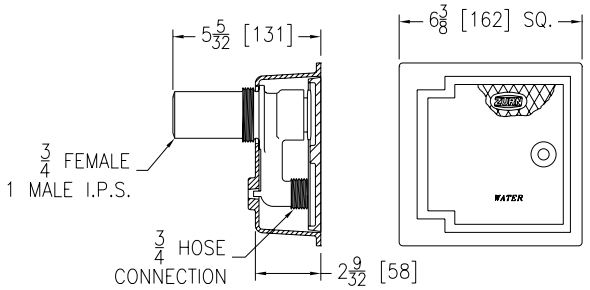

Wall Thickness inches [mm]	Approximate Weight lb [kg]
6 [152]	8 [4]

PRODUCT	DESCRIPTION	WALL THICKNESS	LIST PRICE
Z1335*	3/4″ Hose Connection Nickel Bronze Box and Cover with Polished Face	6″	**1,615.00**
SUFFIXES			**ADD**
–CL	Cylinder Lock		**190.00**
–RK	Hydrant Parts Repair Kit		**333.00**
–34FS	3/4″ Solder Female Inlet Adapter		**N/C**
–34UN	3/4″ IP 90° Inlet Elbow with Union Nut		**47.00**
SUFFIXES			**DEDUCT**
–CI	D.C.C.I. Box and Cover		**369.00**
–PB	Polished Bronze Face		**213.00**
BEST SELLER			**LIST PRICE**
Z1335-3/4			**1,615.00**

†Lead-free product. For more information, see page 270.
**Regularly furnished unless otherwise specified.*

Items designated as Best Sellers are most specified and are generally in stock for shipment.
This symbol denotes a product that is engineered to reduce installation and rework time.
For additional product information, please visit www.zurn.com

Z1350 NARROW WALL HYDRANT – ENCASED, MODERATE CLIMATE

PATENTED

ENGINEERING SPECIFICATION

Zurn Z1350 encased moderate climate wall hydrant is designed for narrow wall installation. Comes complete with bronze body, all bronze interior parts, replaceable seat washer, screwdriver operated stop valve in supply, key operated control valve, and 3/4" IP female inlet connection and 3/4" male hose connection standard. Includes adjustable stainless steel box furnished with hinged cover, cylinder lock, and "WATER" stamped on cover.

NOTES

The adjustable sleeve on the stainless steel box is provided with a gasket as standard, but additional caulking of all inside joints is required (by others) after the hydrant box has been properly set. Caulking should be performed on all open seams, including the seams where the gasket is present.

BEST SELLERS	LIST PRICE
Z1350-3/4	1,263.00
Z1350-3/4-34EL	1,263.00
Z1350-3/4-34FS-VB	1,402.00
Z1350-3/4-VB	1,402.00

Wall Thickness inches [mm]	Approximate Weight lb [kg]
4 [102]	4 [2]

PRODUCT	DESCRIPTION	WALL THICKNESS	LIST PRICE
Z1350*	3/4" Hose Connection Stainless Steel Box and Cover with Bronze Body	4"	1,263.00
SUFFIXES			**ADD**
–RK	Hydrant Parts Repair Kit		530.00
–VB	3/4" Adapter Vacuum Breaker		139.00
–34EL	3/4" IP 90° Inlet Elbow Adapter		N/C
–34FS	3/4" Solder Female Inlet Adapter		N/C

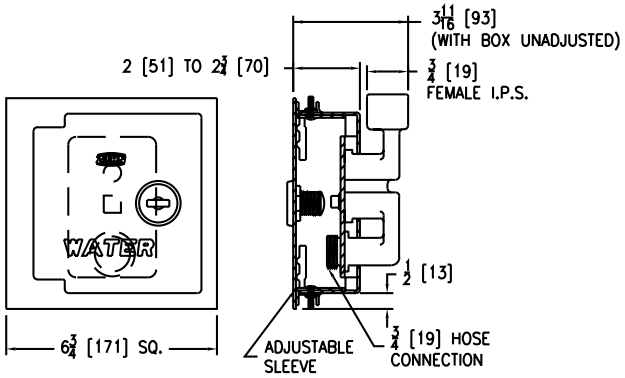

Z1350-EZ NARROW WALL HYDRANT WITH MOUNTING BRACKETS – ENCASED, MODERATE CLIMATE

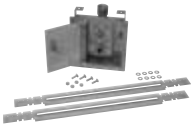

ENGINEERING SPECIFICATION

Zurn Z1350-EZ encased moderate climate wall hydrant is designed for narrow wall installation. Features bronze body, all bronze interior parts, replaceable seat washer, screwdriver operated stop valve in supply, key operated control valve, and 3/4" IP female inlet and 3/4" male hose connection standard. Includes stainless steel box and hinged cover with cylinder lock and "WATER" stamped on cover. Comes complete with mounting brackets and hardware for installation and horizontal adjustment inside a 16" on center stud wall.

NOTES

The adjustable sleeve on the stainless steel box is provided with a gasket as standard, but additional caulking of all inside joints is required (by others) after the hydrant box has been properly set. Caulking should be performed on all open seams, including the seams where the gasket is present.

BEST SELLERS	LIST PRICE
Z1350-3/4-EZ	1,429.00
Z1350-3/4-EZ-VB	1,568.00

Wall Thickness inches [mm]	Approximate Weight lb [kg]
4 [102]	6 [3]

PRODUCT	DESCRIPTION	WALL THICKNESS	LIST PRICE
Z1350-EZ*	3/4" Hose Connection Stainless Steel Box and Cover with Bronze Body	4"	1,429.00
SUFFIXES			**ADD**
–RK	Hydrant Parts Repair Kit		530.00
–VB	3/4" Adapter Vacuum Breaker		139.00
–24	Mounting Brackets (For 24" on Center Stud Wall)		N/C
–34EL	3/4" IP 90° Inlet Elbow Adapter		N/C
–34FS	3/4" Solder Female Inlet Adapter		N/C

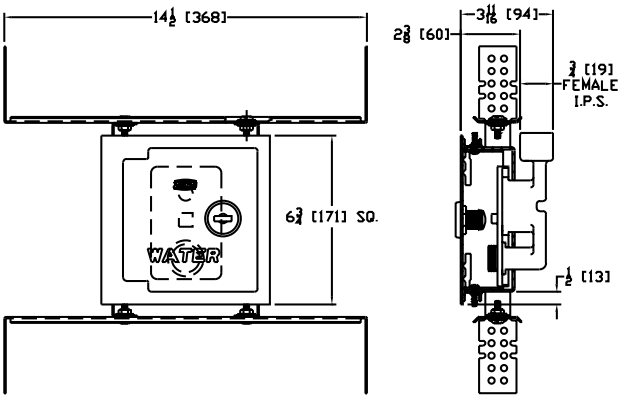

Items designated as Best Sellers are most specified and are generally in stock for shipment.
This symbol denotes a product that is engineered to reduce installation and rework time.
For additional product information, please visit www.zurn.com

†Lead-free product. For more information, see page 270.
**Regularly furnished unless otherwise specified.*

Z1360XL GROUND HYDRANT – ENCASED, FLUSH TYPE, NON-FREEZE

XL LEAD FREE

ENGINEERING SPECIFICATION

Zurn Z1360-XL encased, lead-free†, non-freeze ground hydrant is designed for flush with grade or finished (non-traffic) floor installation. Features galvanized steel casing, bronze and stainless steel interior components, bronze seat and replaceable seat washer, non-turning operating rod, and free-floating compression closure valve with 3/4″ or 1″ inlet connection with 1/4″ tapped drainage port on housing, and 3/4″ or 1″ male hose connection. Includes plain bronze box and locking, hinged, scoriated cover stamped "WATER" and operating key.

NOTES

‡Non-Freeze feature will not automatically function when (-VB suffix) vacuum breaker is specified. The vacuum breaker must be manually tripped to facilitate drainage of hydrant.

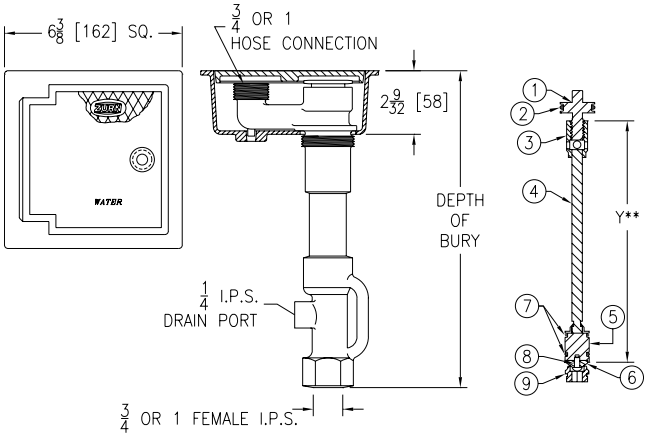

Depth of Bury feet [m]	Approximate Weight lb [kg]
2 [0.61]	17 [8]
3 [0.91]	21 [10]
4 [1.22]	25 [11]
5 [1.52]	33 [15]
6 [1.83]	39 [18]
7 [2.13]	43 [20]
8 [2.44]	47 [21]
9 [2.74]	52 [24]
10 [3.05]	56 [25]

PRODUCT	DESCRIPTION	DEPTH OF BURY FEET	LIST PRICE
Z1360XL*	3/4″ Hose Connection Bronze Box and Scoriated Cover with Galvanized Steel Casing	2′	2,103.00
		3′	2,255.00
		4′	2,417.00
		5′	2,589.00
		6′	2,747.00
		7′	2,904.00
		8′	3,064.00
		9′	3,234.00
		10′	3,386.00
	1″ Hose Connection Bronze Box and Scoriated Cover with Galvanized Steel Casing	2′	2,434.00
		3′	2,585.00
		4′	2,745.00
		5′	2,920.00
		6′	3,074.00
		7′	3,233.00
		8′	3,393.00
		9′	3,566.00
		10′	3,714.00

SUFFIXES		ADD
–BC	Bronze Casing	357.00
–DP12	1/2″ IP Drain Port in Box	178.00
–DP14	1/4″ IP Drain Port in Box	178.00
–DP38	3/8″ IP Drain Port in Box	178.00
–HD-8	Heavy–Duty Ductile Iron Cover with Cast Iron Box	377.00
–HD-10	Heavy-Duty Stainless Steel Cover with Nickel Box	801.00
–K	Flashing Flange Only	789.00
–KC	Flashing Flange with Clamp Collar	858.00
–NB	Polished Nickel Bronze Face	263.00
–PB	Polished Bronze Face	59.00
–RK	Hydrant Parts Repair Kit (HYD-RK-Z1360XL)	337.00
–VB	3/4″ Adapter Vacuum Breaker‡ (Requires deeper box to accommodate vacuum breaker)	141.00

SUFFIXES		DEDUCT
–CI	D.C.C.I. Box and Cover	349.00

BEST SELLERS	LIST PRICE
Z1360-3/4X2	2,103.00
Z1360-3/4X2-NB	2,366.00
Z1360-3/4X3	2,255.00
Z1360-3/4X4	2,417.00

†Lead-free product. For more information, see page 270.
**Regularly furnished unless otherwise specified.*

Items designated as Best Sellers are most specified and are generally in stock for shipment.
This symbol denotes a product that is engineered to reduce installation and rework time.
For additional product information, please visit www.zurn.com

Z1365 GROUND HYDRANT – ENCASED, FLUSH TYPE, NON-FREEZE

ENGINEERING SPECIFICATION

Zurn Z1365 encased, non-freeze ground hydrant is designed for flush with grade or finished floor installation. Features galvanized steel casing, all bronze interior parts, bronze seat and replaceable seat washer, and non-turning operating rod with free-floating compression closure valve with 1-1/4", 1-1/2", or 2" connection. Includes Dura-Coated cast iron box and hinged scoriated cover with operating "T" handle key lock and "WATER" cast on cover. Hydrant is equipped with a tapped 1/4" NPT drain port in valve housing.

NOTES

Important: Hydrant must be opened one turn minimum to seal drain port during use.

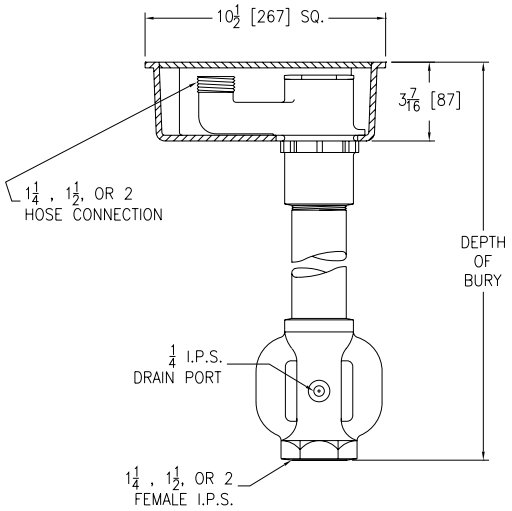

Depth of Bury feet [m]	Approximate Weight lb [kg]
2 [0.61]	42 [19]
3 [0.91]	46 [21]
4 [1.22]	50 [23]
5 [1.52]	54 [24]
6 [1.83]	58 [26]

PRODUCT	DESCRIPTION	DEPTH OF BURY FEET	LIST PRICE
Z1365*	1-1/4" Inlet/Hose Connection D.C.C.I. Box and Scoriated Cover with Galvanized Steel Casing	2′	8,782.00
		3′	9,064.00
	1-1/2" Inlet/Hose Connection D.C.C.I. Box and Scoriated Cover with Galvanized Steel Casing	2′	9,636.00
		3′	9,925.00
		4′	10,206.00
		5′	10,513.00
		6′	10,818.00
	2" Inlet/Hose Connection D.C.C.I. Box and Scoriated Cover with Galvanized Steel Casing	2′	11,249.00
		3′	11,535.00
		4′	11,816.00
		5′	12,126.00
		6′	12,429.00

SUFFIXES		ADD
–DP14	1/4" IP Drain Port in Box	190.00
–NB	Polished Nickel Bronze Face	579.00
–PB	Polished Bronze Face	333.00
–RK	Hydrant Parts Repair Kit	1,218.00

BEST SELLERS	LIST PRICE
Z1365-1-1/2X14	POA
Z1365-1-1/2X14-PB	POA

SEE LEGACY ADDENDUM ON PAGE 369 FOR MORE INFORMATION

Items designated as Best Sellers are most specified and are generally in stock for shipment.
This symbol denotes a product that is engineered to reduce installation and rework time.
For additional product information, please visit www.zurn.com

†Lead-free product. For more information, see page 270.
**Regularly furnished unless otherwise specified.*

Z1370 GROUND HYDRANT – ENCASED, HOSE STORAGE, NON-FREEZE

ENGINEERING SPECIFICATION

Zurn Z1370 encased, non-freeze ground hydrant is designed for flush with grade or finished floor installation. Features galvanized steel casing, all bronze interior components bronze seat and replaceable seat washer, and non-turning operating rod with free-floating compression closure valve. Dura-Coated cast iron box provides hose storage and comes complete with hinged, scoriated cover with operating key lock. Hydrant is equipped with a tapped 1/4″ NPT drain port in valve housing. (Hose should always be disconnected for storage.)

NOTES

Important: Hydrant must be opened one turn minimum to seal drain port during use.

Depth of Bury feet [m]	Approximate Weight lb [kg]
2 [0.61]	81 [37]
3 [0.91]	85 [39]
4 [1.22]	89 [40]
6 [1.83]	97 [44]

PRODUCT	DESCRIPTION	DEPTH OF BURY FEET	LIST PRICE
Z1370*	3/4″ Hose Connection D.C.C.I. Box and Scoriated Cover with Galvanized Steel Casing	2′	3,798.00
		3′	3,967.00
		4′	4,088.00
		6′	4,240.00
SUFFIXES			**ADD**
–BC	Bronze Casing		379.00
–DP12	1/2″ IP Drain Port in Box		190.00
–NB	Polished Nickel Bronze Face (Add 3/16″ to 8-1/2″ Dim. and 3/4″ to 12-1/2″ Dim.)		3,002.00
–RK	Hydrant Parts Repair Kit		333.00
BEST SELLER			**LIST PRICE**
Z1370-3/4X2			3,798.00

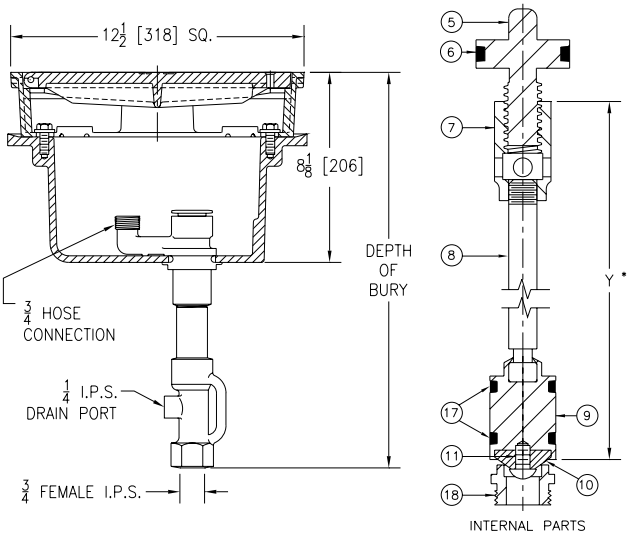

†Lead-free product. For more information, see page 270.
*Regularly furnished unless otherwise specified.

Items designated as Best Sellers are most specified and are generally in stock for shipment.
This symbol denotes a product that is engineered to reduce installation and rework time.
For additional product information, please visit www.zurn.com

Z1375 GROUND HYDRANT – ENCASED, MODERATE CLIMATE, INTERIOR USE

ENGINEERING SPECIFICATION

Zurn Z1375 encased, moderate climate ground hydrant is designed for flush with grade or finished floor installation. Comes complete with all bronze interior parts, replaceable bronze seat and seat washer, and non-turning operating coupling with free-floating compression closure valve. Includes Dura-Coated cast iron box and hinged, scoriated cover with "WATER" cast on cover.

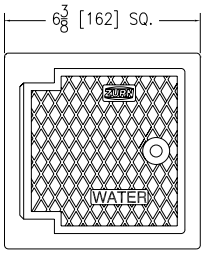

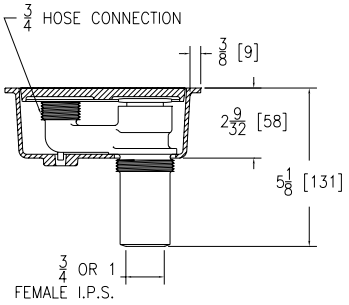

Approximate Weight lb [kg]
8 [4]

PRODUCT	DESCRIPTION	APP. WT. LBS.	LIST PRICE
Z1375*	3/4" Hose Connection D.C.C.I. Box and Scoriated Cover with Bronze Hydrant	8	1,429.00
SUFFIXES			**ADD**
–DP14	1/4" Drain Port in Box		190.00
–HD-8	Heavy–Duty Ductile Iron Cover with Cast Iron Box		399.00
–HD-10	Heavy Duty Stainless Steel Cover with Nickel Box		850.00
–NB	Polished Nickel Bronze Face		369.00
–PB	Polished Bronze Face		157.00
–RK	Hydrant Parts Repair Kit		333.00
–VB	3/4" Adapter Vacuum Breaker (Requires deeper box to accommodate vacuum breaker)		139.00
BEST SELLER			**LIST PRICE**
Z1375-3/4			1,429.00

Z1385 POST HYDRANT – EXPOSED HEAD, NON-FREEZE

ENGINEERING SPECIFICATION

Zurn Z1385 exposed, non-freeze post hydrant features galvanized steel casing and cast aluminum casing guard, all bronze interior parts, bronze seat and replaceable seat washer, and non-turning operating rod with free-floating compression closure valve with 3/4" or 1" connection. Includes operating key. Hydrant is equipped with a tapped 1/4" NPT drain port in valve housing.

NOTES

1. 'B' dimension based on outlet connection 30" above ground.
2. Important: Hydrant must be opened one turn minimum to seal drain port during use.
3. ‡Non-Freeze feature will not automatically function when (-VB suffix) vacuum breaker is specified. The vacuum breaker must be manually tripped to facilitate drainage of hydrant.

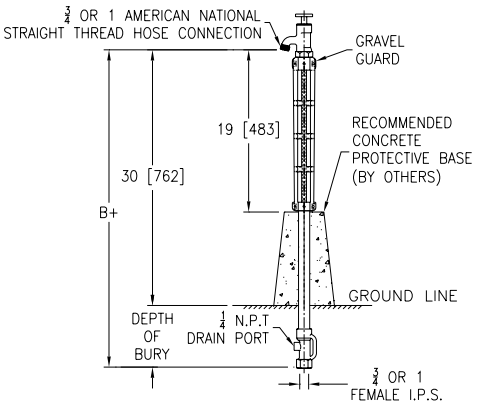

Depth of Bury feet [m]	B+ feet [m]	Approximate Weight lb [kg]
2 [0.61]	4-1/2 [1.37]	25 [11]
3 [0.91]	5-1/2 [1.68]	29 [13]
4 [1.22]	6-1/2 [1.98]	33 [15]
5 [1.52]	7-1/2 [2.29]	37 [17]
6 [1.83]	8-1/2 [2.59]	41 [19]
7 [2.13]	9-1/2 [2.90]	45 [20]
8 [2.44]	10-1/2 [3.20]	49 [22]

PRODUCT	DESCRIPTION	DEPTH OF BURY FEET	LIST PRICE
Z1385*	3/4" Inlet/Hose Connection Bronze Exposed Head with Galvanized Steel Casing and Aluminum Casing Guard	2′	2,015.00
		3′	2,180.00
		4′	2,345.00
		5′	2,515.00
		6′	2,688.00
		7′	2,875.00
		8′	3,055.00
	1" Inlet/Hose Connection Bronze Exposed Head with Galvanized Steel Casing and Aluminum Casing Guard	2′	2,576.00
		3′	2,743.00
		4′	2,909.00
		5′	3,075.00
		6′	3,250.00
		7′	3,432.00
		8′	3,614.00
SUFFIXES			**ADD**
–RK	Hydrant Parts Repair Kit		333.00
–VB	3/4" Adapter Vacuum Breaker‡		139.00
–WH	Wheel Handle		292.00
BEST SELLERS			**LIST PRICE**
Z1385-3/4X2			2,015.00
Z1385-3/4X2-VB			2,154.00
Z1385-3/4X3			2,180.00

Items designated as Best Sellers are most specified and are generally in stock for shipment.
This symbol denotes a product that is engineered to reduce installation and rework time.
For additional product information, please visit www.zurn.com

†Lead-free product. For more information, see page 270.
**Regularly furnished unless otherwise specified.*

Z1388XL ROOF HYDRANT – EXPOSED HEAD, NON-FREEZE

XL LEAD FREE

ENGINEERING SPECIFICATION

Zurn Z1388XL exposed, lead-free†, non-freeze roof hydrant features a Dura-Coated cast iron head and lift handle with lock option, galvanized steel casing, bronze and stainless steel interior components, 3/4″ inlet connection with 1/8″ tapped drain port on housing, and 3/4″ male hose connection. Comes complete with Dura-Coated cast iron roof support sleeve, wide anchoring flange, and clamp collar.

NOTES

‡Non-Freeze feature will not automatically function when vacuum breaker (-VB suffix) is specified. The vacuum breaker must be manually tripped to facilitate drainage of hydrant.

Approximate Weight lb [kg]
27 [12]

BEST SELLERS	LIST PRICE
Z1388XL	3,218.00
Z1388XL-VB	3,359.00

PRODUCT	DESCRIPTION	APP. WT. LBS.	LIST PRICE
Z1388XL*	3/4″ Inlet/Hose Connection	27	3,218.00
SUFFIXES			**ADD**
–AC	Aluminum Casing Guard		223.00
–RK	Hydrant Parts Repair Kit (HYD-RK-Z1395XL)		249.00
–VB	3/4″ Adapter Vacuum Breaker‡		141.00

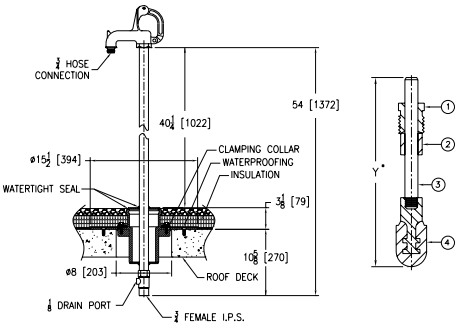

Z1390 POST HYDRANT – EXPOSED HEAD, NON-FREEZE

ENGINEERING SPECIFICATION

Zurn Z1390 exposed, non-freeze post hydrant features galvanized steel casing and cast aluminum casing guard, all bronze interior parts, bronze seat and replaceable seat washer, and non-turning operating rod with free-floating compression closure valve with 1-1/4″, 1-1/2″, or 2″ connection. Includes T-handle operating key. Hydrant is equipped with a tapped 1/4″ NPT drain port in valve housing.

NOTES

1. 'B' dimension based on outlet connection 30″ above ground.
2. Important: Hydrant must be opened one turn minimum to seal drain port during use.

Depth of Bury feet [m]	B+ feet [m]	Approximate Weight lb [kg]
3 [0.91]	5-1/2 [1.68]	62 [28]
4 [1.22]	6-1/2 [1.98]	67 [30]
5 [1.52]	7-1/2 [2.29]	72 [33]
6 [1.83]	8-1/2 [2.59]	77 [35]
8 [2.44]	10-1/2 [3.20]	87 [39]

BEST SELLERS	LIST PRICE
Z1390-1-1/2X3	7,295.00
Z1390-1-1/2X4	7,795.00

PRODUCT	DESCRIPTION	DEPTH OF BURY FEET	LIST PRICE
Z1390*	1-1/4″ Hose Connection Bronze Exposed Head with Galvanized Steel Casing and Aluminum Casing Guard	3′	5,477.00
		4′	5,971.00
		5′	6,265.00
		6′	6,552.00
		8′	7,214.00
	1-1/2″ Hose Connection Bronze Exposed Head with Galvanized Steel Casing and Aluminum Casing Guard	3′	7,295.00
		4′	7,795.00
		5′	8,085.00
		6′	8,368.00
		8′	9,031.00
	2″ Hose Connection Bronze Exposed Head with Galvanized Steel Casing and Aluminum Casing Guard	3′	9,027.00
		4′	9,523.00
		5′	9,816.00
		6′	10,101.00
		8′	10,763.00
SUFFIXES			**ADD**
–RK	Hydrant Parts Repair Kit		1,218.00
–WH	Wheel Handle		576.00

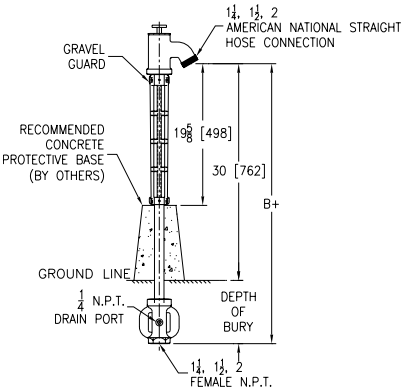

†Lead-free product. For more information, see page 270.
**Regularly furnished unless otherwise specified.*

Items designated as Best Sellers are most specified and are generally in stock for shipment.
This symbol denotes a product that is engineered to reduce installation and rework time.
For additional product information, please visit www.zurn.com

Z1395XL YARD HYDRANT – EXPOSED HEAD, NON-FREEZE

XL LEAD FREE

ENGINEERING SPECIFICATION

Zurn Z1395XL exposed, lead-free†, non-freeze yard hydrant features a Dura-Coated cast iron head and lift handle with lock option, galvanized steel casing, bronze and stainless steel interior components, 3/4″ inlet connection with 1/8″ tapped drainage port on housing, and 3/4″ male hose connection.

NOTES

1. B′ dimension based on outlet connection 30″ above ground.
2. ‡Non-Freeze feature will not automatically function when vacuum breaker (-VB suffix) is specified. The vacuum breaker must be manually tripped to facilitate drainage of hydrant.

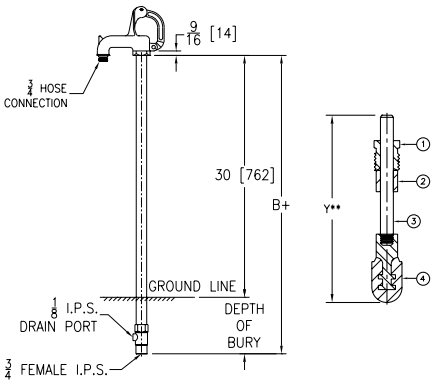

Depth of Bury feet [m]	B+ feet [m]	Approximate Weight lb [kg]
2 [0.61]	4-1/2 [1.37]	15 [7]
3 [0.91]	5-1/2 [1.68]	19 [9]
4 [1.22]	6-1/2 [1.98]	23 [10]
5 [1.52]	7-1/2 [2.29]	27 [12]
6 [1.83]	8-1/2 [2.59]	31 [14]
8 [2.44]	10-1/2 [3.20]	39 [18]

PRODUCT	DESCRIPTION	DEPTH OF BURY FEET	LIST PRICE
Z1395XL*	3/4″ Hose Connection D.C.C.I. Head with Galvanized Steel Casing	2′	1,202.00
		3′	1,287.00
		4′	1,320.00
		5′	1,358.00
		6′	1,396.00
		8′	1,510.00
SUFFIXES			**ADD**
–AC	Aluminum Casing Guard		223.00
–RK	Hydrant Parts Repair Kit		269.00
–VB	3/4″ Adapter Vacuum Breaker‡		141.00
BEST SELLERS			**LIST PRICE**
Z1395XL-3/4x2			1,202.00
Z1395XL-3/4x3			1,287.00

SEE LEGACY ADDENDUM ON PAGE 369 FOR MORE INFORMATION

Items designated as Best Sellers are most specified and are generally in stock for shipment.
This symbol denotes a product that is engineered to reduce installation and rework time.
For additional product information, please visit www.zurn.com

†Lead-free product. For more information, see page 270.
**Regularly furnished unless otherwise specified.*

Z1397XL FLO-TROL YARD HYDRANT – EXPOSED HEAD, NON-FREEZE

XL LEAD FREE

ENGINEERING SPECIFICATION

Zurn Z1397XL exposed, lead-free†, non-freeze yard hydrant features a Dura-Coated cast iron head and lift handle with lock option, slotted links for adjustable locking flow control, galvanized steel casing, bronze and stainless steel interior components, 3/4″ inlet connection with 1/8″ tapped drainage port on housing, and 3/4″ male hose connection.

NOTES

‡Non-Freeze feature will not automatically function when vacuum breaker (-VB suffix) is specified. The vacuum breaker must be manually tripped to facilitate drainage of hydrant.

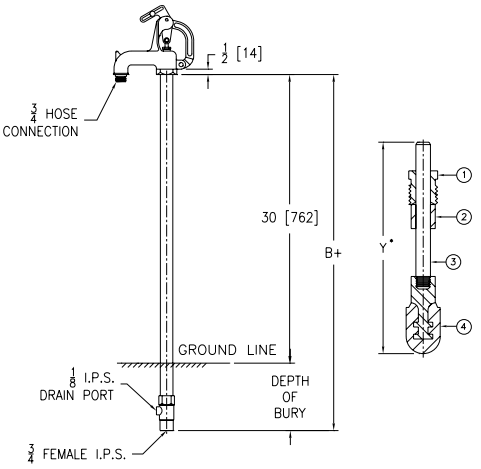

Depth of Bury feet [m]	B+ feet [m]	Approximate Weight lb [kg]
2 [0.61]	4-1/2 [1.37]	15 [7]
3 [0.91]	5-1/2 [1.68]	19 [9]
4 [1.22]	6-1/2 [1.98]	23 [10]
5 [1.52]	7-1/2 [2.29]	27 [12]
6 [1.83]	8-1/2 [2.59]	31 [14]
8 [2.44]	10-1/2 [3.20]	39 [18]

PRODUCT	DESCRIPTION	DEPTH OF BURY FEET	LIST PRICE
Z1397XL*	3/4″ Hose Connection D.C.C.I. Head with Galvanized Steel Casing	2′	1,202.00
		3′	1,287.00
		4′	1,320.00
		5′	1,358.00
		6′	1,396.00
		8′	1,510.00
SUFFIXES			**ADD**
–AC	Aluminum Casing Guard		223.00
–RK	Hydrant Parts Repair Kit		269.00
–VB	3/4″ Adapter Vacuum Breaker‡		141.00

SEE LEGACY ADDENDUM ON PAGE 369 FOR MORE INFORMATION

†Lead-free product. For more information, see page 270.
*Regularly furnished unless otherwise specified.

Items designated as Best Sellers are most specified and are generally in stock for shipment.
This symbol denotes a product that is engineered to reduce installation and rework time.
For additional product information, please visit www.zurn.com

CLEANOUTS

CLEANOUTS – APPLICATION INDEX	288
Z1400-BZ1 FLOOR CLEANOUT WITH "TYPE B" COVER AND EZ1™ TECHNOLOGY	289
Z1400-SZ1 BODY ASSEMBLY W/ "TYPE S" COVER AND EZ1™ TECHNOLOGY	290
Z1400-BZ1-DP BODY ASSEMBLY W/ "TYPE B" COVER, DECK PLATE AND EZ1™ TECHNOLOGY	291
Z1400-SZ1-DP BODY ASSEMBLY W/ "TYPE S" COVER, DECK PLATE AND EZ1™ TECHNOLOGY	292
Z1400B-DP BODY ASSEMBLY W/ "TYPE B" COVER AND DECK PLATE	293
Z1400S-DP BODY ASSEMBLY W/ "TYPE S" COVER AND DECK PLATE	294
Z1400 EXTRA HEAVY-DUTY "LEVEL-TROL" ADJUSTABLE FLOOR CLEANOUT	295
Z1400-BZ "LEVEL-TROL" ADJUSTABLE LEVELING FLOOR CLEANOUT	296
Z1400-SZ "LEVEL-TROL" SQUARE ADJUSTABLE LEVELING FLOOR CLEANOUT	297
Z1400-K HEAVY-DUTY "LEVEL-TROL" ADJUSTABLE FLOOR CLEANOUT WITH ANCHOR FLANGE	298
Z1402 HEAVY-DUTY NON-ADJUSTABLE FLOOR CLEANOUT	299
Z1404 HEAVY-DUTY FLOOR ACCESS HOUSING	300
Z1406 HEAVY-DUTY ADJUSTABLE SPIGOT CLEANOUT	300
Z1440 CLEANOUT FERRULE WITH PLUG	301
Z1445 CLEANOUT TEE	302
Z1446 CLEANOUT WITH ROUND WALL ACCESS COVER	302
Z1449 CLEANOUT FERRULE WITH PLUG	303
Z1454 ADJUSTABLE FLOOR CLEANOUT WITH FLASHING FLANGE	303
Z1456 DECK CLEANOUT	304
Z1457 FLOOR ACCESS COVER	304
Z1460 SQUARE WALL ACCESS PANEL	305
Z1461 SQUARE HINGED ACCESS PANEL	305
Z1462 SECURED WALL ACCESS PANEL	306
Z1463 ROUND SCORIATED ACCESS COVER	306
Z1464 WATER SUPPLY CONTROL BOX ASSEMBLY	307
Z1468 ACCESS COVER AND PLUG	307
Z1469 ROUND ACCESS COVER	308
Z1470 BRONZE CLEANOUT PLUG	308
Z1471 AIR INLET	309
Z1474 HEAVY-DUTY CLEANOUT HOUSING	309

CLEANOUTS – APPLICATION INDEX

Product selection should be made with a specific application and the type of construction in mind. The varied types and sizes of Zurn cleanouts, along with their options, offer a selection for all applications.

APPLICATION	TYPE	RECOMMENDED CLEANOUT
Finished Floor Areas	"Level-Trol" Adjustable	Z1400, Z1400-K, ZN1400, ZN1454
	Non-Adjustable	ZN1402
	Linoleum, Tile or Composition Floors (Adjustable)	Z1400B-DP, Z1400S-DP, Z1400-BZ, ZN1400-K, ZN1400-TX (Square), ZN1400-X (Round)
	Linoleum, Tile or Composition Floors (Adjustable) with EZ1™ Technology (Post Pour Adjustment)	Z1400-BZ1, Z1400-SZ1, Z1400-BZ1-DP, Z1400-SZ1-DP
	Linoleum, Tile or Composition Floors (Non-Adjustable)	ZN1402-TX (Square), ZN1402-X (Round)
	Terrazzo Floors	Z1400-K, ZN1400-Z
Heavy Traffic and Industrial Areas	"Level-Trol" Adjustable	Z1400, ZN1400-HD (Round or Square), Z1400-K
	Non-Adjustable	ZN1402-HD, Z1474
Medium Traffic and Areaways	Adjustable (Finished Area)	Z1454, Z1404
Exposed Drainage Lines	Horizontal and Vertical Cleanouts	Z1440, Z1445
Access Covers and Boxes	Deck Areas	Z1456, Z1457, Z1463
	Square Covers	Z1460, Z1461, Z1462
	Round Covers	Z1463, Z1469
	Access Boxes	Z1464
Air Inlets	Finished Areas	Z1471
General Purpose	Cleanout	Z1440, Z1445, Z1449
	Cleanout Plug	Z1470

Z1400-BZ1 FLOOR CLEANOUT WITH "TYPE B" COVER AND EZ1™ TECHNOLOGY

PATENT PENDING

ENGINEERING SPECIFICATION

Zurn Z1400-BZ1 cleanout features Dura-Coated cast iron body with bottom outlet, gas and water tight threaded ABS tapered plug, and top assembly. EZ1 drainage series is engineered to simplify product installation. Rough-in adapter provides up to 1-1/4" [32] of vertical post pour adjustment, pre-packaged shims for tilt correction, and integrated, self-contained Type B light duty scoriated cover with rough-in cover for protection during concrete pour. Cleanout is designed in accordance with ASME A112.36.2M.

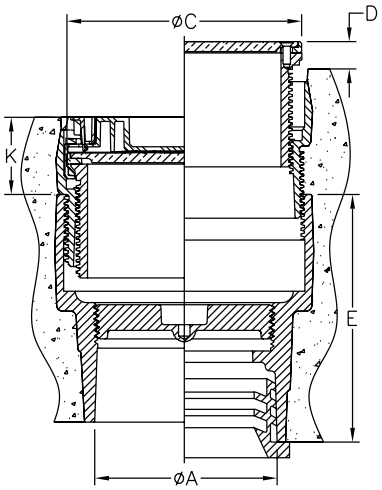

Cover Designation	Dimensions in inches						Approximate Weight lb [kg]
	A Pipe Size	C	D		K		
			Min.	Max.	Min.	Max.	
-5B	2 [51]	5-5/32 [131]	0	1 [25]	1-23/32 [44]	2-15/16 [75]	10 [5]
	3-4 [76-102]	5-5/32 [131]	0	1 [25]	1-23/32 [44]	2-15/16 [75]	12 [5]
-6B	2 [51]	6-8/32 [156]	0	31/32 [25]	1-11/16 [43]	2-27/32 [72]	11 [5]
	3-4 [76-102]	6-8/32 [156]	0	31/32 [25]	1-11/16 [43]	2-27/32 [72]	13 [6]
-8B	6 [152]	7-7/8 [200]	0	1 [25]	1-7/8 [48]	3-1/32 [77]	19 [9]

PREFIXES	DESCRIPTION	PIPE SIZE	LIST PRICE
ZN1400-BZ1*	D.C.C.I. with Polished Nickel Bronze Top	2"	626.00
		3"	660.00
		4"	883.00
		6"	1,434.00
ZB1400-BZ1	D.C.C.I. with Polished Bronze Top	2"	561.00
		3"	604.00
		4"	821.00
		6"	1,378.00
ZS1400-BZ1	D.C.C.I. with Polished Type 304 (CF8) Stainless Steel Top	2"	POA
		3"	POA
		4"	POA
		6"	POA

OUTLET (SPECIFY PIPE SIZE IN INCHES AND TYPE OF OUTLET)				
TYPE	DESCRIPTION	PIPE SIZE/OUTLET TYPE	E BODY HT. DIM.	ADD
NH	No-Hub	2NH, 3NH	4-3/4"	N/C
		4NH	5"	N/C
		6NH	5-1/2"	N/C
NL	Neo-Loc	2NL, 4NL	4-3/4"	N/C
		3NL	5-7/16"	N/C
		6NL	5-1/2"	N/C

SUFFIXES			ADD
–AR	Acid Resisting Epoxy Coated Finish		351.00
–BP	Bronze Plug	2", 3", 4"	194.00
–G	Galvanized Cast Iron		223.00
–TC	Neo-Loc Test Cap Gasket (2", 3", 4" NL Bottom Outlet Only)		24.00
–UP	1-3/4" Pre-Pour Adjustment Extension Adapter		140.00
–VP	Vandal-Proof Screws		72.00

**Regularly furnished unless otherwise specified.*

Items designated as Best Sellers are most specified and are generally in stock for shipment.

This symbol denotes a product that is engineered to reduce installation and rework time.

For additional product information, please visit www.zurn.com

Z1400-SZ1 BODY ASSEMBLY W/ "TYPE S" COVER AND EZ1™ TECHNOLOGY

PATENT PENDING

ENGINEERING SPECIFICATION

Zurn Z1400-SZ1 cleanout features Dura-Coated cast iron body, bottom outlet, gas and water tight threaded ABS tapered plug, and top assembly. EZ1 drainage series is engineered to simplify product installation. Concrete shield provides up to 1-1/4" [32] of vertical post pour adjustment, pre-packaged shims for tilt correction, and integrated, self-contained Type S light duty scoriated cover with rough-in cover for protection during concrete pour. Cleanout is designed in accordance with ASME A112.36.2M.

Cover Designation	Dimensions in inches						Approximate Weight lb [kg]
	A Pipe Size	CxC	D		K		
			Min.	Max.	Min.	Max.	
-5S	2 [51]	5 X 5 [127 X 127]	0	1 [25]	1-15/16 [49]	3-1/8 [79]	12 [5]
	3-4 [76-102]	5 X 5 [127 X 127]	0	1 [25]	1-15/16 [49]	3-1/8 [79]	14 [6]
-6S	2 [51]	6 X 6 [152 X 152]	0	31/32 [25]	2 [51]	3-3/16 [81]	13 [6]
	3-4 [76-102]	6 X 6 [152 X 152]	0	31/32 [25]	2 [51]	3-3/16 [81]	15 [7]

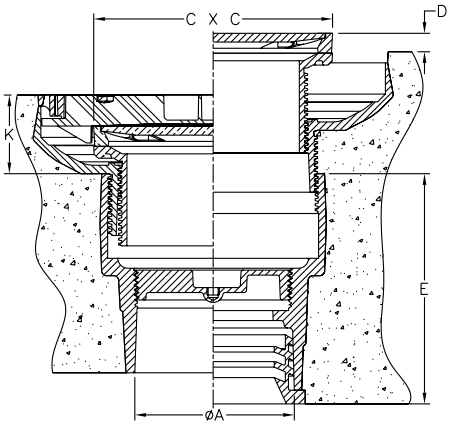

PREFIXES	DESCRIPTION	PIPE SIZE	LIST PRICE
ZN1400-SZ1*	D.C.C.I. with Polished Nickel Bronze Top	2"	626.00
		3"	660.00
		4"	883.00
ZB1400-SZ1	D.C.C.I. with Polished Bronze Top	2"	626.00
		3"	660.00
		4"	883.00
ZS1400-SZ1	D.C.C.I. with Polished Type 304 (CF8) Stainless Steel Top	2"	POA
		3"	POA
		4"	POA

OUTLET (SPECIFY PIPE SIZE IN INCHES AND TYPE OF OUTLET)				
TYPE	DESCRIPTION	PIPE SIZE/ OUTLET TYPE	E BODY HT. DIM.	ADD
NH	No-Hub	2NH, 3NH	4-3/4"	N/C
		4NH	5"	N/C
NL	Neo-Loc	2NL, 4NL	4-3/4"	N/C
		3NL	5-7/16"	N/C

SUFFIXES			ADD
–AR	Acid Resisting Epoxy Coated Finish		351.00
–BP	Bronze Plug	2", 3", 4"	194.00
–G	Galvanized Cast Iron		223.00
–TC	Neo-Loc Test Cap Gasket (2," 3", 4" NL Bottom Outlet Only)		24.00
–VP	Vandal-Proof Screws		72.00

For additional product information, please visit www.zurn.com

**Regularly furnished unless otherwise specified.*

Items designated as Best Sellers are most specified and are generally in stock for shipment.

This symbol denotes a product that is engineered to reduce installation and rework time.

Z1400-BZ1-DP BODY ASSEMBLY W/ "TYPE B" COVER, DECK PLATE AND EZ1™ TECHNOLOGY

PATENT PENDING

ENGINEERING SPECIFICATION

Zurn Z1400-BZ1-DP cleanout features Dura-Coated cast iron body, gas and water tight cleanout plug, stainless steel deck plate, and top assembly. EZ1 drainage series is engineered to simplify product installation. Concrete shield provides up to 1" [25] of vertical post pour adjustment, pre-packaged shims for tilt correction, and integrated, self contained Type B light duty scoriated cover with rough-in cover for protection during concrete pour. Cleanout is designed in accordance with ASME A112.36.2M.

Cover Designation	Dimensions in inches				Approximate Weight lb [kg]
	A Pipe Size	B	K		
			Min.	Max.	
-5B	2-3 [51-76]	5 [127]	29/32 [23]	1-13/16 [46]	16 [7]

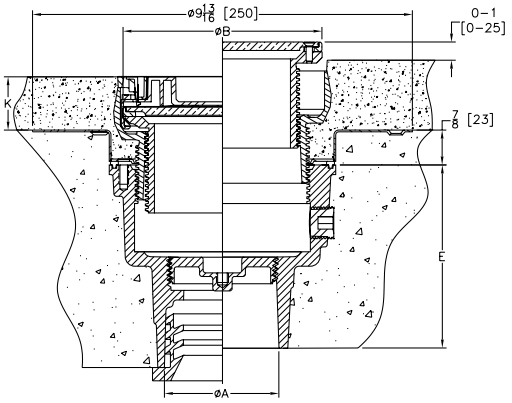

PREFIXES	DESCRIPTION	PIPE SIZE	LIST PRICE
ZN1400-BZ1-DP*	D.C.C.I. with Polished Nickel Bronze Top	2", 3"	1,075.00
ZB1400-BZ1-DP	D.C.C.I. with Polished Bronze Top	2", 3"	1,017.00
ZS1400-BZ1-DP	D.C.C.I. with Polished Type 304 (CF8) Stainless Steel Top	2", 3"	1,765.00

OUTLET (SPECIFY PIPE SIZE IN INCHES AND TYPE OF OUTLET)				
TYPE	DESCRIPTION	PIPE SIZE/ OUTLET TYPE	E BODY HT. DIM.	ADD
NH	No-Hub	2NH, 3NH	4-3/4"	N/C
NL	Neo-Loc	2NL	5-1/4"	N/C
		3NL	4-3/8"	N/C

SUFFIXES			ADD
–AR	Acid Resisting Epoxy Coated Finish		351.00
–BP	Bronze Plug	2", 3"	194.00
–CC	Stainless Steel Clamp Collar		168.00
–G	Galvanized Cast Iron		223.00
–TC	Neo-Loc Test Cap Gasket (2", 3" NL Bottom Outlet Only)		24.00
–VP	Vandal-Proof Screws		72.00

**Regularly furnished unless otherwise specified.*

Items designated as Best Sellers are most specified and are generally in stock for shipment.

This symbol denotes a product that is engineered to reduce installation and rework time.

For additional product information, please visit www.zurn.com

Z1400-SZ1-DP BODY ASSEMBLY W/ "TYPE S" COVER, DECK PLATE AND EZ1™ TECHNOLOGY

PATENT PENDING

ENGINEERING SPECIFICATION

Zurn Z1400-SZ1-DP cleanout features Dura-Coated cast iron body, gas and water tight cleanout plug, stainless steel deck plate, and top assembly. EZ1 drainage series is engineered to simplify product installation. Concrete shield provides up to 1" [25] of vertical post pour adjustment, pre-packaged shims for tilt correction , and integrated, self contained Type S light duty scoriated cover with rough-in cover for protection during concrete pour. Cleanout is designed in accordance with ASME A112.36.2M.

Cover Designation	Dimensions in inches				Approximate Weight lb [kg]
	A Pipe Size	BxB	K		
			Min.	Max.	
-5S	2-3 [51-76]	5 X 5 [127 X 127]	1-15/16 [49]	2-3/32 [53]	17 [8]

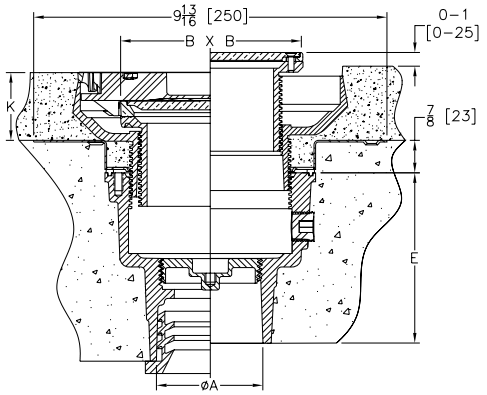

PREFIXES	DESCRIPTION	PIPE SIZE	LIST PRICE
ZN1400-SZ1-DP*	D.C.C.I. with Polished Nickel Bronze Top	2", 3"	1,075.00
ZB1400-SZ1-DP	D.C.C.I. with Polished Bronze Top	2", 3"	1,017.00
ZS1400-SZ1-DP	D.C.C.I. with Polished Type 304 (CF8) Stainless Steel Top	2", 3"	1,765.00

OUTLET (SPECIFY PIPE SIZE IN INCHES AND TYPE OF OUTLET)				
TYPE	DESCRIPTION	PIPE SIZE/ OUTLET TYPE	E BODY HT. DIM.	ADD
NH	No-Hub	2NH, 3NH	4-3/4"	N/C
NL	Neo-Loc	2NL	5-1/4"	N/C
		3NL	4-3/8"	N/C

SUFFIXES			ADD
–AR	Acid Resisting Epoxy Coated Finish		351.00
–BP	Bronze Plug	2", 3"	194.00
–CC	Stainless Steel Clamp Collar		168.00
–G	Galvanized Cast Iron		223.00
–TC	Neo-Loc Test Cap Gasket (2", 3" NL Bottom Outlet Only)		24.00
–UP	1-3/4" Pre-Pour Adjustment Extension Adapter		140.00
–VP	Vandal-Proof Screws		72.00

For additional product information, please visit www.zurn.com

**Regularly furnished unless otherwise specified.*

Items designated as Best Sellers are most specified and are generally in stock for shipment.

This symbol denotes a product that is engineered to reduce installation and rework time.

Z1400B-DP BODY ASSEMBLY W/ "TYPE B" COVER AND DECK PLATE

PATENT PENDING

ENGINEERING SPECIFICATION

Zurn Z1400B-DP cleanout features Dura-Coated cast iron body, gas and water tight cleanout plug, stainless steel deck plate, and Type B polished nickel bronze light duty top assembly. Cleanout is designed in accordance with ASME A112.36.2M.

Cover Designation	Dimensions in inches				Approx. Wt. Lbs. [kg]
	A Pipe Size	B	K		
			Min.	Max.	
-5B	2-3 [51-76]	5 [127]	0	1-7/16 [37]	11 [5]

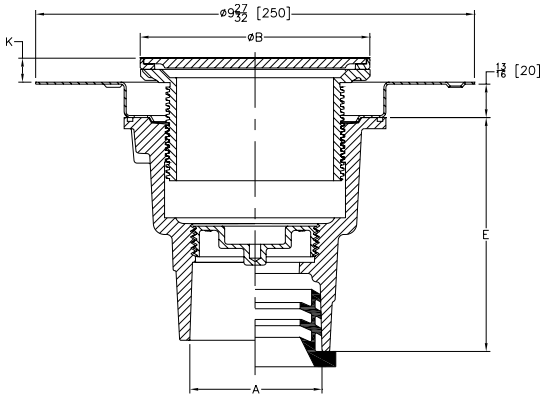

PREFIXES	DESCRIPTION	PIPE SIZE	LIST PRICE
ZN1400-B-DP*	D.C.C.I. with Polished Nickel Bronze Top	2", 3"	1,075.00
ZB1400-B-DP	D.C.C.I. with Polished Bronze Top	2", 3"	1,017.00
ZS1400-B-DP	D.C.C.I. with Polished Type 304 (CF8) Stainless Steel Top	2", 3"	1,765.00

OUTLET (SPECIFY PIPE SIZE IN INCHES AND TYPE OF OUTLET)				
TYPE	DESCRIPTION	PIPE SIZE/ OUTLET TYPE	E BODY HT. DIM.	ADD
NH	No-Hub	2NH	4-7/8"	N/C
		3NH	4-3/4"	N/C
NL	Neo-Loc	2NL	5-1/4"	N/C
		3NL	4-3/8"	N/C

SUFFIXES			ADD
–AR	Acid Resisting Epoxy Coated Finish		351.00
–BP	Bronze Plug	2", 3"	194.00
–CC	Stainless Steel Clamp Collar		168.00
–FI	Floor Insert		58.00
–G	Galvanized Cast Iron		223.00
–TC	Neo-Loc Test Cap Gasket (2", 3" NL Bottom Outlet Only)		24.00
–VP	Vandal-Proof Screws		72.00

*Regularly furnished unless otherwise specified.

Items designated as Best Sellers are most specified and are generally in stock for shipment.

This symbol denotes a product that is engineered to reduce installation and rework time.

For additional product information, please visit www.zurn.com

Z1400S-DP BODY ASSEMBLY W/ "TYPE S" COVER AND DECK PLATE

PATENT PENDING

ENGINEERING SPECIFICATION

Zurn Z1400S-DP cleanout features Dura-Coated cast iron body, gas and water tight cleanout plug, stainless steel deck plate, and Type S polished nickel bronze light duty top assembly. Cleanout is designed in accordance with ASME A112.36.2M.

Cover Designation	Dimensions in inches				Approximate Weight lb [kg]
	A Pipe Size	BxB	K		
			Min.	Max.	
-5S	2-3 [51-76]	5 X 5 [127 X 127]	7/16 [11]	1-7/16 [37]	12 [5]

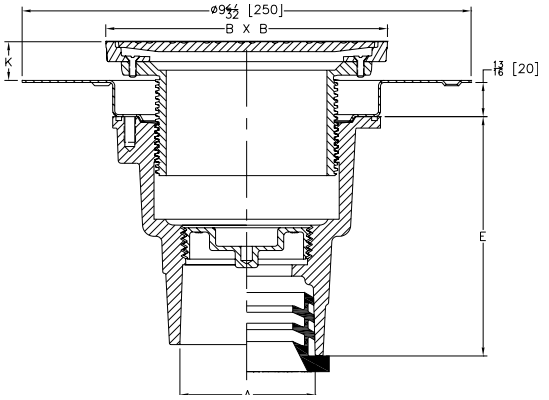

PREFIXES	DESCRIPTION	PIPE SIZE	LIST PRICE
ZN1400-S-DP*	D.C.C.I. with Polished Nickel Bronze Top	2", 3"	1,075.00
ZB1400-S-DP	D.C.C.I. with Polished Bronze Top	2", 3"	1,017.00
ZS1400-S-DP	D.C.C.I. with Polished Type 304 (CF8) Stainless Steel Top	2", 3"	1,765.00

OUTLET (SPECIFY PIPE SIZE IN INCHES AND TYPE OF OUTLET)				
TYPE	DESCRIPTION	PIPE SIZE/ OUTLET TYPE	E BODY HT. DIM.	ADD
NH	No-Hub	2NH	4-7/8"	N/C
		3NH	4-3/4"	N/C
NL	Neo-Loc	2NL	5-1/4"	N/C
		3NL	4-3/8"	N/C

SUFFIXES			ADD
–AR	Acid Resisting Epoxy Coated Finish		351.00
–BP	Bronze Plug	2", 3"	194.00
–CC	Stainless Steel Clamp Collar		168.00
–G	Galvanized Cast Iron		223.00
–TC	Neo-Loc Test Cap Gasket (2", 3" NL Bottom Outlet Only)		24.00
–VP	Vandal-Proof Screws		72.00

For additional product information, please visit www.zurn.com

**Regularly furnished unless otherwise specified.*

Items designated as Best Sellers are most specified and are generally in stock for shipment.

This symbol denotes a product that is engineered to reduce installation and rework time.

Z1400 EXTRA HEAVY-DUTY "LEVEL-TROL" ADJUSTABLE FLOOR CLEANOUT

ENGINEERING SPECIFICATION

Zurn Z1400 level-trol adjustable floor cleanout features Dura-Coated cast iron body, gas and watertight ABS tapered thread plug, and round scoriated cast iron extra heavy-duty secured top (specify finish Z, ZB, ZN, ZS) adjustable to finished floor.

A Pipe Size/ Outlet Type	Dimensions in inches [mm]		Approximate Weight lb [kg]
	C	E Body Height Dimensions	
Inside Caulk (IC)			
2IC	6-1/8 [156]	6-7/8 [175]	14 [6]
3IC	6-1/8 [156]		14 [6]
4IC	7-1/4 [184]		18 [8]
6IC	9-1/4 [235]		32 [15]
No-Hub (NH)			
2NH	4-1/8 [105]	4-5/8 [117]	7 [3]
3NH	4-1/8 [105]	4-3/4 [121]	8 [4]
4NH	5-1/8 [130]	4-3/4 [121]	10 [5]
6NH	8-1/4 [210]	4-3/4 [121]	22 [10]
8NH	9-1/4 [235]	7-1/2 [191]	30 [14]
Neo-Loc (NL)			
2NL	4-1/8 [105]	4-3/4 [121]	8 [4]
3NL	5-1/8 [130]	4-3/4 [121]	11 [5]
4NL	5-1/8 [130]	4-3/4 [121]	12 [5]
6NL	8-1/4 [210]	5-7/8 [149]	22 [10]
8NL	9-1/4 [235]	6-1/2 [165]	24 [11]

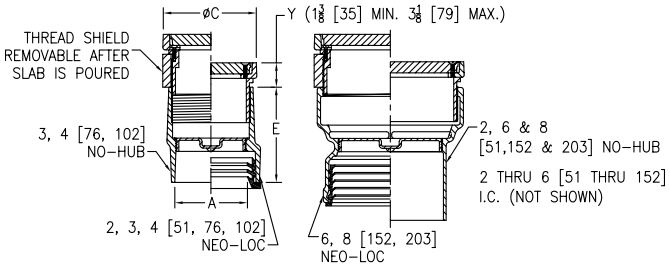

BEST SELLERS	LIST PRICE
ZN1400-2NH	626.00
ZN1400-3NH	660.00
ZN1400-3NL	660.00
Z1400-4NH	695.00
Z1400-4NH-K	695.00
ZN1400-4NH	883.00
ZN1400-4NH-BP	1,077.00
ZB1400-4NH	821.00
ZS1400-4NH-HD	POA
Z1400-4NL	695.00
Z1400-4NL-BP	889.00
ZN1400-4NL	883.00
ZB1400-4NL	821.00
ZB1400-4NL-HD	979.00
ZS1400-4NL-HD	POA
Z1400-6NL	1,210.00

PREFIXES	DESCRIPTION	A PIPE SIZE	LIST PRICE
Z1400*	Dura-Coated Cast Iron	2″	510.00
		3″	582.00
		4″	695.00
		6″	1,210.00
		8″	1,434.00
ZB1400	D.C.C.I. with Polished Bronze Light-Duty Top (Deduct 1/2″ from 'Y' Dim.)	2″	561.00
		3″	604.00
		4″	821.00
		6″	1,378.00
		8″	1,594.00
ZN1400	D.C.C.I. with Polished Nickel Bronze Light-Duty Top (Deduct 1/2″ from 'Y' Dim.)	2″	626.00
		3″	660.00
		4″	883.00
		6″	1,434.00
		8″	1,639.00
ZS1400	D.C.C.I. with Polished Stainless Steel Heavy-Duty Top (Add 3/16″ to 'Y' Dim.)	2″	POA
		3″	POA
		4″	POA
		5″	POA
		6″	POA
		8″	POA

OUTLET (SPECIFY PIPE SIZE IN INCHES AND TYPE OF OUTLET)

TYPE	DESCRIPTION	PIPE SIZE/OUTLET TYPE	E BODY HT. DIM.	ADD
IC	Inside Caulk	2IC, 3IC, 4IC, 6IC	See Chart	N/C
NH	No-Hub	2NH, 3NH, 4NH, 6NH, 8NH	See Chart	N/C
NL	Neo-Loc	2NL, 3NL, 4NL, 6NL, 8NL	See Chart	N/C

SUFFIXES			ADD
–AR	Acid Resisting Epoxy Coated Finish		351.00
–BP	Bronze Plug	2″, 3″, 4″	194.00
		6″, 8″	615.00
–CF	Carpet Flange Cover (ZB and ZN only)		286.00
–CM	Carpet Marker		80.00
–DC	Duresist Cover (Z and HD Only)		303.00
–DX	Round ZB or ZN Top with Dex-O-Tex Flange (2″ thru 4″ sizes only)		472.00
–G	Galvanized Cast Iron		223.00
–HD	Extra Heavy-Duty Veneer Top - Add 1/8″ to 'Y' Dim. (ZB and ZN only)		158.00
–K	Anchor Flange		N/C
–KC	Anchor Flange with Clamping Collar		107.00
⏲ –PC	Protective Cover		64.00
–SG	Solid Gasketed Cover		303.00
–SM	Special Marking Stamped on Top		194.00
–T	Square Top		N/C
⏲ –TC	Neo-Loc Test Cap Gasket (2″, 3″, 4″ NL Bottom Outlet Only)		24.00
–TX	Square Top Recessed for 1/8″ Tile (ZB and ZN only)		N/C
–VP	Vandal-Proof Screws		72.00
–X	Round Top Recessed for 1/8″ Tile (ZB and ZN only)		N/C
–Z	Round Top Recessed for 1-1/4″ Terrazzo (ZB and ZN only)		351.00

**Regularly furnished unless otherwise specified.*

Items designated as Best Sellers are most specified and are generally in stock for shipment.

⏲ *This symbol denotes a product that is engineered to reduce installation and rework time.*

For additional product information, please visit www.zurn.com

Z1400-BZ "LEVEL-TROL" ADJUSTABLE LEVELING FLOOR CLEANOUT

ENGINEERING SPECIFICATION

Zurn Z1400-BZ level-trol adjustable leveling floor cleanout features Dura-Coated cast iron body, gas and watertight ABS tapered thread plug, and round scoriated secured light-duty top (specify finish ZB, ZN, ZS) with additional leveling adjustment to finished floor.

PATENTED

A Pipe Size/ Outlet Type	Dimensions in inches [mm]		Approximate Weight lb [kg]
	C	E Body Height Dimensions	
No-Hub (NH)			
4NH	5-1/32 [128]	4-3/4 [121]	10 [5]
Neo-Loc (NL)			
3NL	5-1/32 [128]	4-3/4 [121]	11 [5]
4NL			12 [5]

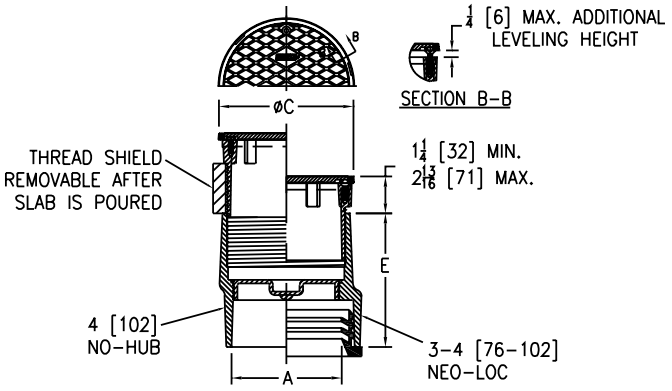

PREFIXES	DESCRIPTION	A PIPE SIZE	LIST PRICE
ZB1400-BZ	D.C.C.I. with Polished Bronze Top	3″	**604.00**
		4″	**821.00**
ZN1400-BZ	D.C.C.I. with Polished Nickel Bronze Top	3″	**660.00**
		4″	**883.00**
ZS1400-BZ	D.C.C.I. with Polished Type 304 (CF8) Stainless Steel Top	3″	**POA**
		4″	**POA**

OUTLET (SPECIFY PIPE SIZE IN INCHES AND TYPE OF OUTLET)				
TYPE	DESCRIPTION	PIPE SIZE/OUTLET TYPE	E BODY HT. DIM.	ADD
NH	No-Hub	4NH	See Chart	**N/C**
NL	Neo-Loc	3NL, 4NL	See Chart	**N/C**

SUFFIXES			ADD
–AR	Acid Resisting Epoxy Coated Finish		**351.00**
–BP	Bronze Plug	3″, 4″	**194.00**
–CM	Carpet Marker		**80.00**
–G	Galvanized Cast Iron		**223.00**
–K	Anchor Flange		**N/C**
–KC	Anchor Flange with Clamping Collar		**107.00**
–PC	Protective Cover		**64.00**
–SM	Special Marking Stamped on Top		**194.00**
–TC	Neo-Loc Test Cap Gasket (3″-4″ NL Bottom Outlet Only)		**24.00**
–VP	Vandal-Proof Screws		**72.00**

BEST SELLERS	LIST PRICE
ZN1400BZ-4NL-TC	**907.00**
ZN1400BZ-4NL-VP	**955.00**

For additional product information, please visit www.zurn.com

**Regularly furnished unless otherwise specified.*
Items designated as Best Sellers are most specified and are generally in stock for shipment.
This symbol denotes a product that is engineered to reduce installation and rework time.

Z1400-SZ "LEVEL-TROL" SQUARE ADJUSTABLE LEVELING FLOOR CLEANOUT

ENGINEERING SPECIFICATION

Zurn Z1400-SZ level-trol square adjustable leveling floor cleanout features Dura-Coated cast iron body, gas and watertight ABS tapered thread plug, and round scoriated secured light-duty top (specify finish ZB, ZN, ZS) with additional leveling adjustment to finished floor.

PATENTED

A Pipe Size/ Outlet Type	Dimensions in inches [mm]		Approximate Weight lb [kg]
	C	E Body Height Dimensions	
No-Hub (NH)			
4NH	5-1/32 [128]	4-3/4 [121]	11 [5]
Neo-Loc (NL)			
3NL	5-1/32 [128]	4-3/4 [121]	11 [5]
4NL			12 [5]

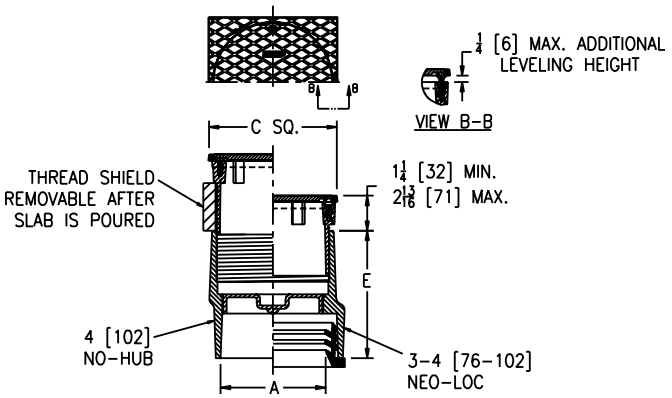

PREFIXES	DESCRIPTION	A PIPE SIZE	LIST PRICE
ZB1400-SZ	D.C.C.I. with Polished Bronze Top	3″	604.00
		4″	821.00
ZN1400-SZ	D.C.C.I. with Polished Nickel Bronze Top	3″	660.00
		4″	883.00
ZS1400-SZ	D.C.C.I. with Polished Type 304 (CF8) Stainless Steel Top	3″	POA
		4″	POA

OUTLET (SPECIFY PIPE SIZE IN INCHES AND TYPE OF OUTLET)				
TYPE	DESCRIPTION	PIPE SIZE/OUTLET TYPE	E BODY HT. DIM.	ADD
NH	No-Hub	4NH	See Chart	N/C
NL	Neo-Loc	3NL, 4NL	See Chart	N/C
SUFFIXES				**ADD**
–AR	Acid Resisting Epoxy Coated Finish			351.00
–BP	Bronze Plug		3″, 4″	194.00
–CM	Carpet Marker			80.00
–G	Galvanized Cast Iron			223.00
–K	Anchor Flange			N/C
–KC	Anchor Flange with Clamping Collar			107.00
–SM	Special Marking Stamped on Top			194.00
–TC	Neo-Loc Test Cap Gasket (3″-4″ NL Bottom Outlet Only)			24.00
–VP	Vandal-Proof Screws			72.00

BEST SELLER	LIST PRICE
ZN1400-SZ-4NL	883.00

**Regularly furnished unless otherwise specified.*

Items designated as Best Sellers are most specified and are generally in stock for shipment.

This symbol denotes a product that is engineered to reduce installation and rework time.

Z1400-K HEAVY-DUTY "LEVEL-TROL" ADJUSTABLE FLOOR CLEANOUT WITH ANCHOR FLANGE

ENGINEERING SPECIFICATION

Zurn Z1400-K level-trol adjustable floor cleanout features Dura-Coated cast iron body, anchor flange, gas and watertight ABS tapered thread plug, and round scoriated cast iron heavy-duty secured top (specify finish Z, ZB, ZN, ZS) adjustable to finished floor.

A Pipe Size/ Outlet Type	Dimensions in inches [mm]			Approximate Weight lb [kg]
	B	C	E Body Height Dimensions	
Inside Caulk (IC)				
2IC	9-1/2 [241]	6-1/8 [156]	6-7/8 [175]	18 [8]
3IC	9-1/2 [241]	6-1/8 [156]		19 [9]
4IC	11-1/2 [292]	7-1/4 [184]		20 [9]
6IC	12-1/4 [311]	9-1/4 [235]		39 [18]
No-Hub (NH)				
2NH	7-1/2 [191]	4-1/8 [105]	4-5/8 [117]	11 [5]
3NH	7-1/2 [191]	5-1/8 [130]	5-3/8 [137]	10 [5]
4NH	7-1/2 [191]	5-1/8 [130]	5-3/8 [137]	13 [6]
6NH	11-1/2 [292]	8-1/4 [210]	4-3/4 [121]	29 [13]
8NH	12-1/4 [311]	9-1/4 [235]	7-1/2 [191]	38 [17]
Neo-Loc (NL)				
2NL	7-1/2 [191]	5-1/8 [130]	5-3/8 [137]	12 [5]
3NL	7-1/2 [191]	5-1/8 [130]	5-3/8 [137]	13 [6]
4NL	7-1/2 [191]	5-1/8 [130]	5-3/8 [137]	14 [6]
6NL	11-1/2 [292]	8-1/4 [210]	5-7/8 [149]	29 [13]
8NL	12-1/4 [311]	9-1/4 [235]	6-1/2 [165]	32 [15]

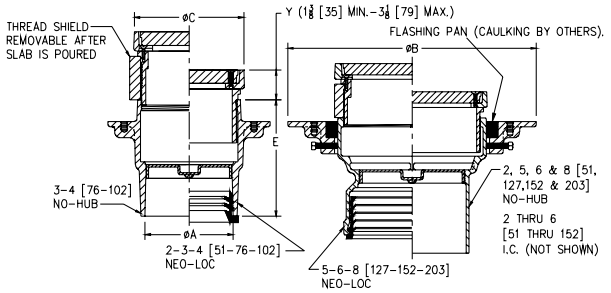

Shown with -SA Stabilizer Option

PREFIXES	DESCRIPTION	A PIPE SIZE	LIST PRICE
Z1400-K*	Dura-Coated Cast Iron	2″	**510.00**
		3″	**582.00**
		4″	**695.00**
		6″	**1,210.00**
		8″	**1,434.00**
ZB1400-K	D.C.C.I. with Polished Bronze Light-Duty Top (Deduct 1/2″ from 'Y' Dim.)	2″	**561.00**
		3″	**604.00**
		4″	**821.00**
		6″	**1,378.00**
		8″	**1,594.00**
ZN1400-K	D.C.C.I. with Polished Nickel Bronze Light-Duty Top (Deduct 1/2″ from 'Y' Dim.)	2″	**626.00**
		3″	**660.00**
		4″	**883.00**
		6″	**1,434.00**
		8″	**1,639.00**
ZS1400-K	D.C.C.I. with Polished Stainless Steel Heavy-Duty Top (Add 3/16″ to 'Y' Dim.)	2″	**POA**
		3″	**POA**
		4″	**POA**
		6″	**POA**
		8″	**POA**

OUTLET (SPECIFY PIPE SIZE IN INCHES AND TYPE OF OUTLET)

TYPE	DESCRIPTION	PIPE SIZE/OUTLET TYPE	E BODY HT. DIM.	ADD
IC	Inside Caulk	2IC, 3IC, 4IC, 6IC	See Chart	**N/C**
NH	No-Hub	2NH, 3NH, 4NH, 6NH, 8NH	See Chart	**N/C**
NL	Neo-Loc	2NL, 3NL, 4NL, 6NL, 8NL	See Chart	**N/C**

SUFFIXES			ADD
–AR	Acid Resisting Epoxy Coated Finish		**351.00**
–BP	Bronze Plug	2″, 3″, 4″	**194.00**
		6″, 8″	**615.00**
–C	Clamp Collar		**107.00**
–CF	Carpet Flange Cover (ZB and ZN only)		**286.00**
–CM	Carpet Marker		**80.00**
–DC	Duresist Cover		**303.00**
–DX	Round ZB or ZN Top with Dex-O-Tex Flange (2″ thru 4″ sizes only)		**472.00**
–G	Galvanized Cast Iron		**223.00**
–HD	Heavy-Duty Veneer Top - Add 1/8″ to 'Y' Dim. (ZB and ZN only)		**158.00**
⏲ **–SA**	Stabilizer Assembly (See Z1035)		**N/C**
–SG	Solid Gasketed Cover		**303.00**
–SM	Special Marking Stamped on Top		**194.00**
–T	Square Top		**N/C**
⏲ **–TC**	Neo-Loc Test Cap Gasket (2″-4″ NL Bottom Outlet Only)		**24.00**
–TX	Square Top Recessed for 1/8″ Tile (ZB and ZN only)		**N/C**
–VP	Vandal-Proof Screws		**72.00**
–X	Round Top Recessed for 1/8″ Tile (ZB and ZN only)		**N/C**
–Z	Round Top Recessed for 1-1/4″ Terrazzo (ZB and ZN only)		**351.00**

BEST SELLERS	LIST PRICE
ZN1400-K-4NH	**883.00**
ZN1400-K-4NL-BP	**1,077.00**
ZN1400-K-6NH	**1,434.00**

For additional product information, please visit www.zurn.com

**Regularly furnished unless otherwise specified.*

Items designated as Best Sellers are most specified and are generally in stock for shipment.

⏲ *This symbol denotes a product that is engineered to reduce installation and rework time.*

Z1402 HEAVY-DUTY NON-ADJUSTABLE FLOOR CLEANOUT

ENGINEERING SPECIFICATION

Zurn Z1402 tuf-top non-adjustable floor cleanout features Dura-Coated cast iron body, gas and watertight ABS tapered thread plug, and round scoriated cast iron heavy-duty secured cover and frame.

A Pipe Size/ Outlet Type	Dimensions in inches [mm]		Approximate Weight lb [kg]
	C	E Body Height Dimensions	
Neo-Loc (NL)			
2NL	4-1/8 [105]	2-3/4 [70]	5 [2]
3NL	5-1/8 [130]		8 [4]
4NL	6-1/8 [156]		10 [5]
5NL	7-1/4 [184]	3-5/8 [92]	15 [7]
6NL	8-1/4 [210]		17 [8]
8NL	9-1/4 [235]		22 [10]
No-Hub (NH)			
3NH	4-1/8 [105]	2-3/4 [70]	5 [2]
4NH	5-1/8 [130]		8 [4]
6NH	7-1/4 [184]	3-5/8 [92]	15 [7]
8NH	9-1/4 [235]		22 [10]

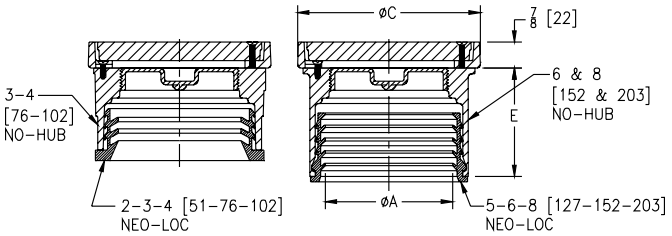

PREFIXES	DESCRIPTION	A PIPE SIZE	LIST PRICE
Z1402*	Dura-Coated Cast Iron	2″	**343.00**
		3″	**455.00**
		4″	**455.00**
		5″	**626.00**
		6″	**626.00**
		8″	**1,230.00**
ZB1402	D.C.C.I. with Polished Bronze Light-Duty Top (Deduct 1/2″ from 7/8″ Dim.)	2″	**417.00**
		3″	**582.00**
		4″	**582.00**
		5″	**765.00**
		6″	**765.00**
		8″	**1,379.00**
ZN1402	D.C.C.I. with Polished Nickel Bronze Light-Duty Top (Deduct 1/2″ from 7/8″ Dim.)	2″	**433.00**
		3″	**645.00**
		4″	**645.00**
		5″	**817.00**
		6″	**817.00**
		8″	**1,441.00**
ZS1402	D.C.C.I. with Polished Stainless Steel Heavy-Duty Top (Add 3/16″ to 7/8″ Dim.)	2″	**POA**
		3″	**POA**
		4″	**POA**
		5″	**POA**
		6″	**POA**
		8″	**POA**

OUTLET (SPECIFY PIPE SIZE IN INCHES AND TYPE OF OUTLET)				
TYPE	DESCRIPTION	PIPE SIZE/OUTLET TYPE	E BODY HT. DIM.	ADD
NH	No-Hub	3NH, 4NH, 6NH, 8NH	See Chart	**N/C**
NL	Neo-Loc	2NL, 3NL, 4NL, 5NL, 6NL, 8NL	See Chart	**N/C**

SUFFIXES			ADD
–BP	Bronze Plug	2″, 3″, 4″, 5″	**194.00**
		6″, 8″	**615.00**
–CM	Carpet Marker		**80.00**
–DX	Round ZB or ZN Top with Dex-O-Tex Flange (2″, 3″, 4″, 5″ sizes only)		**472.00**
–G	Galvanized Cast Iron		**158.00**
–HD	Heavy-Duty Veneer Top - Add 1/8″ to 7/8″ Dim. (ZB and ZN only)		**158.00**
–T	Square Top		**N/C**
◷ **–TC**	Neo-Loc Test Cap Gasket (2″, 3″, 4″ NL Bottom Outlet Only)		**24.00**
–VP	Vandal-Proof Screws		**72.00**

BEST SELLERS	LIST PRICE
Z1402-4NL	**455.00**
ZN1402-4NL-HD	**803.00**
Z1402-6NL	**626.00**
ZN1402-6NH-BP	**1,432.00**
ZN1402-6NL	**817.00**
Z1402-8NH	**1,230.00**

**Regularly furnished unless otherwise specified.*

Items designated as Best Sellers are most specified and are generally in stock for shipment.

◷ This symbol denotes a product that is engineered to reduce installation and rework time.

For additional product information, please visit www.zurn.com

Z1404 HEAVY-DUTY FLOOR ACCESS HOUSING

ENGINEERING SPECIFICATION

Zurn Z1404 floor access housing features Dura-Coated cast iron with round frame and scoriated cast iron heavy-duty secured cover complete with adjusting setscrews.

A Pipe Size/Outlet Type	C inches [mm]	Approximate Weight lb [kg]
Slip Joint (SJ)		
3SJ	6-1/8 [156]	3 [1]
4SJ	7-1/4 [184]	4 [2]
6SJ	9-1/4 [235]	8 [4]

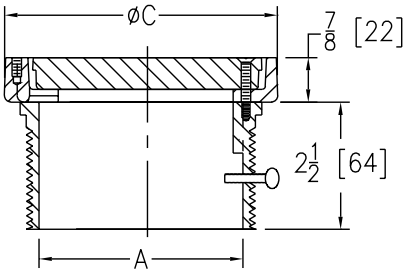

PREFIXES	DESCRIPTION	A PIPE SIZE	LIST PRICE
Z1404*	Dura-Coated Cast Iron	3″, 4″	420.00
		6″	556.00
ZN1404	D.C.C.I. with Polished Nickel Bronze Light-Duty Top (Deduct 1/2″ from 7/8″ Dim.)	3″, 4″	582.00
		6″	742.00
ZS1404	D.C.C.I. with Polished Stainless Steel Heavy-Duty Top (Add 3/16″ to 7/8″ Dim.)	3″, 4″	POA
		6″	POA

OUTLET (SPECIFY PIPE SIZE IN INCHES AND TYPE OF OUTLET)			
TYPE	DESCRIPTION	PIPE SIZE/OUTLET TYPE	ADD
SJ	Slip Joint	3SJ, 4SJ, 6SJ	N/C

SUFFIXES		ADD
-HD	Heavy-Duty Veneer Top (Add 1/8″ to 2-1/2″ Dim. for ZN only)	158.00
-VP	Vandal-Proof Screws	98.00

BEST SELLERS	LIST PRICE
Z1404-4	420.00
ZN1404-4	582.00
Z1404-6	556.00
ZN1404-6	742.00

Z1406 HEAVY-DUTY ADJUSTABLE SPIGOT CLEANOUT

ENGINEERING SPECIFICATION

Zurn Z1406 adjustable floor cleanout uses spigot connection for caulking into hub. Features Dura-Coated cast iron body, gas and watertight ABS plug, and cast iron housing with round scoriated secured cast iron heavy-duty cover adjustable to finished floor.

A Pipe Size/ Outlet Type	B N.P.T.	Dimensions in inches [mm]			Approximate Weight lb [kg]
		C	Y Min.	Y Max.	
Spigot (SP)					
3SP	2	6-1/8 [156]	7/8 [22]	2 [51]	11 [5]
4SP	3-1/2	7-1/4 [184]			15 [7]
6SP	3-1/2	9-1/4 [235]			23 [10]

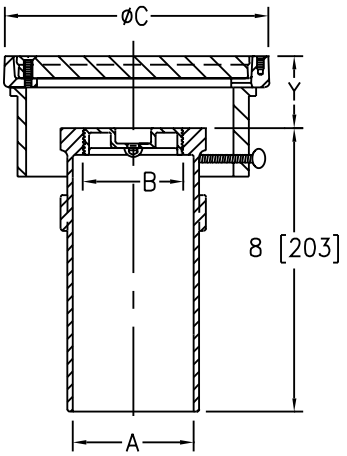

PREFIXES	DESCRIPTION	A PIPE SIZE	LIST PRICE
Z1406*	Dura-Coated Cast Iron	3″	489.00
		4″	597.00
		6″	1,139.00
ZN1406	D.C.C.I. with Polished Nickel Bronze Light-Duty Top (Deduct 1/2″ from 'Y' Dim.)	3″	765.00
		4″	883.00
		6″	1,758.00
ZS1406	D.C.C.I. with Polished Stainless Steel Heavy-Duty Top (Add 3/16″ to 'Y' Dim.)	3″	POA
		4″	POA
		6″	POA

OUTLET (SPECIFY PIPE SIZE IN INCHES AND TYPE OF OUTLET)			
TYPE	DESCRIPTION	PIPE SIZE/OUTLET TYPE	ADD
SP	Spigot	3SP, 4SP, 6SP	N/C

SUFFIXES			ADD
–AR	Acid Resisting Epoxy Coated Finish		351.00
–BP	Bronze Plug	3″, 4″	194.00
		6″	615.00
–CF	Carpet Flange (ZN only)		286.00
–CM	Carpet Marker		80.00
–DC	Duresist Cover		303.00
–DX	Round Top with Dex-O-Tex Flange (2″ thru 4″ sizes only)		472.00
–G	Galvanized Cast Iron		223.00
–HD	Heavy-Duty Veneer Top (Add 1/8″ to 'Y' Dim. for ZN only)		158.00
–SG	Solid Gasketed Cover		303.00
–SM	Special Marking Stamped on Top		194.00
–T	Square Top		N/C
–TX	Square Top Recessed for 1/8″ Tile (ZN only)		N/C
–VP	Vandal-Proof Screws		72.00
–X	Round Top Recessed for 1/8″ Tile (ZN only)		N/C

BEST SELLER	LIST PRICE
ZN1406-4	883.00

For additional product information, please visit www.zurn.com

**Regularly furnished unless otherwise specified.*

Items designated as Best Sellers are most specified and are generally in stock for shipment.

This symbol denotes a product that is engineered to reduce installation and rework time.

Z1440 CLEANOUT FERRULE WITH PLUG

ENGINEERING SPECIFICATION

Zurn Z1440 cleanout features Dura-Coated cast iron body with gas and watertight ABS tapered thread plug.

A Pipe Size/Outlet Type	E Body Height Dimensions inches [mm]	Approximate Weight lb [kg]
No-Hub (NH)		
2NH	2-1/2 [64]	2 [1]
3NH	2-3/4 [70]	4 [2]
4NH	3 [76]	5 [2]
6NH	3 [76]	8 [4]
8NH	3-1/2 [89]	13 [6]

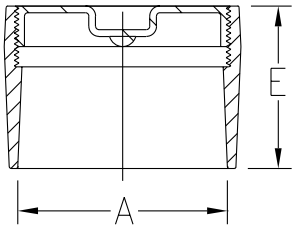

PREFIXES	DESCRIPTION	A PIPE SIZE	LIST PRICE
Z1440*	D.C.C.I. and ABS Plug	2″	**98.00**
		3″	**150.00**
		4″	**206.00**
		6″	**420.00**
		8″	**781.00**

OUTLET (SPECIFY PIPE SIZE IN INCHES AND TYPE OF OUTLET)				
TYPE	DESCRIPTION	PIPE SIZE/OUTLET TYPE	E BODY HT. DIM.	ADD
NH	No-Hub	2NH, 3NH, 4NH, 6NH, 8NH	See Chart	**N/C**
SUFFIXES				ADD
–BP	Bronze Plug		2″, 3″, 4″	**194.00**
			6″, 8″	**615.00**
–G	Galvanized Cast Iron			**158.00**
BEST SELLERS				LIST PRICE
Z1440-4NH				**206.00**
Z1440-4NH-BP				**400.00**
Z1440-6NH-BP				**1,035.00**

**Regularly furnished unless otherwise specified.*

Items designated as Best Sellers are most specified and are generally in stock for shipment.

This symbol denotes a product that is engineered to reduce installation and rework time.

For additional product information, please visit www.zurn.com

Z1445 CLEANOUT TEE

ENGINEERING SPECIFICATION

Zurn Z1445 cleanout tee features Dura-Coated cast iron body with gas and watertight ABS tapered thread plug.

A Pipe Size/ Outlet Type	Dimensions in inches [mm]			Approximate Weight lb [kg]
	B	C	D	
No Hub (NH)				
2NH	6-3/8 [162]	3-3/16 [81]	1-3/4 [44]	8 [4]
3NH	7-3/4 [197]	3-7/8 [98]	2-1/2 [64]	15 [7]
4NH	8-7/8 [225]	4-7/16 [113]	3 [76]	16 [7]
6NH	12-1/2 [317]	6-1/4 [159]	4-5/16 [109]	35 [16]
8NH	17 [432]	8-1/2 [216]	6-3/8 [162]	49 [22]

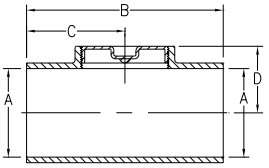

PREFIXES	DESCRIPTION	A PIPE SIZE	LIST PRICE
Z1445*	Dura-Coated Cast Iron	2″	228.00
		3″	285.00
		4″	442.00
		6″	1,254.00
		8″	1,558.00

OUTLET (SPECIFY PIPE SIZE IN INCHES AND TYPE OF OUTLET)				
TYPE	DESCRIPTION	PIPE SIZE/OUTLET TYPE	E BODY HT. DIM.	ADD
NH	No-Hub	2NH, 3NH, 4NH, 6NH, 8NH	See Chart	N/C
SUFFIXES				ADD
–BP	Bronze Plug	2″, 3″, 4″		194.00
		6″, 8″		615.00
–G	Galvanized Cast Iron			223.00

Z1446 CLEANOUT WITH ROUND WALL ACCESS COVER

ENGINEERING SPECIFICATION

ZURN Z1446 Cleanout Tee, Dura-Coated cast iron body, gas and watertight ABS tapered thread plug, and round, smooth stainless steel wall access cover with securing screw.

A Pipe Size/ Outlet Type	Dimensions in Inches [mm]					App. Wt. Lbs. [Kg]
	B	C	D	F	G	
No Hub (NH)						
2NH	6-3/8 [162]	3-3/16 [81]	1-3/4 [44]	7 [178]	6 [152]	11 [5]
3NH	7-3/4 [197]	3-7/8 [98]	2-1/2 [64]			18 [8]
4NH	8-7/8 [225]	4-7/16 [113]	3 [76]	9 [229]	8 [203]	20 [9]
5NH	-	-	-			21 [10]
6NH	12-1/2 [317]	6-1/4 [159]	4-5/16 [109]			31 [14]
Hub x Spigot (HB x SP)						
2HB x SP	10 [254]	4-1/2 [114]	2-3/4 [70]	7 [178]	6 [152]	11 [5]
3HB x SP	12 [305]	5-3/4 [146]	3 [76]			18 [8]
4HB x SP	12 [305]	5-3/4 [146]	3-1/2 [89]	9 [229]	8 [203]	20 [9]
5HB x SP	13 [330]	6-1/4 [159]	4 [102]			21 [10]
6HB x SP	14 [356]	6-3/4 [171]	4-1/2 [114]			31 [14]

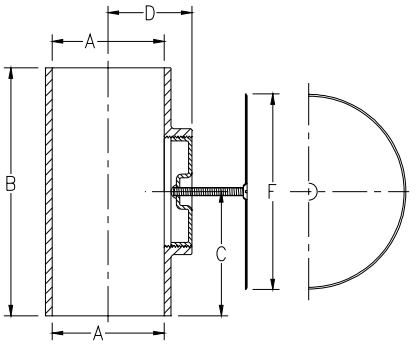

PREFIXES	DESCRIPTION	A PIPE SIZE	LIST PRICE
Z1446*	D.C.C.I. with Polished Stainless Steel Cover	2″	365.00
		3″	417.00
		4″	615.00
		5″	995.00
		6″	1,558.00
		8″	1,868.00
ZB1446	D.C.C.I. with Polished Bronze Cover	2″	323.00
		3″	376.00
		4″	569.00
		5″	957.00
		6″	1,518.00
		8″	1,829.00

OUTLET (SPECIFY PIPE SIZE IN INCHES AND TYPE OF OUTLET)				
TYPE	DESCRIPTION	PIPE SIZE/OUTLET TYPE	E BODY HT. DIM.	ADD
NH	No-Hub	2NH, 3NH, 4NH, 6NH, 8NH	See Chart	N/C
HB x SP	Hub x Spigot	2HB x SP, 3HB x SP, 4HB x SP, 5HB x SP, 6HB x SP, 8HB x SP	See Chart	N/C
SUFFIXES			A PIPE SIZE	ADD
–A	Raised Head Plug			N/C
–BP	Bronze Plug		2″, 3″, 4″, 5″	194.00
			6″, 8″	615.00
–G	Galvanized Cast Iron			224.00
–SL	Screws Longer Than 3-1/2″ (Per Inch)			20.00
–VP	Vandal-Proof Screw			72.00

For additional product information, please visit www.zurn.com

**Regularly furnished unless otherwise specified.*

Items designated as Best Sellers are most specified and are generally in stock for shipment.

This symbol denotes a product that is engineered to reduce installation and rework time.

Z1449 CLEANOUT FERRULE WITH PLUG

ENGINEERING SPECIFICATION

Zurn Z1449 cleanout ferrule features Dura-Coated cast iron body with gas and watertight ABS countersunk plug.

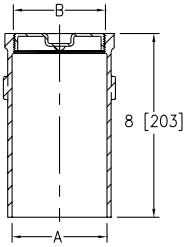

A Pipe Size/Outlet Type	B N.P.T.	Approximate Weight lb [kg]
Spigot (SP)		
3SP	2	6 [3]
4SP	3-1/2	8 [4]
6SP	3-1/2	13 [6]

PREFIXES	DESCRIPTION		A PIPE SIZE	LIST PRICE
Z1449*	Dura-Coated Cast Iron with ABS Plug		3″	235.00
			4″	245.00
			6″	633.00
OUTLET (SPECIFY PIPE SIZE IN INCHES AND TYPE OF OUTLET)				
TYPE	DESCRIPTION	PIPE SIZE/OUTLET TYPE	E BODY HT. DIM.	ADD
SP	Spigot	3SP, 4SP, 6SP	See Chart	N/C
SUFFIXES				ADD
–A	Raised Head Plug			N/C
–BP	Bronze Plug		3″, 4″	194.00
			6″	615.00
–G	Galvanized Cast Iron			158.00
BEST SELLER				LIST PRICE
Z1449-4SP				245.00

Z1454 ADJUSTABLE FLOOR CLEANOUT WITH FLASHING FLANGE

ENGINEERING SPECIFICATION

Zurn Z1454 adjustable floor cleanout features Dura-Coated cast iron body, gas and watertight brass tapered thread plug, and round scoriated Dura-Coated cast iron adjustable top complete with membrane flashing flange.

A Pipe Size/Outlet Type	Approximate Weight lb [kg]
Inside Caulk (IC)	
2IC, 3IC	33 [15]
4IC	34 [15]
Threaded (IP)	
2IP, 3IP	33 [15]
4IP	34 [15]

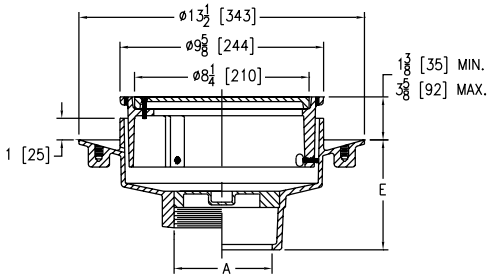

PREFIXES	DESCRIPTION		A PIPE SIZE	LIST PRICE
Z1454*	Dura-Coated Cast Iron		2″, 3″	1,215.00
			4″	1,254.00
ZN1454	D.C.C.I. with Polished Nickel Bronze Top (Add 3/16″ to 1-3/8″ min. - 3-5/8″ max. dim.)		2″, 3″	1,617.00
			4″	1,657.00
OUTLET (SPECIFY PIPE SIZE IN INCHES AND TYPE OF OUTLET)				
TYPE	DESCRIPTION	PIPE SIZE/OUTLET TYPE	E BODY HT. DIM.	ADD
IC	Inside Caulk	2IC, 3IC, 4IC	5-1/4″	N/C
IP	Threaded	2IP, 3IP, 4IP	4-1/4″	N/C
SUFFIXES				ADD
–C	Clamp Collar			N/C
–G	Galvanized Cast Iron			445.00
–VP	Vandal-Proof Secured Top			150.00
Best Seller				List Price
Z1454-4IP				1,254.00

*Regularly furnished unless otherwise specified.

Items designated as Best Sellers are most specified and are generally in stock for shipment.

This symbol denotes a product that is engineered to reduce installation and rework time.

For additional product information, please visit www.zurn.com

Z1456 DECK CLEANOUT

ENGINEERING SPECIFICATION

Zurn ZANB1456 deck cleanout features nickel bronze body with scoriated deck plug and O-ring seal.

A Pipe Size/ Outlet Type	Dimensions in inches [mm]		Approximate Weight lb [kg]
	B	C	
Inside Caulk (IC)			
3IC	5 [127]	6 [152]	4 [2]
4IC	6 [152]	7-3/8 [187]	6 [3]
6IC	8 [203]	9-3/8 [238]	12 [5]
Threaded (IP)			
3IP	3-1/2 [89]	4-7/8 [124]	4 [2]
4IP	4-1/2 [114]	6 [152]	6 [3]
6IP	7-7/8 [200]	9-3/8 [238]	12 [5]
8IP	9-7/8 [251]	11 [279]	16 [7]

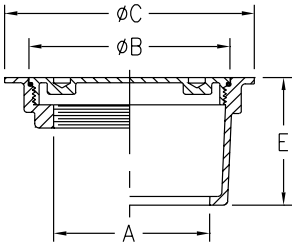

PREFIXES	DESCRIPTION	A PIPE SIZE	LIST PRICE
ZANB1456*	Nickel Bronze with Polished Scoriated Top	3″	**678.00**
		4″	**756.00**
		6″	**1,298.00**
		8″	**2,530.00**

OUTLET (SPECIFY PIPE SIZE IN INCHES AND TYPE OF OUTLET.

TYPE	DESCRIPTION	PIPE SIZE/OUTLET TYPE	E BODY HT. DIM.	ADD
IC	Inside Caulk	3IC, 4IC	3-1/4″	**N/C**
		6IC	3-1/2″	**N/C**
IP	Threaded	3IP, 4IP	1-1/2″	**N/C**
		6IP	1-5/8″	**N/C**
		8IP	2″	**N/C**

SUFFIXES		ADD
–SW	Extra Spanner Wrench	**150.00**

BEST SELLER	LIST PRICE
ZANB1456-4IC	**756.00**

Z1457 FLOOR ACCESS COVER

ENGINEERING SPECIFICATION

Zurn ZANB1457 floor access cover features nickel bronze body with round, scoriated secured cover.

A Pipe Size/ Outlet Type	Dimensions in inches [mm]		Approximate Weight lb [kg]
	B	C	
Threaded (IP)			
2IP	4-1/2 [114]	5-1/2 [140]	4 [2]
3IP	4-1/2 [114]	5-1/2 [140]	4 [2]
4IP	5-3/4 [146]	6-3/4 [171]	5 [2]
5IP	7 [178]	8 [203]	6 [3]
6IP	8-1/4 [210]	9-1/2 [241]	8 [4]
8IP	10-1/4 [260]	11-1/2 [292]	12 [5]

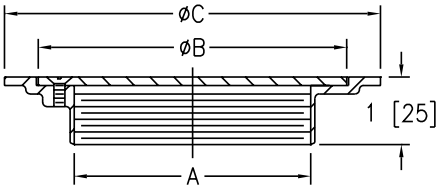

PREFIXES	DESCRIPTION	A PIPE SIZE	LIST PRICE
ZANB1457*	Nickel Bronze with Polished Scoriated Cover	2″	**455.00**
		3″	**1,208.00**
		4″	**1,367.00**
		5″	**1,785.00**
		6″	**1,051.00**
		8″	**2,857.00**
ZAB1457	Bronze with Polished Scoriated Cover	2″	**412.00**
		3″	**561.00**
		4″	**1,208.00**
		5″	**850.00**
		6″	**939.00**
		8″	**1,355.00**

OUTLET (SPECIFY PIPE SIZE IN INCHES AND TYPE OF OUTLET.

TYPE	DESCRIPTION	PIPE SIZE/OUTLET TYPE	E BODY HT. DIM.	ADD
IP	Threaded	2IP, 3IP, 4IP, 5IP, 6IP, 8IP	See Chart	**N/C**

SUFFIXES		ADD
–VP	Vandal-Proof Screws	**72.00**

SEE LEGACY ADDENDUM ON PAGE 369 FOR MORE INFORMATION

Z1460 SQUARE WALL ACCESS PANEL

ENGINEERING SPECIFICATION

Zurn ZANB1460 square wall access panel and frame features smooth, stainless steel panel secured to nickel bronze frame, set flush to finished wall plane, and securing lugs.

Product Designation	Dimensions in inches [mm]		Approximate Weight lb [kg]
	A Frame Size	C Opening Size	
-7	7 x 7 [178]	6 x 6 [152]	3 [1]
-9	9 x 9 [229]	8 x 8 [203]	5 [2]
-10	10 x 10 [254]	9 x 9 [229]	7 [3]
-11	11 x 11 [279]	10 x 10 [254]	10 [5]

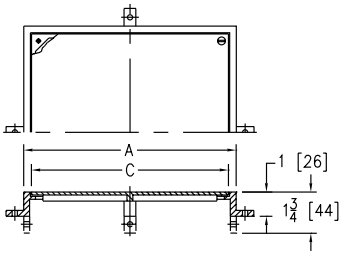

PREFIXES	DESCRIPTION	PRODUCT DESIG.	A FRAME SIZE	LIST PRICE
ZANB1460*	Nickel Bronze with Polished Scoriated Cover	–7	7″ x 7″	604.00
		–9	9″ x 9″	885.00
		–10	10″ x 10″	957.00
		–11	11″ x 11″	1,032.00
ZAB1460	Bronze with Polished Scoriated Cover	–7	7″ x 7″	527.00
		–9	9″ x 9″	775.00
		–10	10″ x 10″	827.00
		–11	11″ x 11″	923.00
SUFFIXES				**ADD**
–SC	Scoriated Cover			N/C
–VP	Vandal-Proof Screws			72.00
BEST SELLERS				**LIST PRICE**
ZANB1460-10-SC				957.00
ZANB1460-11				1,032.00
ZANB1460-7				604.00

Z1461 SQUARE HINGED ACCESS PANEL

ENGINEERING SPECIFICATION

Zurn Z1461 square hinged access panel features Dura-Coated cast iron, secured access panel, and frame with anchor lugs. Set flush with wall or floor for light-duty applications.

Product Designation	Dimensions in inches [mm]		Approximate Weight lb [kg]
	A Frame Size	C	
-8	8 x 8 [203]	6 [152]	5 [2]
-10	10 x 10 [254]	7 [178]	7 [3]
-12	12 x 12 [305]	10 [254]	11 [5]
-14	14 x 14 [356]	12-1/2 [317]	15 [7]

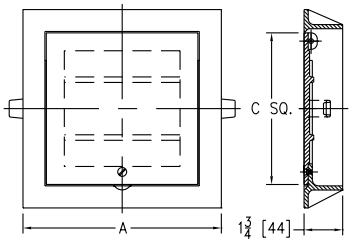

PREFIXES	DESCRIPTION	PRODUCT DESIG.	A FRAME SIZE	LIST PRICE
Z1461*	Dura-Coated Cast Iron with Scoriated Cover	–12	12″ x 12″	756.00
ZAB1461	Bronze with Polished Scoriated Cover	–8	8″ x 8″	719.00
		–10	10″ x 10″	1,032.00
		–12	12″ x 12″	1,254.00
ZANB1461	Nickel Bronze with Polished Scoriated Cover	–10	10″ x 10″	1,169.00
		–12	12″ x 12″	1,379.00
		–14	14″ x 14″	2,384.00
SUFFIXES				**ADD**
–VP	Vandal-Proof Screws			72.00
BEST SELLER				**LIST PRICE**
ZANB1461-14-VP				2,456.00

**Regularly furnished unless otherwise specified.*

Items designated as Best Sellers are most specified and are generally in stock for shipment.

This symbol denotes a product that is engineered to reduce installation and rework time.

For additional product information, please visit www.zurn.com

Z1462 SECURED WALL ACCESS PANEL

ENGINEERING SPECIFICATION

Zurn ZANB1462 secured wall access panel features square, smooth nickel bronze panel, frame with beveled edge, and anchor lugs for over wall installation.

Product Designation	Dimensions in inches [mm]				Approximate Weight lb [kg]
	A Square	B Square	C Square	D	
-6	5-15/16 [151]	7-1/2 [191]	6-1/2 [165]	1-1/4 [32]	3 [1]
-8	7-1/4 [184]	9-3/4 [248]	7-5/8 [194]	1-5/16 [33]	5 [2]
-10	9-3/8 [238]	11-7/8 [302]	9-3/4 [248]	1-5/16 [33]	7 [3]
-12	11-3/8 [289]	13-7/8 [352]	11-3/4 [298]	1-5/16 [33]	11 [5]

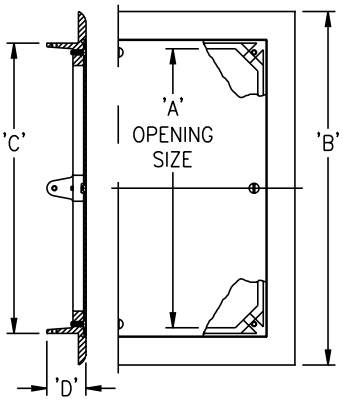

PREFIXES	DESCRIPTION	PRODUCT DESIG.	LIST PRICE
ZANB1462*	Nickel Bronze with Polished Cover	–6	**604.00**
		–8	**883.00**
		–10	**957.00**
		–12	**1,032.00**
SUFFIXES			**ADD**
–VP	Vandal-Proof Screws		**72.00**
BEST SELLER			**LIST PRICE**
ZANB1462-8			**883.00**

Z1463 ROUND SCORIATED ACCESS COVER

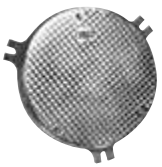

ENGINEERING SPECIFICATION

Zurn ZANB1463 features access panel and frame, round, scoriated, nickel bronze panel secured to frame, set flush to finished wall plane or floor, and anchor lugs.

Product Designation	Dimensions in inches [mm]				Approximate Weight lb [kg]
	Nominal Pipe Size	B	C	D	
-7	2 [51], 3 [76], 4 [102]	6-5/8 [168]	3/4 [19]	7-1/2 [191]	6 [3]
-11	5 [127], 6 [152], 8 [203]	10-3/4 [273]	1 [25]	11-7/8 [302]	12 [5]

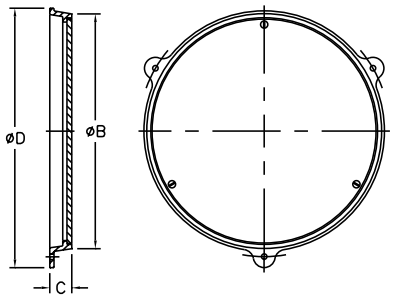

PREFIXES	DESCRIPTION	A PIPE SIZE	LIST PRICE
ZANB1463*	Nickel Bronze with Polished Scoriated Cover	2", 3", 4"	**351.00**
		5", 6", 8"	**883.00**
ZAB1463	Bronze with Polished Scoriated Cover	2", 3", 4"	**323.00**
		5", 6", 8"	**775.00**
SUFFIXES			**ADD**
–VP	Vandal-Proof Screws		**72.00**
BEST SELLERS			**LIST PRICE**
ZANB1463-11			**883.00**
ZANB1463-7			**351.00**

SEE LEGACY ADDENDUM ON PAGE 369 FOR MORE INFORMATION

For additional product information, please visit www.zurn.com

**Regularly furnished unless otherwise specified.*
Items designated as Best Sellers are most specified and are generally in stock for shipment.
This symbol denotes a product that is engineered to reduce installation and rework time.

Z1464 WATER SUPPLY CONTROL BOX ASSEMBLY

ENGINEERING SPECIFICATION

Zurn ZS1464 water supply control box assembly features 18-8 Type 304 stainless steel, cylinder lock and hinged cover, bronze control valves, screwdriver stops, and atmospheric type vacuum breaker.

A Opening Size inches [mm]	Approximate Weight lb [kg]
8-1/2 [216] x 8-1/2 [216]	17 [8]

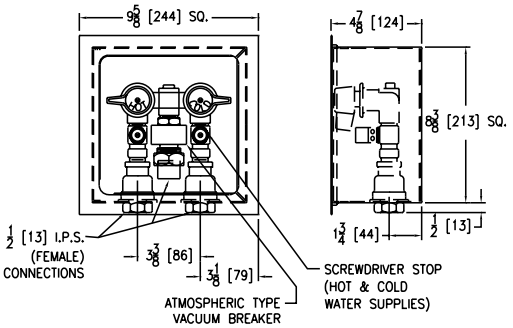

PREFIXES	DESCRIPTION	A OPENING SIZE	LIST PRICE
ZS1464*	Type 304 Stainless Steel	8-1/2″ x 8-1/2″	**5,330.00**
SUFFIXES			**DEDUCT**
–LM	Less Internal Mixing Valve Assembly		**-1,576.00**
BEST SELLER			**LIST PRICE**
ZS1464			**5,330.00**

Z1468 ACCESS COVER AND PLUG

ENGINEERING SPECIFICATION

Zurn ZS1468 round stainless steel wall access cover comes complete with securing screw and bronze raised hex head plug.

Product Designation	Dimensions in inches [mm]		Approximate Weight lb [kg]
	A Pipe Size	C	
-1.25	1-1/4 [32]	4 [102]	4 [2]
-1.5	1-1/2 [38]		
-2	2 [51]	5 [127]	5 [2]
-2.5	2-1/2 [64]		
-3	3 [76]		
-3.5	3-1/2 [89]		6 [3]
-4	4 [102]	7 [178]	8 [4]
-5	5 [127]		11 [5]
-6	6 [152]	9 [229]	14 [6]
-8	8 [203]	11 [279]	25 [11]

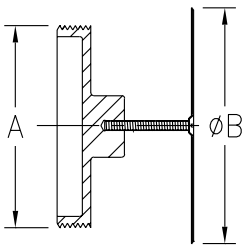

PREFIXES	DESCRIPTION	A PIPE SIZE	LIST PRICE
ZS1468*	Bronze with Stainless Steel Cover	1-1/4″, 1-1/2″	**181.00**
		2″	**194.00**
		2-1/2″	**206.00**
		3″	**235.00**
		3-1/2″	**292.00**
		4″	**306.00**
		5″	**433.00**
		6″	**660.00**
		8″	**1,195.00**
ZAB1468	Bronze Plug with Polished Bronze Cover	1-1/4″, 1-1/2″	**140.00**
		2″	**150.00**
		2-1/2″	**165.00**
		3″	**194.00**
		3-1/2″	**257.00**
		4″	**267.00**
		5″	**385.00**
		6″	**618.00**
		8″	**1,154.00**
SUFFIXES			**ADD**
–SL	Screws Longer Than 3-1/2″ (Per Inch)		**20.00**
–VP	Vandal-Proof Screw		**72.00**
BEST SELLERS			**LIST PRICE**
ZS1468-2			**194.00**
ZS1468-3			**235.00**
ZS1468-4			**306.00**
ZS1468-4-VP			**378.00**

**Regularly furnished unless otherwise specified.*

Items designated as Best Sellers are most specified and are generally in stock for shipment.

This symbol denotes a product that is engineered to reduce installation and rework time.

For additional product information, please visit www.zurn.com

Z1469 ROUND ACCESS COVER

ENGINEERING SPECIFICATION

Zurn ZS1469 round stainless steel access cover comes complete with securing screw.

Product Designation	Dimensions in inches [mm]		Approximate Weight lb [kg]
	A Cover Diameter	Nominal Pipe Size	
-4	4 [102]	2 [51], 3 [76], 3-1/2 [89]	1 [0.5]
-5	5 [127]	2 [51], 3 [76], 3-1/2 [89]	1 [0.5]
-7	7 [178]	4 [102], 5 [127]	2 [1]
-9	9 [229]	6 [152]	3 [1]
-11	11 [279]	8 [203]	4 [2]

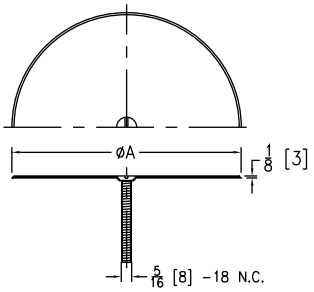

PREFIXES	DESCRIPTION	A PIPE SIZE	LIST PRICE
ZS1469*	Type 304 Stainless Steel Polished Cover	2″, 3″, 3-1/2″	140.00
		4″, 5″	171.00
		6″	306.00
		8″	476.00
ZAB1469	Bronze Polished Cover	2″, 3″, 3-1/2″	98.00
		4″, 5″	129.00
		6″	267.00
		8″	436.00
SUFFIXES			**ADD**
–SL	Screws Longer Than 3-1/2″ (Per Inch)		20.00
–VP	Vandal-Proof Screw		72.00
BEST SELLERS			**LIST PRICE**
ZS1469-4			140.00
ZS1469-5			140.00
ZS1469-7			171.00
ZS1469-9			306.00
ZS1469-11			476.00

SEE LEGACY ADDENDUM ON PAGE 369 FOR MORE INFORMATION

Z1470 BRONZE CLEANOUT PLUG

ENGINEERING SPECIFICATION

Zurn ZARB1470 bronze cleanout plug is a countersunk, ABS tapered thread plug.

Product Designation	Dimensions in inches [mm]		Approximate Weight lb [kg]
	A Pipe Size	E Body Height Dimensions	
-1.25	1-1/4 [32]	9/16 [14]	.5 [0.23]
-1.5	1-1/2 [38]	5/8 [16]	.5 [0.23]
-2	2 [51]	1/2 [13]	.75 [0.34]
-2.5	2-1/2 [64]	3/4 [19]	.75 [0.34]
-3	3 [76]	3/4 [19]	1 [0.5]
-3.5	3-1/2 [89]	3/4 [19]	1 [0.5]
-4	4 [102]	3/4 [19]	1.5 [.06]
-5	5 [127]	3/4 [19]	1.5 [.06]
-6	6 [152]	3/4 [19]	3 [1]
-8	8 [203]	3/4 [19]	7 [3]

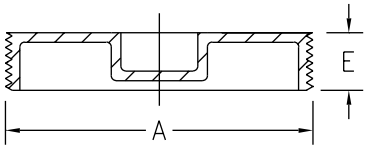

PREFIXES	DESCRIPTION	A PIPE SIZE	LIST PRICE
ZARB1470*	Plain Bronze	1-1/4″, 1-1/2″	47.00
		2″	107.00
		2-1/2″	135.00
		3″	185.00
		3-1/2″	158.00
		4″	171.00
		5″	497.00
		6″	666.00
		8″	1,367.00
SUFFIXES			**ADD**
–A	Raised Head		N/C
–PW	Plug Wrench		84.00

SEE LEGACY ADDENDUM ON PAGE 369 FOR MORE INFORMATION

For additional product information, please visit www.zurn.com

**Regularly furnished unless otherwise specified.*

Items designated as Best Sellers are most specified and are generally in stock for shipment.

This symbol denotes a product that is engineered to reduce installation and rework time.

Z1471 AIR INLET

ENGINEERING SPECIFICATION

Zurn ZANB1471 fresh air inlet features round nickel bronze, crowned and perforated, complete with 4-point contact locking device.

Product Designation	Dimensions in inches [mm]				Open Area sq in [cm²]	Approximate Weight lb [kg]
	A Pipe Size	C	D	F		
-3	3 [76]	8 [203]	3/4 [19]	6-1/4 [159]	9 [58]	3 [1]
-4	4 [102]					
-5	5 [127]	12 [305]			28 [181]	7 [3]
-6	6 [152]					
-8	8 [203]	15 [381]			55 [355]	9 [4]
-10	10 [254]					

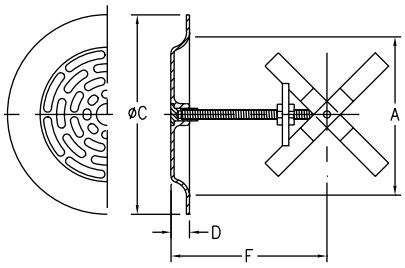

PREFIXES	DESCRIPTION	PRODUCT DESIGNATION	A PIPE SIZE	LIST PRICE
ZANB1471*	Nickel Bronze with Polished Cover	-3	3″	577.00
		-4	4″	577.00
		-5	5″	977.00
		-6	6″	977.00
		-8	8″	1,558.00
		-10	10″	1,558.00
ZAB1471	Bronze with Polished Cover	-3	3″	489.00
		-4	4″	489.00
		-5	5″	767.00
		-6	6″	767.00
		-8	8″	1,187.00
		-10	10″	1,187.00
SUFFIXES				ADD
–CP	Chrome Plated			326.00

Z1474 HEAVY-DUTY CLEANOUT HOUSING

ENGINEERING SPECIFICATION

Zurn Z1474 heavy-duty cleanout housing features Dura-Coated cast iron body, integral anchor flange, and secured scoriated cover with lifting device.

A Pipe Size inches [mm]	Approximate Weight lb [kg]
8-3/8 [213]	40 [18]

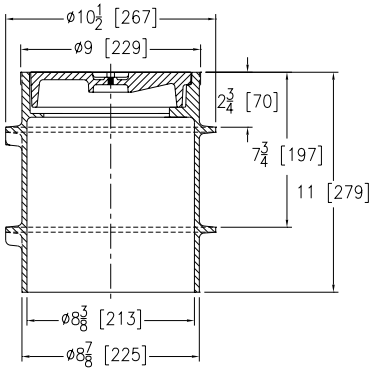

PREFIXES	DESCRIPTION	A PIPE SIZE	LIST PRICE
Z1474*	Dura-Coated Cast Iron	8-3/8″	1,391.00
ZN1474	D.C.C.I. with Polished Nickel Bronze Top	8-3/8″	2,002.00
SUFFIXES			ADD
–DC	Duresist Cover		460.00
–G	Galvanized Cast Iron		556.00
–N	With Internal Cleanout (See Z1440)	4″	206.00
		6″	420.00
–SG	Solid Gasketed Cover		326.00
–VP	Vandal-Proof Screw		98.00
BEST SELLERS			LIST PRICE
Z1474-4-N			1,597.00
Z1474-4-N-VP			1,695.00
ZN1474-N-4			2,208.00
Z1474-6-N			1,811.00

**Regularly furnished unless otherwise specified.*

Items designated as Best Sellers are most specified and are generally in stock for shipment.

This symbol denotes a product that is engineered to reduce installation and rework time.

For additional product information, please visit www.zurn.com

NOTES

SD1018

WATER HAMMER ARRESTORS

Z1700 SHOKTROLS **312**

Z1712 ACCUMUTROL **312**

Z1700 SHOKTROLS

ENGINEERING SPECIFICATION

Where required in piping systems, properly sized water hammer arrestors require Zurn Z1700 (specify size). Features nesting type bellows contained within a casing having sufficient displacement volume to dissipate the calculated kinetic energy generated in the piping system. Both casing and bellows are constructed of Type 304 stainless steel.

NOTE:

All sizes of Zurn Z1700 Shoktrol water hammer arrestors comply with the following specifications:
PDI WH-201
ANSI A112.26.1M
ASSE 1010

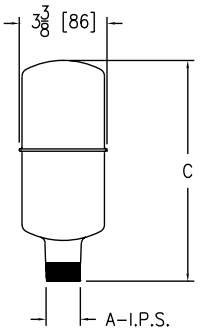

Size	Dimensions in inches [mm] A	Dimensions in inches [mm] C	Approximate Weight lb [kg]	Fixture Unit Capacity
100	3/4 [19]	3-1/2 [89]	1 [0.5]	1-11
200			1-1/2 [0.68]	12-32
300	1 [25]	4-1/2 [114]	1-3/4 [0.79]	33-60
400		6-5/8 [168]	2-3/4 [1.25]	61-113
500		7-1/2 [191]	3-1/4 [1.5]	114-154
600		8-1/2 [216]	3-3/4 [1.7]	155-330

PREFIXES	DESCRIPTION	SIZE	LIST PRICE
Z*	Zurn Shoktrol Water Hammer Arrestors are regularly furnished in all stainless steel construction. Pipe threads are accurately machined to assure tight connection. 3/4″ male I.P.S. inlet is standard for sizes 100 and 200, while 1″ male I.P.S. inlet is standard for sizes 300 thru 600.	100	527.00
		200	1,063.00
		300	1,600.00
		400	4,002.00
		500	4,518.00
		600	5,552.00

BEST SELLERS	LIST PRICE
Z1700-100	527.00
Z1700-200	1,063.00
Z1700-300	1,600.00
Z1700-400	4,002.00

Z1712 ACCUMUTROL

ENGINEERING SPECIFICATION

Shock associated with solenoid or other quick-closing valves serving heavy equipment, such as laundry machines, dishwashers, etc., shall be controlled by installation of Zurn Z1712 Accumutrol. Comes complete with floating stainless steel spherical piston, surge chamber, valve and gauge assembly. Specify size and location.

NOTE:

Maximum temperature 500°F. Maximum pressure 200 PSI residual.

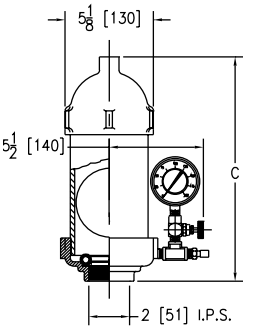

Size	C inches [mm]	Approximate Weight lb [kg]
2000	13 [330]	20 [9]
4000	21 [533]	28 [13]
6000	29 [737]	36 [16]
8000	37 [940]	44 [20]
10000	45 [1143]	52 [24]
12000	53 [1346]	60 [27]
14000	61 [1549]	68 [31]
16000	69 [1753]	76 [34]

PREFIXES	DESCRIPTION	SIZE	LIST PRICE
Z*	Bronze surge chamber, Viton valve seat and stainless steel spherical piston.	2000	6,445.00
		4000	7,466.00
		6000	8,561.00
		8000	10,419.00
		10000	12,018.00
		12000	13,620.00
		14000	20,363.00
		16000	22,479.00

BEST SELLERS	LIST PRICE
Z1712-2000	6,445.00
Z1712-6000	8,561.00

For additional product information, please visit www.zurn.com

**Regularly furnished unless otherwise specified.*
Items designated as Best Sellers are most specified and are generally in stock for shipment.

STAINLESS STEEL DRAINS

STAINLESS STEEL DRAINS – APPLICATION INDEX	314
STAINLESS STEEL DRAINS – BUTT-WELD ENGINEERING DATA	314
Z1715 15" DIAMETER ROOF DRAIN	315
Z1717 SCUPPER DRAIN	315
Z1720 4" X 8" OPEN SIGHT DRIP DRAIN	316
Z1721 6" X 12" OPEN SIGHT DRIP DRAIN	316
Z1724 ROUND FUNNEL	317
Z1725 OVAL FUNNEL	317
Z1726 ADJUSTABLE MEDIUM DUTY FLOOR DRAIN WITH ROUND TOP	318
Z1727 ADJUSTABLE MEDIUM DUTY FLOOR DRAIN WITH SQUARE TOP	319
Z1730 9" DIAMETER HEAVY-DUTY SHALLOW TYPE FLOOR DRAIN	320
Z1731 9" DIAMETER HEAVY-DUTY MEDIUM DEPTH FLOOR DRAIN	320
Z1732 9-5/8" DIAMETER HEAVY-DUTY ADJUSTABLE FLOOR DRAIN	321
Z1735 12" DIAMETER HEAVY-DUTY FLOOR DRAIN	321
Z1736 12" DIAMETER EXTRA HEAVY-DUTY FLOOR DRAIN	322
Z1737 15" DIAMETER EXTRA HEAVY-DUTY FLOOR DRAIN	322
Z1739 PIT DRAIN	323
Z1740 BACKWATER VALVE	323
Z1745 FLOOR CLEANOUT WITH O-RING SEAL PLUG	324
Z1749 12" X 12" SANI-FLOR RECEPTOR WITH 4" SUMP DEPTH	325
Z1750 12" X 12" SANI-FLOR RECEPTOR WITH 6" SUMP DEPTH	326
Z1751 12" X 12" SANI-FLOR RECEPTOR WITH 8" SUMP DEPTH	327
Z1752 12" X 12" SANI-FLOR RECEPTOR WITH 10" SUMP DEPTH	328
Z1755 13-3/8" SQUARE SANI-FLOR RECEPTOR 6" SUMP WITH ADJUSTABLE CLAMP FRAME	329
Z1761 24-5/16" SQUARE KETTLE DRAIN WITH 8" SUMP DEPTH	329
Z1762 25" X 15-1/2" KETTLE DRAIN	330
Z1763 37-9/16" X 22-7/8" KETTLE DRAIN	331

STAINLESS STEEL DRAINS – APPLICATION INDEX

Product selection should be made with a specific application and the type of construction in mind. The varied types and sizes of Zurn drainage products, together with their options, offer a drain selection for all applications.

APPLICATION	RECOMMENDED DRAINAGE PRODUCT
Main Roof Drain	Z1715
Wall or Scupper Drain	Z1717
Food Service Floor Drain	Z1749, Z1750, Z1751, Z1752, Z1761, Z1762, Z1763
Indirect Waste Floor Receptor	Z1720, Z1721, Z1750-1, Z1751-1, Z1752-1
Heavy-Duty Floor Drain	Z1730, Z1731, Z1732, Z1735, Z1737
Adjustable Floor Drain	Z1726, Z1727, Z1732
Extra-Heavy-Duty Floor Drain	Z1736, Z1737
Wall of Pitt Drain	Z1739
Backwater Valve	Z1740
Sanitary Floor Cleanout	Z1745
Pool Deck Drain	Z1723

STAINLESS STEEL DRAINS – BUTT-WELD ENGINEERING DATA

Butt-Welding Casting Outlets

The outlet sections of all cast carbon steel or cast stainless steel products as specified from this brochure shall conform to ANSI-B36.10M-85 and ANSI-B36.19M-85 standards for pipe wall thicknesses for Schedule 10, Schedule 40, or Schedule 80 as specified.

Butt-welding ends of the above mentioned sections shall conform to ANSI B16.25-86 standard for plain welding bevel of 37-1/2° + 2-1/2° and root face (land) of 1/16″ + 1/32″.

All outlet requirements must be specified and made known to the manufacturer prior to quotation of prices of products applicable to the project.

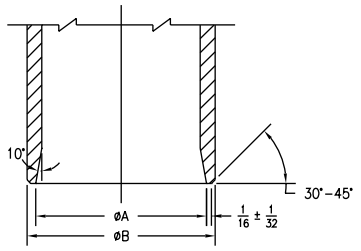

Schedule 10S Pipe

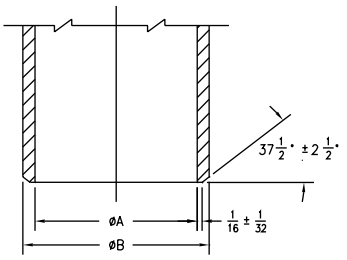

Schedule 40 Pipe

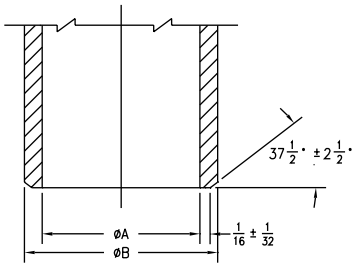

Schedule 80 Pipe

Schedule Pipe	Dimensions in Inches [mm]									
	Pipe Size									
	2 [51]		3 [76]		4 [102]		6 [152]		8 [203]	
	A	B	A	B	A	B	A	B	A	B
10S	2.157	2.375	3.260	3.500	4.260	4.500	6.375	6.625	8.329	8.625
40	2.067	2.375	3.068	3.500	4.026	4.500	6.065	6.625	7.981	8.625
80	1.939	2.375	2.900	3.500	3.826	4.500	5.761	6.625	7.625	8.625

Z1715 15″ DIAMETER ROOF DRAIN

ENGINEERING SPECIFICATION

Zurn Z1715 roof drain features Type 304 (CF8) stainless steel body, galvanized cast iron combination gravel guard/flashing clamp, and dome strainer.

Dimensions in inches [mm] A Pipe Size	Approximate Weight lb [kg]	Dome Open Area sq in [cm²]
Butt-Weld (BW) - Specify Schedule 10 or 40		
3BW, 4BW	52 [24]	103 [665]
6BW	54 [24]	
Threaded (IP)		
3IP, 4IP	52 [24]	103 [665]

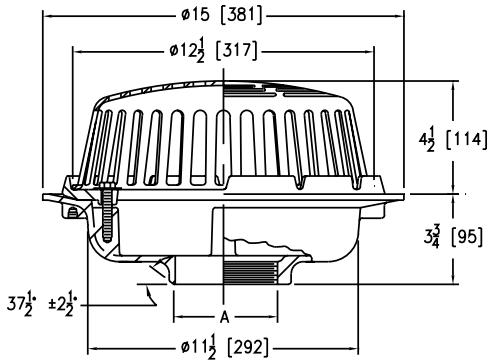

PREFIXES	DESCRIPTION	A PIPE SIZE	LIST PRICE
Z1715*	Type 304 (CF8) Stainless Steel Body	3″, 4″	**9,157.00**
		6″	**10,301.00**
ZM1715	Type 316 (CF8M) Stainless Steel Body	3″, 4″	**10,768.00**
		6″	**11,908.00**
OUTLETS (SPECIFY PIPE SIZE IN INCHES AND TYPE OF OUTLET)			
OUTLET TYPE		**PIPE SIZE/OUTLET TYPE**	**ADD**
BW	Butt-weld (Specify Schedule 10 or 40)	3BW, 4BW, 6BW	**N/C**
IP	Threaded	3IP, 4IP	**N/C**
SUFFIXES			**ADD**
–C	Galvanized Underdeck Clamp		**317.00**
–DP	Top-Set® Roof Deck Plate (Replaces both the -C and -R)		**460.00**
–E	Galvanized Extension (Specify height from 1″ to 4″)		**1,026.00**
–R	Galvanized Steel Sump Receiver		**346.00**
–VP	Vandal-Proof Secured Top		**123.00**
BEST SELLER			**LIST PRICE**
Z1715-4IP-DP			**POA**

Z1717 SCUPPER DRAIN

ENGINEERING SPECIFICATION

Zurn Z1717 scupper drain features Type 304 (CF8) stainless steel body, cast aluminum oblique grate, and clamp collar.

Dimensions in inches [mm] A Pipe Size	D	M	Approximate Weight lb [kg]	Grate Open Area sq in [cm²]
Butt-weld (BW) - Specify Schedule 10 or 40				
3BW	2 [51]	6-1/8 [156]	24 [11]	20 [129]
4BW	2-1/2 [63]	5-5/8 [143]		

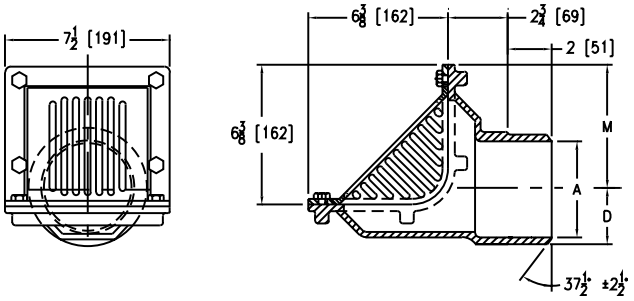

PREFIXES	DESCRIPTION	A PIPE SIZE	LIST PRICE
Z1717*	Type 304 (CF8) Stainless Steel Body	3″, 4″	**6,153.00**
ZM1717	Type 316 (CF8M) Stainless Steel Body	3″, 4″	**7,375.00**
OUTLETS (SPECIFY PIPE SIZE IN INCHES AND TYPE OF OUTLET)			
OUTLET TYPE		**PIPE SIZE/OUTLET TYPE**	**ADD**
BW	Butt-weld (Specify Schedule 10 or 40)	3BW, 4BW	**N/C**
SUFFIXES			**ADD**
–VP	Vandal-Proof Secured Top		**208.00**
BEST SELLER			**LIST PRICE**
Z1717-4BW-SC40			**POA**

**Regularly furnished unless otherwise specified.*

Items designated as Best Sellers are most specified and are generally in stock for shipment.

This symbol denotes a product that is engineered to reduce installation and rework time.

For additional product information, please visit www.zurn.com

Z1720 4″ X 8″ OPEN SIGHT DRIP DRAIN

ENGINEERING SPECIFICATION

Zurn Z1720 4″ x 8″ open sight drip drain features Type 304 (CF8) stainless steel body and integral aluminum bottom dome strainer, all with plain finish.

Dimensions in inches [mm]	Approximate Weight lb [kg]
A Pipe Size	
Butt-Weld (BW) - Specify Schedule 10 or 40	
2BW, 3BW	13 [6]
Threaded (IP)	
2IP, 3IP	13 [6]

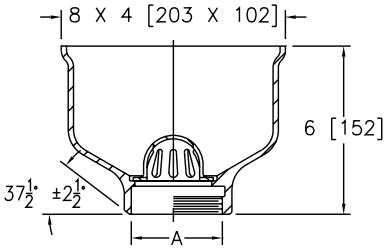

PREFIXES	DESCRIPTION	A PIPE SIZE	LIST PRICE
Z1720*	Type 304 (CF8) Stainless Steel Body	2″, 3″	2,235.00
ZM1720	Type 316 (CF8M) Stainless Steel Body	2″, 3″	2,570.00
OUTLETS (SPECIFY PIPE SIZE IN INCHES AND TYPE OF OUTLET)			
OUTLET TYPE		PIPE SIZE/OUTLET TYPE	ADD
BW	Butt-weld (Specify Schedule 10 or 40)	2BW, 3BW	N/C
IP	Threaded	2IP, 3IP	N/C
SUFFIXES			ADD
–DB	Stainless Steel Dome Bottom Strainer		1,154.00
–FG	Flush Gate		931.00
BEST SELLER			LIST PRICE
Z1720-3IP			POA

Z1721 6″ X 12″ OPEN SIGHT DRIP DRAIN

ENGINEERING SPECIFICATION

Zurn Z1721 6″ x 12″ open sight drip drain features Type 304 (CF8) stainless steel body and integral aluminum bottom dome strainer, all with plain finish.

Dimensions in inches [mm]		Approximate Weight lb [kg]
A Pipe Size	E Body Height Dimensions	
Butt-Weld (BW) - Specify Schedule 10 or 40		
3BW, 4BW, 6BW	10 [254]	30 [14]
Threaded (IP)		
3IP, 4IP, 6IP	10 [254]	30 [14]

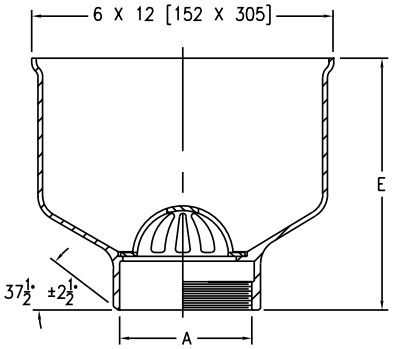

PREFIXES	DESCRIPTION	A PIPE SIZE	LIST PRICE
Z1721*	Type 304 (CF8) Stainless Steel Body	3″, 4″, 6″	8,154.00
ZM1721	Type 316 (CF8M) Stainless Steel Body	3″, 4″, 6″	9,038.00
OUTLETS (SPECIFY PIPE SIZE IN INCHES AND TYPE OF OUTLET)			
OUTLET TYPE		PIPE SIZE/OUTLET TYPE	E BODY HT. DIM.	ADD
BW	Butt-weld (Specify Schedule 10 or 40)	3BW, 4BW, 6BW	10″	N/C
IP	Threaded	3IP, 4IP, 6IP	10″	N/C
SUFFIXES				ADD
–DB	Stainless Steel Dome Bottom Strainer			1,484.00
–FG	Flush Gate			1,994.00

For additional product information, please visit www.zurn.com

**Regularly furnished unless otherwise specified.*
Items designated as Best Sellers are most specified and are generally in stock for shipment.
This symbol denotes a product that is engineered to reduce installation and rework time.

Z1724 ROUND FUNNEL

ENGINEERING SPECIFICATION

Zurn Z1724 4″ or 6″ diameter round funnel features Type 304 (CF8) stainless steel with satin finish and securing screws.

Dimensions in inches [mm]			Approximate Weight lb [kg]
A	C	E	
4 [102]	2-1/4 [57]	3-3/4 [95]	3 [1]
6 [152]	2-7/8 [73]	6 [152]	5 [2]

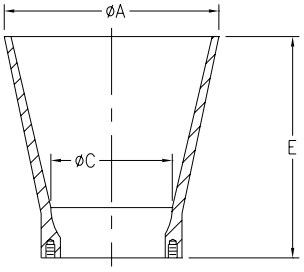

PREFIXES	DESCRIPTION	PRODUCT DESIG.	'A' DIA. SIZE	LIST PRICE
Z1724*	Type 304 (CF8) Stainless Steel Body	-4	4″	1,328.00
		-6	6″	1,638.00
ZM1724	Type 316 (CF8M) Stainless Steel Body	-4	4″	1,461.00
		-6	6″	1,800.00
BEST SELLER				LIST PRICE
Z1724-4				POA

Z1725 OVAL FUNNEL

ENGINEERING SPECIFICATION

Zurn Z1725 8-7/8″ x 3-5/8″ oval funnel features Type 304 (CF8) stainless steel with satin finish and securing screws. (For use with 6″ top size or larger.)

Dimensions in inches [mm]	Approximate Weight lb [kg]
A Oval Size	
8-7/8 [225] x 3-5/8 [92]	5 [2]

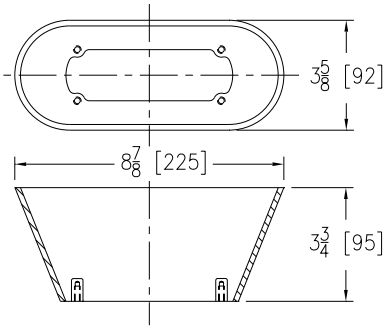

PREFIXES	DESCRIPTION	A PIPE SIZE	LIST PRICE
Z1725*	Type 304 (CF8) Stainless Steel Body	8-7/8″ x 3-5/8″	1,636.00
ZM1725	Type 316 (CF8M) Stainless Steel Body	8-7/8″ x 3-5/8″	1,830.00

**Regularly furnished unless otherwise specified.*

Items designated as Best Sellers are most specified and are generally in stock for shipment.

This symbol denotes a product that is engineered to reduce installation and rework time.

For additional product information, please visit www.zurn.com

Z1726 ADJUSTABLE MEDIUM DUTY FLOOR DRAIN WITH ROUND TOP

ENGINEERING SPECIFICATION

Zurn Z1726 medium-duty adjustable floor drain features all Type 304 (CF8) stainless steel, anchor flange (clamp collar with seepage holes, when specified), and 6" diameter medium-duty vertically adjustable satin finish top.

Dimensions in inches [mm]			Approximate Weight lb [kg]	Grate Open Area sq in [cm²]
A	B	E		
Butt-Weld (BW) - Specify Schedule 10 or 40				
2BW, 3BW	5 [127]	2-7/8 [73]	13 [6]	7 [45]
2BW, 3BW, 4BW	6 [152]		13 [6]	11 [71]
2BW, 3BW, 4BW	7 [178]		14 [6]	15 [97]
3BW, 4BW, 6BW	8 [203]		16 [7]	20 [129]
6BW	10 [254]		19 [9]	27 [174]
Inside Caulk (IC)				
2IC, 3IC	5 [127]	4-3/8 [111]	13 [6]	7 [45]
2IC, 3IC, 4IC	6 [152]		13 [6]	11 [71]
2IC, 3IC, 4IC	7 [178]		14 [6]	15 [97]
3IC, 4IC	8 [203]		16 [7]	20 [129]
Threaded (IP)				
2IP, 3IP	5 [127]	2-7/8 [73]	13 [6]	7 [45]
2IP, 3IP, 4IP	6 [152]		13 [6]	11 [71]
2IP, 3IP, 4IP	7 [178]		14 [6]	15 [97]
3IP, 4IP	8 [203]		16 [7]	20 [129]

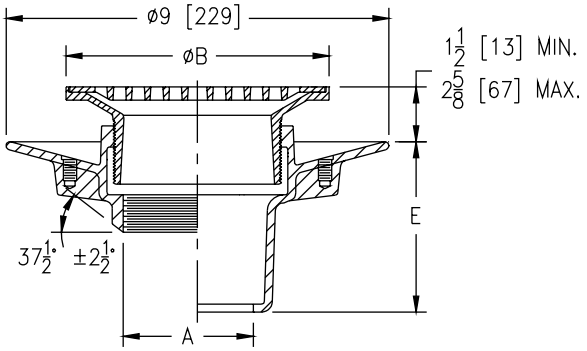

PREFIXES	DESCRIPTION	STRAINER DESIG.	A PIPE SIZE	LIST PRICE
Z1726*	Type 304 (CF8) Stainless Steel Body	–RD5	2", 3"	**5,570.00**
		–RD6	2", 3", 4"	**5,811.00**
		–RD7	2", 3", 4"	**6,032.00**
		–RD8	3", 4", 6"	**6,281.00**
		–RD10	6"	**6,631.00**
ZM1726	Type 316 (CF8M) Stainless Steel Body	–RD5	2", 3"	**POA**
		–RD6	2", 3", 4"	**POA**
		–RD7	2", 3", 4"	**POA**
		–RD8	3", 4", 6"	**POA**
		–RD10	6"	**POA**

OUTLETS (SPECIFY PIPE SIZE IN INCHES AND TYPE OF OUTLET)				
OUTLET TYPE		PIPE SIZE/OUTLET TYPE	E BODY HT. DIM.	ADD
BW	Butt-weld (Specify Schedule 10 or 40)	2BW, 3BW, 4BW, 6BW	2-7/8"	**N/C**
IC	Inside Caulk	2IC, 3IC, 4IC	4-3/8"	**N/C**
IP	Threaded	2IP, 3IP, 4IP	2-7/8"	**N/C**

SUFFIXES		ADD
–K	Seepage Holes Only	**362.00**
–KC	Clamp Collar with Seepage Holes	**770.00**
–VP	Vandal-Proof Secured Top	**92.00**
–Y	Stainless Steel Sediment Bucket	**580.00**

BEST SELLERS	LIST PRICE
Z1726-3IP	**POA**
Z1726-3IP-RD5	**POA**
Z1726-4IP-K	**POA**

For additional product information, please visit www.zurn.com

**Regularly furnished unless otherwise specified.*
Items designated as Best Sellers are most specified and are generally in stock for shipment.
This symbol denotes a product that is engineered to reduce installation and rework time.

Z1727 ADJUSTABLE MEDIUM DUTY FLOOR DRAIN WITH SQUARE TOP

ENGINEERING SPECIFICATION

Zurn Z1727 medium-duty adjustable floor drain features all Type 304 (CF8) stainless steel, anchor flange (clamp collar with seepage holes when specified), and 6″ square medium-duty vertically adjustable satin finish top.

Dimensions in inches [mm]			Approximate Weight lb [kg]	Grate Open Area sq in [cm²]
A	B	E		
Butt-Weld (BW) - Specify Schedule 10 or 40				
2BW, 3BW	5 [127]	2-7/8 [73]	13 [6]	9 [58]
2BW, 3BW, 4BW	6 [152]		14 [6]	13 [84]
3BW, 4BW, 6BW	8 [203]		18 [8]	25 [161]
Inside Caulk (IC)				
3IC	5 [127]	4-3/8 [111]	13 [6]	9 [58]
3IC, 4IC	6 [152]		14 [6]	13 [84]
3IC, 4IC	8 [203]		18 [8]	25 [161]
Threaded (IP)				
2IP, 3IP	5 [127]	2-7/8 [73]	13 [6]	9 [58]
2IP, 3IP, 4IP	6 [152]		14 [6]	13 [84]
3IP, 4IP	8 [203]		18 [8]	25 [161]

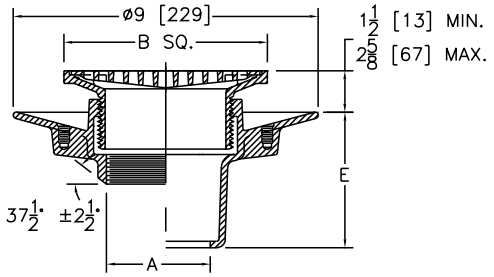

PREFIXES	DESCRIPTION	STRAINER DESIG.	A PIPE SIZE	LIST PRICE
Z1727*	Type 304 (CF8) Stainless Steel Body and Top Assembly	–SQ5	2″, 3″	**5,766.00**
		–SQ6	2″, 3″, 4″	**6,015.00**
		–SQ8	3″, 4″, 6″	**6,503.00**
ZM1727	Type 316 (CF8M) Stainless Steel Body and Top Assembly	–SQ5	2″, 3″	**POA**
		–SQ6	2″, 3″, 4″	**POA**
		–SQ8	3″, 4″, 6″	**POA**

OUTLETS (SPECIFY PIPE SIZE IN INCHES AND TYPE OF OUTLET)				
OUTLET TYPE		PIPE SIZE/OUTLET TYPE	E BODY HT. DIM.	ADD
BW	Butt-weld (Specify Schedule 10 or 40)	2BW, 3BW, 4BW, 6BW	2-7/8″	**N/C**
IC	Inside Caulk	3IC, 4IC	4-3/8″	**N/C**
IP	Threaded	2IP, 3IP, 4IP	2-7/8″	**N/C**

SUFFIXES		ADD
–K	Seepage Holes Only	**362.00**
–KC	Clamp Collar with Seepage Holes	**770.00**
–VP	Vandal-Proof Secured Top	**92.00**
–Y	Stainless Steel Sediment Bucket	**580.00**

BEST SELLERS	LIST PRICE
Z1727-3BW-SCH40-K-SQ5	**POA**
Z1727-4IP-SQ8	**POA**

**Regularly furnished unless otherwise specified.*

Items designated as Best Sellers are most specified and are generally in stock for shipment.

This symbol denotes a product that is engineered to reduce installation and rework time.

For additional product information, please visit www.zurn.com

Z1730 9″ DIAMETER HEAVY-DUTY SHALLOW TYPE FLOOR DRAIN

ENGINEERING SPECIFICATION

Zurn Z1730 9″ diameter shallow type, heavy-duty floor drain features all Type 304 (CF8) stainless steel, integral anchor flange, and non-tilt grate with plain finish.

Dimensions in inches [mm]		Approximate Weight lb [kg]	Grate Open Area sq in [cm²]
A	E		
Butt-Weld (BW) - Specify Schedule 10 or 40			
2BW, 3BW, 4BW	4-13/16 [122]	20 [9]	21 [135]
Threaded (IP)			
2IP, 3IP, 4IP	4-13/16 [122]	20 [9]	21 [135]
No-Hub (NH)			
2NH, 3NH, 4NH	4-13/16 [122]	20 [9]	21 [135]

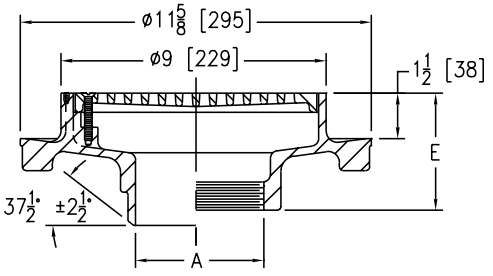

PREFIXES	DESCRIPTION	A PIPE SIZE	LIST PRICE
Z1730*	Type 304 (CF8) Stainless Steel Body	2″, 3″, 4″	5,426.00
ZM1730	Type 316 (CF8M) Stainless Steel Body	2″, 3″, 4″	7,658.00

OUTLETS (SPECIFY PIPE SIZE IN INCHES AND TYPE OF OUTLET)				
OUTLET TYPE		PIPE SIZE/OUTLET TYPE	E BODY HT. DIM.	ADD
BW	Butt-weld (Specify Schedule 10 or 40)	2BW, 3BW, 4BW	4-13/16″	N/C
IP	Threaded	2IP, 3IP, 4IP	4-13/16″	N/C
NH	No-Hub	2NH, 3NH, 4NH	4-13/16″	N/C

SUFFIXES		ADD
–K	Seepage Holes Only	362.00
–KC	Clamp Collar with Seepage Holes	770.00
–TS	Top Secured with Slotted Screws	137.00
–VP	Vandal-Proof Secured Top	158.00

BEST SELLER	LIST PRICE
Z1730-4NH	POA

Z1731 9″ DIAMETER HEAVY-DUTY MEDIUM DEPTH FLOOR DRAIN

ENGINEERING SPECIFICATION

Zurn Z1731 9″ diameter heavy-duty floor drain features all Type 304 (CF8) stainless steel, anchor flange, and loose set grate with plain finish.

Dimensions in inches [mm]		Approximate Weight lb [kg]	Grate Open Area sq in [cm²]
A	E		
Butt-Weld (BW) - Specify Schedule 10 or 40			
3BW, 4BW	5-11/16 [144]	22 [10]	21 [135]
Inside Caulk (IC)			
3IC, 4IC	5-11/16 [144]	22 [10]	21 [135]
Threaded (IP)			
3IP, 4IP	5-11/16 [144]	22 [10]	21 [135]
No-Hub (NH)			
3NH, 4NH	5-11/16 [144]	22 [10]	21 [135]

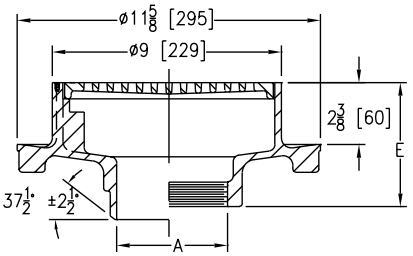

PREFIXES	DESCRIPTION	A PIPE SIZE	LIST PRICE
Z1731*	Type 304 (CF8) Stainless Steel Body	3″, 4″	6,960.00
ZM1731	Type 316 (CF8M) Stainless Steel Body	3″, 4″	7,509.00

OUTLETS (SPECIFY PIPE SIZE IN INCHES AND TYPE OF OUTLET)				
OUTLET TYPE		PIPE SIZE/OUTLET TYPE	E BODY HT. DIM.	ADD
BW	Butt-weld (Specify Schedule 10 or 40)	3BW, 4BW	5-11/16″	N/C
IC	Inside Caulk	3IC, 4IC	5-11/16″	N/C
IP	Threaded	3IP, 4IP	5-11/16″	N/C
NH	No-Hub	3NH, 4NH	5-11/16″	N/C

SUFFIXES		ADD
–K	Seepage Holes Only	362.00
–KC	Clamp Collar with Seepage Holes	770.00
–TS	Top Secured with Slotted Screws	137.00
–VP	Vandal-Proof Secured Top	158.00
–Y	Sediment Bucket	1,434.00

BEST SELLERS	LIST PRICE
Z1731-3IC	POA
Z1731-4IC	POA
Z1731-4NH-VP	POA

For additional product information, please visit www.zurn.com

**Regularly furnished unless otherwise specified.*
Items designated as Best Sellers are most specified and are generally in stock for shipment.
This symbol denotes a product that is engineered to reduce installation and rework time.

Z1732 9-5/8″ DIAMETER HEAVY-DUTY ADJUSTABLE FLOOR DRAIN

ENGINEERING SPECIFICATION

Zurn Z1732 heavy-duty adjustable floor drain features all Type 304 (CF8) stainless steel, integral anchor flange, adjustable top frame, and deep flange grate with plain finish.

Dimensions in inches [mm]		Approximate Weight lb [kg]	Grate Open Area sq in [cm²]
A	E		
Threaded (IP)			
2IP, 3IP, 4IP	6 [152]	40 [18]	14 [90]
6IP	6-3/8 [162]		
No-Hub (NH)			
2NH, 3NH, 4NH	6 [152]	40 [18]	14 [90]
6NH	6-3/8 [162]		

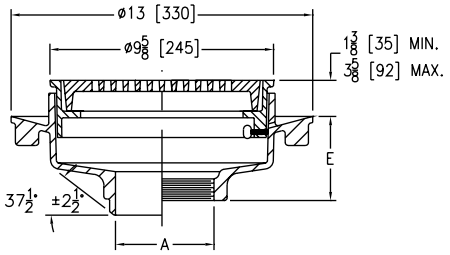

PREFIXES	DESCRIPTION	A PIPE SIZE	LIST PRICE
Z1732*	Type 304 (CF8) Stainless Steel Body	2″, 3″, 4″, 6″	**8,562.00**
ZM1732	Type 316 (CF8M) Stainless Steel Body	2″, 3″, 4″, 6″	**9,445.00**

OUTLETS (SPECIFY PIPE SIZE IN INCHES AND TYPE OF OUTLET)

OUTLET	TYPE	PIPE SIZE/OUTLET TYPE	E BODY HT. DIM.	ADD
IP	Threaded	2IP, 3IP, 4IP	6″	**N/C**
		6IP	6-3/8″	**N/C**
NH	No-Hub	2NH, 3NH, 4NH	6″	**N/C**
		6NH	6-3/8″	**N/C**

SUFFIXES		ADD
–K	Seepage Holes Only	**362.00**
–KC	Clamp Collar with Seepage Holes	**770.00**
–SC	Solid Secured Cover	**1,906.00**
–VP	Vandal-Proof Secured Top	**467.00**
–Y	Sediment Bucket	**1,434.00**
–30	Bronze Closure Plug	**1,151.00**
–33	Type 304 (CF8) Stainless Steel Closure Plug	**2,647.00**

BEST SELLERS	LIST PRICE
Z1732-2NH	**POA**
Z1732-3NH-33-KC	**POA**
Z1732-3NH-K	**POA**
Z1732-3NH-KC	**POA**
Z1732-3NH-KC-Y	**POA**
Z1732-4NH	**POA**

Z1735 12″ DIAMETER HEAVY-DUTY FLOOR DRAIN

ENGINEERING SPECIFICATION

Zurn Z1735 12″ diameter heavy-duty floor drain features all Type 304 (CF8) stainless steel body with integral anchor flange and non-tilt grate with plain finish.

Dimensions in inches [mm]		Approximate Weight lb [kg]	Grate Open Area sq in [cm²]
A	E		
Butt-Weld (BW) - Specify Schedule 10 or 40			
3BW, 4BW	6 [152]	50 [23]	33 [213]
6BW		54 [24]	
Threaded (IP)			
3IP, 4IP	5-1/4 [133]	50 [23]	33 [213]
6IP		54 [24]	

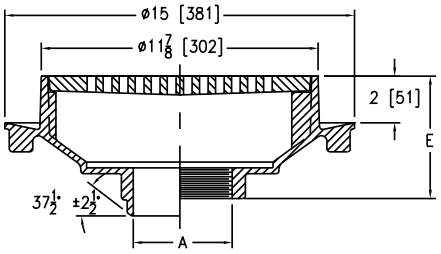

PREFIXES	DESCRIPTION	A PIPE SIZE	LIST PRICE
Z1735*	Type 304 (CF8) Stainless Steel Body	3″, 4″	**12,325.00**
		6″	**13,969.00**
ZM1735	Type 316 (CF8M) Stainless Steel Body	3″, 4″	**13,561.00**
		6″	**15,453.00**

OUTLETS (SPECIFY PIPE SIZE IN INCHES AND TYPE OF OUTLET)

OUTLET	TYPE	PIPE SIZE/OUTLET TYPE	E BODY HT. DIM.	ADD
BW	Butt-weld (Specify Schedule 10 or 40)	3BW, 4BW, 6BW	6″	**N/C**
IP	Threaded	3IP, 4IP, 6IP	5-1/4″	**N/C**

SUFFIXES		ADD
–K	Seepage Holes Only	**362.00**
–KC	Clamp Collar with Seepage Holes	**990.00**
–TS	Top Secured with Slotted Screws	**176.00**
–VP	Vandal-Proof Secured Top	**209.00**
–30	Bronze Closure Plug	**1,151.00**
–33	Type 304 (CF8) Stainless Steel Closure Plug	**2,647.00**

**Regularly furnished unless otherwise specified.*

Items designated as Best Sellers are most specified and are generally in stock for shipment.

This symbol denotes a product that is engineered to reduce installation and rework time.

For additional product information, please visit www.zurn.com

Z1736 12″ DIAMETER EXTRA HEAVY-DUTY FLOOR DRAIN

ENGINEERING SPECIFICATION

Zurn Z1736 12″ diameter extra heavy-duty floor drain features all Type 304 (CF8) stainless steel body with integral anchor flange and deep flange grate with plain finish.

Dimensions in inches [mm]		Approximate Weight lb [kg]	Grate Open Area sq in [cm²]
A	E		
Butt-Weld (BW) - Specify Schedule 10 or 40			
3BW, 4BW, 6BW	6 [152]	61 [28]	34 [219]
Threaded (IP)			
3IP, 4IP, 6IP	6-7/16 [164]	61 [28]	34 [219]

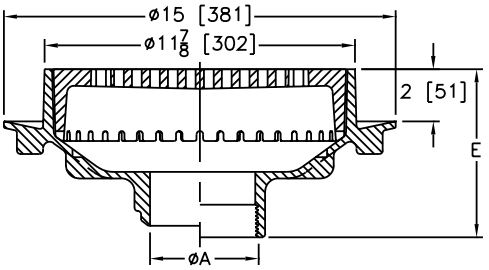

PREFIXES	DESCRIPTION	A PIPE SIZE	LIST PRICE
Z1736*	Type 304 (CF8) Stainless Steel Body	3″, 4″, 6″	13,557.00
ZM1736	Type 316 (CF8M) Stainless Steel Body	3″, 4″, 6″	14,918.00

OUTLETS (SPECIFY PIPE SIZE IN INCHES AND TYPE OF OUTLET)				
OUTLET TYPE		PIPE SIZE/OUTLET TYPE	E BODY HT. DIM.	ADD
BW	Butt-weld (Specify Schedule 10 or 40)	3BW, 4BW, 6BW	6″	N/C
IP	Threaded	3IP, 4IP, 6IP	6-7/16″	N/C

SUFFIXES		ADD
–K	Seepage Holes Only	362.00
–KC	Clamp Collar with Seepage Holes	990.00
–TS	Top Secured with Slotted Screws	176.00
–VP	Vandal-Proof Secured Top	1,264.00
–Y	Sediment Bucket	410.00
–30	Bronze Closure Plug	1,264.00
–33	Type 304 Stainless Steel Closure Plug	2,647.00

BEST SELLER	LIST PRICE
Z1736-4IP-KC-Y	POA

Z1737 15″ DIAMETER EXTRA HEAVY-DUTY FLOOR DRAIN

ENGINEERING SPECIFICATION

Zurn Z1737 15″ diameter extra heavy-duty floor drain features all Type 304 (CF8) stainless steel body, integral anchor flange, and non-tilt grate with plain finish.

Dimensions in inches [mm]		Approximate Weight lb [kg]	Grate Open Area sq in [cm²]
A	E		
Threaded (IP)			
8IP	5-1/2 [140]	85 [39]	55 [355]

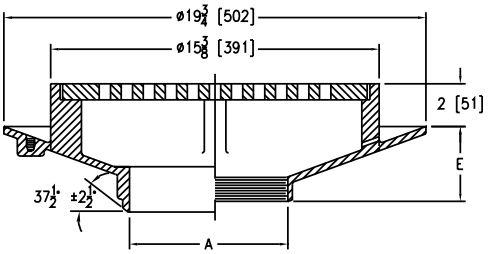

PREFIXES	DESCRIPTION	A PIPE SIZE	LIST PRICE
Z1737*	Type 304 (CF8) Stainless Steel Body	8″	25,859.00
ZM1737	Type 316 (CF8M) Stainless Steel Body	8″	31,111.00

OUTLETS (SPECIFY PIPE SIZE IN INCHES AND TYPE OF OUTLET)				
OUTLET TYPE		PIPE SIZE/OUTLET TYPE	E BODY HT. DIM.	ADD
IP	Threaded	8IP	5-1/2″	N/C

SUFFIXES		ADD
–K	Seepage Holes Only	362.00
–KC	Clamp Collar with Seepage Holes	662.00
–TS	Top Secured with Slotted Screws	137.00
–VP	Vandal-Proof Secured Top	152.00

For additional product information, please visit www.zurn.com

**Regularly furnished unless otherwise specified.*
Items designated as Best Sellers are most specified and are generally in stock for shipment.
This symbol denotes a product that is engineered to reduce installation and rework time.

Z1739 PIT DRAIN

ENGINEERING SPECIFICATION

Zurn Z1739 pit drain features all Type 304 (CF8) stainless steel body with integral anchor flange, grate with plain finish, and bronze backwater valve.

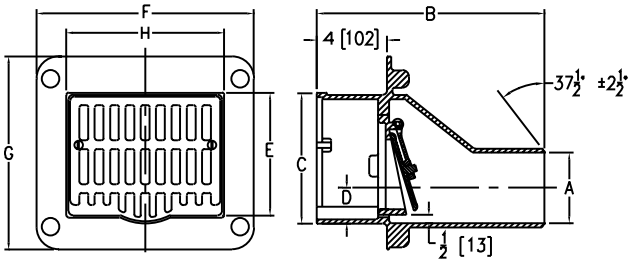

PREFIXES	DESCRIPTION	A PIPE SIZE	LIST PRICE
Z1739*	Type 304 (CF8) Stainless Steel Body	3″	14,602.00
		4″	20,467.00
ZM1739	Type 316 (CF8M) Stainless Steel Body	3″	17,527.00
		4″	24,089.00
OUTLETS (SPECIFY PIPE SIZE IN INCHES AND TYPE OF OUTLET)			
OUTLET TYPE		**PIPE SIZE/OUTLET TYPE**	**ADD**
BW	Butt-weld (Specify Schedule 10 or 40)	3BW, 4BW	N/C
SUFFIXES			**ADD**
–VP	Vandal-Proof Secured Top		152.00
BEST SELLER			**LIST PRICE**
Z1739-3BW			POA

Dimensions in inches [mm]								Approximate Weight lb [kg]	Grate Open Area sq in [cm²]
A	B	C	D	E	F	G	H		
Butt-Weld (BW) - Specify Schedule 10 or 40									
3BW	13 [330]	7-5/8 [194]	1-1/2 [38]	6-7/8 [175]	12-3/4 [324]	11 [279]	9-1/4 [235]	50 [23]	20 [129]
4BW			2 [51]						

Z1740 BACKWATER VALVE

ENGINEERING SPECIFICATION

Zurn Z1740 backwater valve features Type 304 (CF8) stainless steel body with bronze backwater valve and bronze threaded cover.

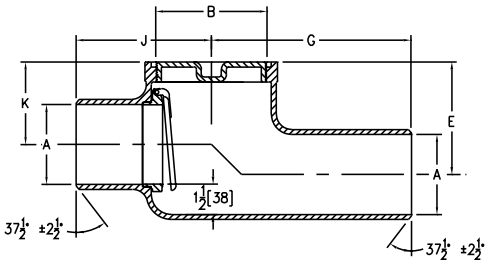

PREFIXES	DESCRIPTION	A PIPE SIZE	LIST PRICE
Z1740*	Type 304 (CF8) Stainless Steel Body	4″	11,335.00
ZM1740	Type 316 (CF8M) Stainless Steel Body	4″	13,717.00
OUTLETS (SPECIFY PIPE SIZE IN INCHES AND TYPE OF OUTLET)			
OUTLET TYPE		**PIPE SIZE/ OUTLET TYPE**	**ADD**
BW	Butt-weld (Specify Schedule 10 or 40)	4BW	N/C
SUFFIXES			**ADD**
–SP	Stainless Steel Threaded Cover		3,438.00
–SV	Stainless Steel Backwater Valve		4,241.00

Dimensions in inches [mm]						Approximate Weight lb [kg]
A	B	E	G	J	K	
Butt-Weld (BW) - Specify Schedule 10 or 40						
4BW	5 [127]	5-5/8 [143]	8-1/2 [216]	6-3/4 [171]	4-1/8 [105]	40 [18]

**Regularly furnished unless otherwise specified.*

Items designated as Best Sellers are most specified and are generally in stock for shipment.

This symbol denotes a product that is engineered to reduce installation and rework time.

For additional product information, please visit www.zurn.com

Z1745 FLOOR CLEANOUT WITH O-RING SEAL PLUG

ENGINEERING SPECIFICATION

Zurn Z1745 floor cleanout features all Type 304 (CF8) stainless steel body and plug with O-ring seal. Plug is scoriated with satin finish. Spanner wrench provided for each plug size.

Dimensions in inches [mm]				Approximate Weight lb [kg]
A	B	C	E	
Butt-Weld (BW) - Specify Schedule 10 or 40				
2BW	2-3/4 [70]	4 [102]	1-5/8 [41]	6 [3]
3BW	3-1/2 [89]	4-7/8 [124]		
4BW	4-1/2 [114]	6 [152]		
6BW	7-7/8 [200]	9-3/8 [238]		10 [5]
8BW	9-7/8 [251]	11 [279]	2-1/2 [64]	
Inside Caulk (IC)				
2IC	2-3/4 [70]	4 [102]	3-3/8 [86]	6 [3]
3IC	3-1/2 [89]	4-7/8 [124]		
4IC	4-1/2 [114]	6 [152]		
6IC	7-7/8 [200]	9-3/8 [238]		10 [5]

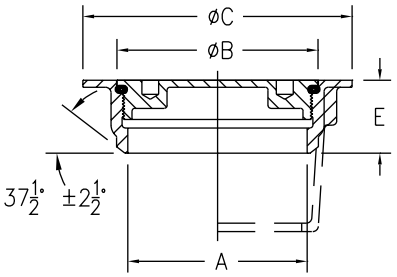

PREFIXES	DESCRIPTION	A PIPE SIZE	LIST PRICE
Z1745*	Type 304 (CF8) Stainless Steel Body	2″, 3″, 4″	**3,709.00**
		6″, 8″	**4,216.00**
ZM1745	Type 316 (CF8M) Stainless Steel Body	2″, 3″, 4″	**4,207.00**
		6″, 8″	**4,771.00**

OUTLETS (SPECIFY PIPE SIZE IN INCHES AND TYPE OF OUTLET)

OUTLET TYPE		PIPE SIZE/OUTLET TYPE	E BODY HT. DIM.	ADD
BW	Butt-weld (Specify Schedule 10 or 40)	2BW, 3BW, 4BW, 6BW	1-5/8″	**N/C**
		8BW	2-1/2″	**N/C**
IC	Inside Caulk	2IC, 3IC, 4IC, 6IC	3-3/8″	**N/C**

SUFFIXES		ADD
–SW	Bronze Spanner Wrench	**158.00**

BEST SELLERS	LIST PRICE
Z1745-2IC	**POA**
Z1745-3IC	**POA**
Z1745-4IC	**POA**

For additional product information, please visit www.zurn.com

**Regularly furnished unless otherwise specified.*
Items designated as Best Sellers are most specified and are generally in stock for shipment.
This symbol denotes a product that is engineered to reduce installation and rework time.

Z1749 12" X 12" SANI-FLOR RECEPTOR WITH 4" SUMP DEPTH

ENGINEERING SPECIFICATION

Zurn Z1749 12" x 12" x 4" light-duty Sani-Flor receptor features deep, 16 gage, all Type 304 (CF8) stainless steel, non-tilt, loose set, full grate with 1/2" square openings, and anti-splash stainless steel interior dome strainer.

Dimensions in inches [mm]		Approximate Weight lb [kg]	Grate Open Area sq in [cm²]
A	E		
No-Hub (NH)			
2NH, 3NH, 4NH	6-1/16 [154]	15 [7]	23 [148]
Neo-Loc (NL)			
2NL, 3NL, 4NL	5-13/16 [148]	15 [7]	23 [148]

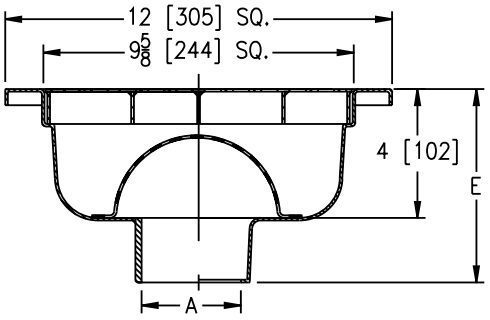

PREFIXES	DESCRIPTION	A PIPE SIZE	LIST PRICE
Z1749*	Type 304 (CF8) Stainless Steel Body	2", 3", 4"	3,151.00
ZM1749	Type 316 (CF8M) Stainless Steel Body	2", 3", 4"	POA

OUTLETS (SPECIFY PIPE SIZE IN INCHES AND TYPE OF OUTLET)				
OUTLET TYPE		PIPE SIZE/OUTLET TYPE	E BODY HT. DIM.	ADD
NH	No-Hub	2NH, 3NH, 4NH	6-1/16"	N/C
NL	Neo-Loc	2NL, 3NL, 4NL	5-13/16"	N/C

SUFFIXES		ADD
–DX	Dex-O-Tex Flange	1,660.00
–HD	Extra-Heavy-Duty Top Frame and Grate	1,945.00
–HP	Heel-Proof Grate	467.00
–K	Anchor Flange (May not be used with –P)	574.00
–KC	Anchor Flange with Seepage Holes and Clamp Collar (May not be used with –P)	1,080.00
–P	1/2" Trap Primer Connection (May not be used with –K or –KC)	257.00
–SG	Solid Gasketed Cover	POA
◷ –TC	Neo-Loc Test Cap Gasket (2" thru 4" NL Bottom Outlet Only)	76.00
–VP	Vandal-Proof Secured Top	670.00
–Y	Sediment Bucket	435.00
–YS	Suspended Sediment Bucket	648.00
–2	1/2 Grate	N/C
–3	3/4 Grate	N/C
–4	Full Grate with 3" Square Opening	187.00
–5	Grate with 4" Dia. X 3-3/4" High Funnel	1,276.00
–8	Grate with 8-3/8" x 3-5/8 x 3-3/4" High Oval Funnel	1,584.00
–15	Solid Cover	242.00
–16	1/2 Solid Cover	242.00
–19	Full Hinged Grate	POA
–20	Full Hinged Cover	POA
		DEDUCT
–1	Less Grate	-424.00

BEST SELLERS	LIST PRICE
Z1749-3NH	POA
Z1749-3NL-2	POA
Z1749-4NH	POA
Z1749-4NH-HD	POA

**Regularly furnished unless otherwise specified.*

Items designated as Best Sellers are most specified and are generally in stock for shipment.

◷ This symbol denotes a product that is engineered to reduce installation and rework time.

For additional product information, please visit www.zurn.com

Z1750 12″ X 12″ SANI-FLOR RECEPTOR WITH 6″ SUMP DEPTH

ENGINEERING SPECIFICATION

Zurn Z1750 12″ x 12″ x 6″ deep light-duty Sani-Flor receptor features 16 gage, all Type 304 (CF8) stainless steel, non-tilt, loose set, full grate with 1/2″ square openings, and anti-splash stainless steel interior dome strainer.

Dimensions in inches [mm]		Approximate Weight lb [kg]	Grate Open Area sq in [cm²]
A	E		
Inside Caulk (IC)			
3IC, 4IC	8-9/16 [217]	15 [7]	23 [148]
No-Hub (NH)			
2NH, 3NH, 4NH	8-1/16 [205]	15 [7]	23 [148]
6NH		17 [8]	23 [148]
Neo-Loc (NL)			
3NL, 4NL	7-13/16 [198]	15 [7]	23 [148]

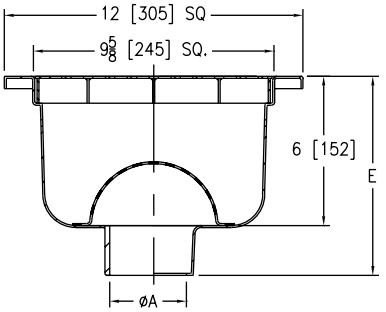

PREFIXES	DESCRIPTION	A PIPE SIZE	LIST PRICE
Z1750*	Type 304 (CF8) Stainless Steel Body	2″, 3″, 4″	3,926.00
		6″	4,573.00
ZM1750	Type 316 (CF8M) Stainless Steel Body	2″, 3″, 4″	POA
		6″	POA

OUTLETS (SPECIFY PIPE SIZE IN INCHES AND TYPE OF OUTLET)

OUTLET TYPE		PIPE SIZE/OUTLET TYPE	E BODY HT. DIM.	ADD
IC	Inside Caulk	3IC, 4IC	8-9/16″	N/C
NH	No-Hub	2NH, 3NH, 4NH, 6NH	8-1/16″	N/C
NL	Neo-Loc	3NL, 4NL	7-13/16″	N/C

SUFFIXES		ADD
–DX	Dex-O-Tex Flange	1,660.00
–HD	Extra-Heavy-Duty Grate	1,945.00
–HP	Heel-Proof Grate	467.00
–K	Anchor Flange	574.00
–KC	Anchor Flange with Seepage Holes and Clamp Collar	1,080.00
–P	1/2″ Trap Primer Connection	257.00
–SG	Solid Gasketed Cover	POA
◷ –TC	Neo-Loc Test Cap Gasket (3″, 4″ NL Bottom Outlet Only)	76.00
–VP	Vandal-Proof Secured Top	670.00
–Y	Sediment Bucket	435.00
–YS	Suspended Sediment Bucket	648.00
–2	1/2 Grate	N/C
–3	3/4 Grate	N/C
–4	Full Grate with 3″ Square Opening	187.00
–5	Grate with 4″ Dia. X 3-3/4″ High Funnel	1,276.00
–8	Grate with 8-3/8″ x 3-5/8 x 3-3/4″ High Oval Funnel	1,584.00
–15	Solid Cover	242.00
–16	1/2 Solid Cover	242.00
–19	Full Hinged Grate	POA
–20	Full Hinged Solid Cover	POA
		DEDUCT
–1	Less Grate	-424.00

BEST SELLERS	LIST PRICE
Z1750-2NH	POA
Z1750-3NH	POA
Z1750-3NH-2-Y	POA
Z1750-3NL	POA
Z1750-3NL-3-KC	POA
Z1750-4NH	POA
Z1750-4NH-2	POA
Z1750-4NH-2-KC	POA

For additional product information, please visit www.zurn.com

**Regularly furnished unless otherwise specified.*

Items designated as Best Sellers are most specified and are generally in stock for shipment.

◷ This symbol denotes a product that is engineered to reduce installation and rework time.

Z1751 12″ X 12″ SANI-FLOR RECEPTOR WITH 8″ SUMP DEPTH

ENGINEERING SPECIFICATION

Zurn Z1751 12″ x 12″ x 8″ deep light-duty Sani-Flor receptor features 16 gage, all Type 304 (CF8) stainless steel, non-tilt, loose set, full grate with 1/2″ square openings, and anti-splash stainless steel interior dome strainer.

Dimensions in inches [mm]		Approximate Weight lb [kg]	Grate Open Area sq in [cm²]
A	E		
Inside Caulk (IC)			
3IC, 4IC	10-9/16 [268]	19 [9]	23 [148]
No-Hub (NH)			
2NH, 3NH, 4NH	10-1/16 [256]	19 [9]	23 [148]
6NH		21 [10]	23 [148]
Neo-Loc (NL)			
2NL, 3NL, 4NL	9-13/16 [249]	19 [9]	23 [148]

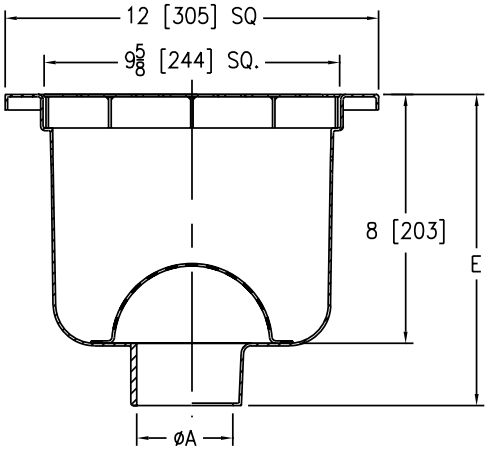

PREFIXES	DESCRIPTION	A PIPE SIZE	LIST PRICE
Z1751*	Type 304 (CF8) Stainless Steel Body	2″, 3″, 4″	4,110.00
		6″	4,752.00
ZM1751	Type 316 (CF8M) Stainless Steel Body	2″, 3″, 4″	POA
		6″	POA

OUTLETS (SPECIFY PIPE SIZE IN INCHES AND TYPE OF OUTLET)

OUTLET TYPE		PIPE SIZE/OUTLET TYPE	E BODY HT. DIM.	ADD
IC	Inside Caulk	3IC, 4IC	10-9/16″	N/C
NH	No-Hub	2NH, 3NH, 4NH, 6NH	10-1/16″	N/C
NL	Neo-Loc	2NL, 3NL, 4NL	9-13/16″	N/C

SUFFIXES		ADD
–DX	Dex-O-Tex Flange	1,660.00
–HD	Extra-Heavy-Duty Grate	1,945.00
–HP	Heel-Proof Grate	467.00
–K	Anchor Flange	574.00
–KC	Anchor Flange with Seepage Holes and Clamp Collar	1,080.00
–P	1/2″ Trap Primer Connection	257.00
–SG	Solid Gasketed Cover	POA
⏲ –TC	Neo-Loc Test Cap Gasket (2″, 3″, 4″ NL Bottom Outlet Only)	76.00
–VP	Vandal-Proof Secured Top	670.00
–Y	Sediment Bucket	435.00
–YS	Suspended Sediment Bucket	648.00
–2	1/2 Grate	N/C
–3	3/4 Grate	N/C
–4	Full Grate with 3″ Square Opening	187.00
–5	Grate with 4″ Dia. X 3-3/4″ High Funnel	1,276.00
–8	Grate with 8-3/8″ x 3-5/8 x 3-3/4″ High Oval Funnel	1,584.00
–15	Solid Cover	242.00
–16	1/2 Solid Cover	242.00
–19	Full Hinged Grate	POA
–20	Full Hinged Solid Cover	POA
		DEDUCT
–1	Less Grate	-424.00

BEST SELLERS	LIST PRICE
Z1751-2NH	POA
Z1751-2NH-2	POA
Z1751-3NH-2	POA
Z1751-4NH	POA
Z1751-4NH-2	POA

**Regularly furnished unless otherwise specified.*

Items designated as Best Sellers are most specified and are generally in stock for shipment.

⏲ This symbol denotes a product that is engineered to reduce installation and rework time.

For additional product information, please visit www.zurn.com

Z1752 12″ X 12″ SANI-FLOR RECEPTOR WITH 10″ SUMP DEPTH

ENGINEERING SPECIFICATION

Zurn Z1752 12″ x 12″ x 10″ deep light-duty Sani-Flor receptor features 16 gage, all Type 304 (CF8) stainless steel, non-tilt, loose set, full grate with 1/2″ square openings, and anti-splash stainless steel interior dome strainer.

Dimensions in inches [mm]		Approximate Weight lb [kg]	Grate Open Area sq in [cm²]
A	E		
No-Hub (NH)			
2NH, 3NH, 4NH	12-1/16 [306]	22 [10]	23 [148]
6NH		23 [10]	23 [148]
Neo-Loc (NL)			
2NL, 3NL, 4NL	11-13/16 [300]	22 [10]	23 [148]

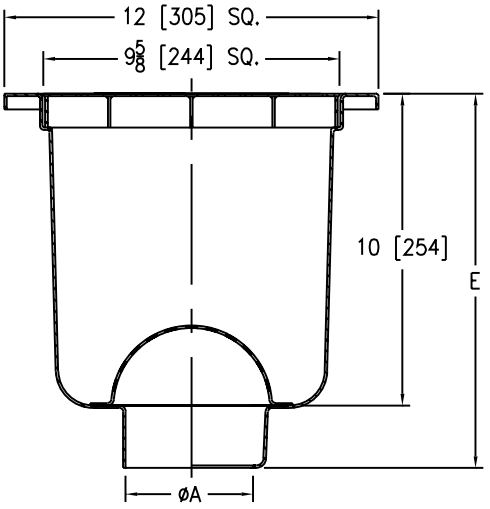

PREFIXES	DESCRIPTION	A PIPE SIZE	LIST PRICE
Z1752*	Type 304 (CF8) Stainless Steel Body	2″, 3″, 4″	4,451.00
		6″	5,214.00
ZM1752	Type 316 (CF8M) Stainless Steel Body	2″, 3″, 4″	POA
		6″	POA

OUTLETS (SPECIFY PIPE SIZE IN INCHES AND TYPE OF OUTLET)				
OUTLET	TYPE	PIPE SIZE/OUTLET TYPE	E BODY HT. DIM.	ADD
NH	No-Hub	2NH, 3NH, 4NH, 6NH	12-1/16″	N/C
NL	Neo-Loc	2NL, 3NL, 4NL	11-13/16″	N/C

SUFFIXES		ADD
–DX	Dex-O-Tex Flange	1,660.00
–HD	Extra-Heavy-Duty Grate	1,945.00
–HP	Heel-Proof Grate	467.00
–K	Anchor Flange	574.00
–KC	Anchor Flange with Seepage Holes and Clamp Collar	1,080.00
–P	1/2″ Trap Primer Connection	257.00
–SG	Solid Gasketed Cover	POA
◷ –TC	Neo-Loc Test Cap Gasket (2″, 3″, 4″ NL Bottom Outlet Only)	76.00
–VP	Vandal-Proof Secured Top	670.00
–Y	Sediment Bucket	435.00
–YS	Suspended Sediment Bucket	648.00
–2	1/2 Grate	N/C
–3	3/4 Grate	N/C
–4	Full Grate with 3″ Square Opening	187.00
–5	Grate with 4″ Dia. X 3-3/4″ High Funnel	1,276.00
–8	Grate with 8-3/8″ x 3-5/8 x 3-3/4″ High Oval Funnel	1,584.00
–15	Solid Cover	242.00
–16	1/2 Solid Cover	242.00
–19	Full Hinged Grate	POA
–20	Full Hinged Solid Cover	POA
		DEDUCT
–1	Less Grate	-424.00

BEST SELLERS	LIST PRICE
Z1752-2NH-2-KC-YS	POA
Z1752-3NH	POA
Z1752-3NH-2-KC	POA
Z1752-4NH	POA
Z1752-4NL	POA
Z1752-4NL-2-HD	POA

For additional product information, please visit www.zurn.com

**Regularly furnished unless otherwise specified.*

Items designated as Best Sellers are most specified and are generally in stock for shipment.

◷ This symbol denotes a product that is engineered to reduce installation and rework time.

Z1755 13-3/8″ SQUARE SANI-FLOR RECEPTOR 6″ SUMP WITH ADJUSTABLE CLAMP FRAME

Patented

ENGINEERING SPECIFICATION

Zurn Z1755 13-3/8″ square x 6″ deep light-duty Sani-Flor receptor features 16 gage, all Type 304 (CF8) fabricated stainless steel, integral flooring clamp frame, and non-tilt loose set, full grate with interior dome strainer for unlevel floor installations.

Dimensions in inches [mm]		Approximate Weight lb [kg]	Grate Open Area sq in [cm²]
A	E		
No-Hub (NH)			
2NH, 3NH, 4NH	8 [203]	10 [5]	25 [161]

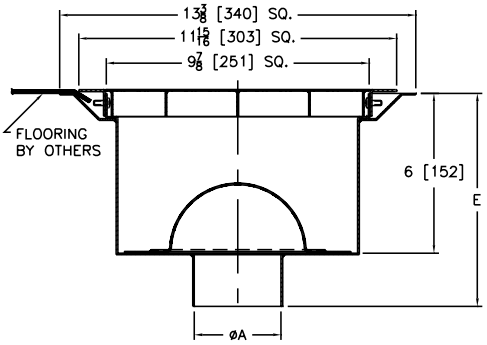

PREFIXES	DESCRIPTION	A PIPE SIZE	LIST PRICE
Z1755*	Type 304 (CF8) Stainless Steel Body	2″, 3″, 4″	13,378.00
ZM1755	Type 316 (CF8M) Stainless Steel Body	2″, 3″, 4″	POA
OUTLETS (SPECIFY PIPE SIZE IN INCHES AND TYPE OF OUTLET)			
OUTLET TYPE		PIPE SIZE/OUTLET TYPE	E BODY HT. DIM. / ADD
NH	No-Hub	2NH, 3NH, 4NH	8″ / N/C
SUFFIXES			ADD
–P	1/2″ Trap Primer Connection		257.00
–2	1/2 Grate		N/C
–3	3/4 Grate		N/C
BEST SELLERS			LIST PRICE
Z1755-3NH			POA
Z1755-3NH-2			POA
Z1755-4NH-2			POA

Z1761 24-5/16″ SQUARE KETTLE DRAIN WITH 8″ SUMP DEPTH

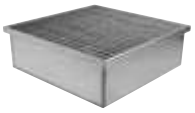

ENGINEERING SPECIFICATION

Zurn ZS1761 24-5/16″ x 24-5/16″ x 8″ deep light-duty square kettle drain features 14 gage, all Type 304 (CF8) stainless steel, and loose set full grate.

Dimensions in inches [mm]	Approximate Weight lb [kg]	Grate Open Area sq in [cm²]
A Pipe Size		
No-Hub (NH)		
4NH, 6NH, 8NH	72 [33]	425 [2742]

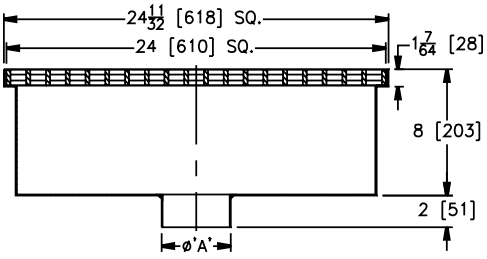

PREFIXES	DESCRIPTION	A PIPE SIZE	LIST PRICE
ZS1761*	Type 304 (CF8) Stainless Steel Body and Grate	4″, 6″, 8″	21,434.00
Z1761	A.R.E. Coated Fabricated Steel Body and Type 304 (CF8) Stainless Steel Grate	4″, 6″, 8″	17,380.00
ZM1761	Type 316 (CF8M) Stainless Steel Body and Grate	4″, 6″, 8″	POA
OUTLETS (SPECIFY PIPE SIZE IN INCHES AND TYPE OF OUTLET)			
OUTLET TYPE		PIPE SIZE/OUTLET TYPE	ADD
NH	No-Hub	4NH, 6NH, 8NH	N/C
SUFFIXES			ADD
–PB	Perforated Sediment Bucket		POA
SEE LEGACY ADDENDUM ON PAGE 369 FOR MORE INFORMATION			

*Regularly furnished unless otherwise specified.

Items designated as Best Sellers are most specified and are generally in stock for shipment.

This symbol denotes a product that is engineered to reduce installation and rework time.

Z1762 25" X 15-1/2" KETTLE DRAIN

ENGINEERING SPECIFICATION

Zurn ZS1762 25" x 15-1/2" kettle drain features Type 304 (CF8) stainless steel fabricated body and stainless steel two-piece grate with 1/8" bars on 3/8" center. One grate section comes with lift hole.

Dimensions in inches [mm]		Approximate Weight lb [kg]	Grate Open Area sq in [cm²]
A	R		
No-Hub (NH)			
3NH, 4NH	7-7/8 [200]	71 [32]	149 [961]
6NH	6-7/8 [175]		

PREFIXES	DESCRIPTION	A PIPE SIZE	LIST PRICE
Z1762	Acid Resistant Epoxy Coated Steel Body with Stainless Steel Top	3", 4"	23,663.00
		6"	23,663.00
ZS1762*	All Type 304 Fabricated Stainless Steel Body with Stainless Steel	3", 4"	27,928.00
		6"	27,928.00
OUTLETS (SPECIFY PIPE SIZE IN INCHES AND TYPE OF OUTLET)			
OUTLET TYPE		PIPE SIZE/OUTLET TYPE	ADD
NH	No-Hub	3NH, 4NH, 6NH	N/C
SUFFIXES			ADD
–SB	Solids Retaining Baffle		N/C

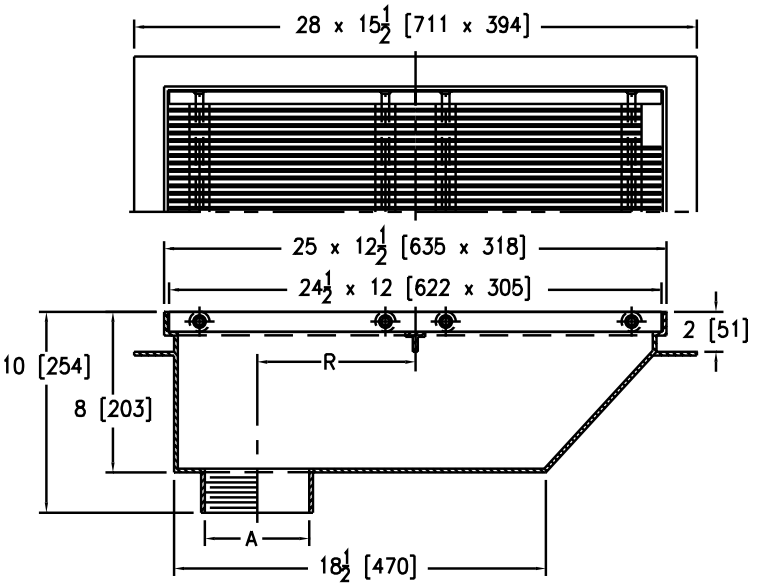

Z1763 37-9/16" X 22-7/8" KETTLE DRAIN

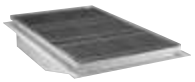

ENGINEERING SPECIFICATION

Zurn ZS1763 37-9/16" x 22-7/8" kettle drain features Type 304 (CF8) stainless steel fabricated body and stainless steel three-piece grate with 1/8" bars on 3/8" center. One grate section comes with lift hole.

Dimensions in inches [mm]		Approximate Weight lb [kg]	Grate Open Area sq in [cm²]
A	R		
No-Hub (NH)			
3NH, 4NH	14 [356]	125 [57]	420 [2709]
6NH	13 [330]		
8NH	12 [305]		
10NH	11 [279]		
12NH	10 [254]		

PREFIXES	DESCRIPTION	A PIPE SIZE	LIST PRICE
ZS1763*	All Type 304 Fabricated Stainless Steel Body with Stainless Steel	3", 4"	39,380.00
		6"	39,380.00
		8"	39,380.00
		10"	39,380.00
		12"	39,380.00
Z1763	Acid Resistant Epoxy Coated Steel Body with Stainless Steel Top	3", 4"	33,361.00
		6"	33,361.00
		8"	33,361.00
		10"	33,361.00
		12"	33,361.00

OUTLETS (SPECIFY PIPE SIZE IN INCHES AND TYPE OF OUTLET)			
OUTLET TYPE		PIPE SIZE/OUTLET TYPE	ADD
NH	No-Hub	3NH, 4NH, 6NH, 8NH, 10NH, 12NH	N/C

SUFFIXES		ADD
–SB	Solids Retaining Baffle	N/C

BEST SELLER	LIST PRICE
ZS1763-4NH	POA

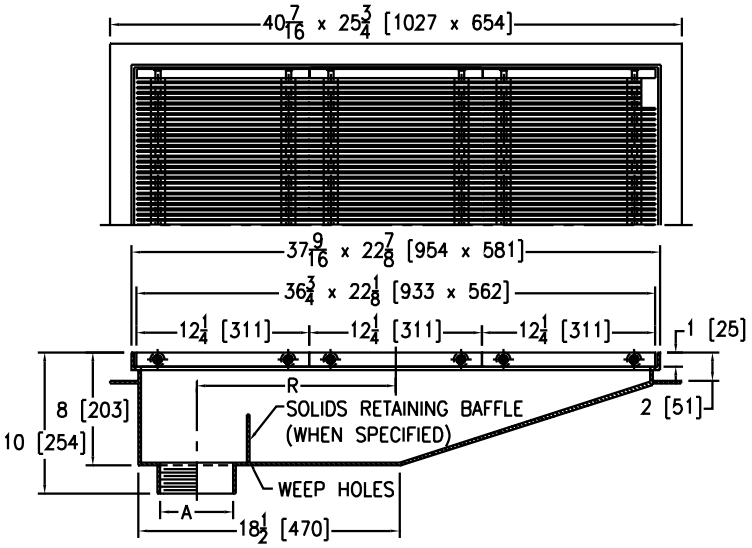

*Regularly furnished unless otherwise specified.

Items designated as Best Sellers are most specified and are generally in stock for shipment.

This symbol denotes a product that is engineered to reduce installation and rework time.

For additional product information, please visit www.zurn.com

NOTES

FABRICATED STAINLESS STEEL DRAINS

ZS880 STAINLESS STEEL LINEAR SHOWER DRAIN	**334**
Z1800-6B 6" DIAMETER INDUSTRIAL FLOOR DRAIN 4-19/32" SUMP DEPTH	**335**
Z1800-8B 8" DIAMETER INDUSTRIAL FLOOR DRAIN 6" SUMP DEPTH	**336**
Z1800-8S 8" X 8" INDUSTRIAL FLOOR DRAIN 6" SUMP DEPTH	**336**
Z1800-12B 12" DIAMETER INDUSTRIAL FLOOR DRAIN 6" SUMP DEPTH	**337**
Z1800-12S 12" X 12" INDUSTRIAL FLOOR DRAIN 6" SUMP DEPTH	**337**
Z1810-6B 6" DIAMETER ADJUSTABLE INDUSTRIAL FLOOR DRAIN	**338**
Z1810-8B 8" DIAMETER ADJUSTABLE INDUSTRIAL FLOOR DRAIN	**338**
Z1810-8S 8" X 8" ADJUSTABLE INDUSTRIAL FLOOR DRAIN	**339**
Z1810-12B 12" DIAMETER ADJUSTABLE INDUSTRIAL FLOOR DRAIN	**339**
Z1810-12S 12" X 12" ADJUSTABLE INDUSTRIAL FLOOR DRAIN	**340**
Z1820-8B 8" DIAMETER INDUSTRIAL FLOOR DRAIN WITH SIDE OUTLET	**340**
Z1820-8S 8" X 8" INDUSTRIAL FLOOR DRAIN WITH SIDE OUTLET	**341**
Z1820-12B 12" DIAMETER INDUSTRIAL FLOOR DRAIN WITH SIDE OUTLET	**341**
Z1820-12S 12" X 12" INDUSTRIAL FLOOR DRAIN WITH SIDE OUTLET	**342**
Z1830-8B 8" DIAMETER INDUSTRIAL FLOOR DRAIN 8" SUMP DEPTH	**342**
Z1830-8S 8" X 8" DIAMETER INDUSTRIAL FLOOR DRAIN 8" SUMP DEPTH	**343**
Z1830-12B 12" DIAMETER INDUSTRIAL FLOOR DRAIN 8" SUMP DEPTH	**343**
Z1830-12S 12" X 12" INDUSTRIAL FLOOR DRAIN 8" SUMP DEPTH	**344**
Z1840-6B 6" DIAMETER INDUSTRIAL FLOOR CLEANOUT	**344**
Z1840-6S 6" X 6" INDUSTRIAL FLOOR CLEANOUT	**345**
Z1840-8B 8" DIAMETER INDUSTRIAL FLOOR CLEANOUT	**345**
Z1840-8S 8" X 8" INDUSTRIAL FLOOR CLEANOUT	**346**

ZS880 STAINLESS STEEL LINEAR SHOWER DRAIN

ENGINEERING SPECIFICATION

ZS880 all Type 304 (CF8) fabricated stainless steel linear shower drain comes complete with vertically adjustable anchoring support legs, anti-ponding V-shaped channel with 2″ no-hub outlet, adjustable secured leveling frame with integral tiling edge, and secured, light-duty, slotted heel-proof grate.

Product Designation	Dimensions in inches [mm]		Grate Open Area sq in [cm²]	Approximate Weight lb [kg]
	A	B		
-12	12 [305]	14 [356]	6 [39]	2.9 [1.3]
-28	28 [711]	30 [762]	15 [97]	5.4 [2.5]
-32	32 [813]	34 [864]	18 [116]	5.9 [2.7]
-36	36 [914]	38 [965]	20 [129]	6.4 [2.9]
-40	40 [1016]	42 [1067]	22 [142]	7.2 [3.3]
-48	48 [1219]	50 [1270]	27 [174]	8.4 [3.8]
-60	60 [1524]	62 [1575]	34 [219]	10.3 [4.7]
-72	72 [1829]	74 [1880]	41 [265]	12.4 [5.6]

-LS Linear Slotted Grate

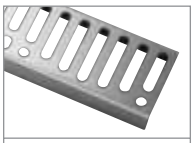

-WG Wave Grate

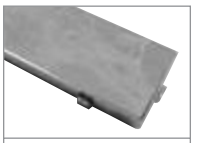

-TG Tile Inlay Grate (Tile by other)

-BW Basket Weave Grate

-DB Decorative Block Grate

-SG Serenity Grate

PREFIXES	DESCRIPTION	PRODUCT DESIG.	TRENCH LENGTH	LIST PRICE
ZS880*	Type 304 (CF8) Stainless Steel	-12	12″	POA
		-28	28″	POA
		-32	32″	POA
		-36	36″	POA
		-40	40″	POA
		-48	48″	POA
		-60	60″	POA
		-72	72″	POA
ZR880	Type 304 (CF8) Stainless Steel with Oil-Rubbed Bronze Finish	-12	12″	POA
		-28	28″	POA
		-32	32″	POA
		-36	36″	POA
		-40	40″	POA
		-48	48″	POA
		-60	60″	POA
		-72	72″	POA
OPTIONS				
STANDARD GRATE OPTIONS				**ADD**
–LS*	Linear Slotted			N/C
DECORATIVE GRATE OPTIONS		**PRODUCT DESIG.**		**ADD**
–BW	Basket Weave	-12, -28, -32, -36, -40, -48, -60, -72		POA
–DB	Decorative Block Grate	-12, -28, -32, -36, -40, -48, -60, -72		POA
–SG	Serenity Grate	-12, -28, -32, -36, -40, -48, -60, -72		POA
–TG	Tile Inlay Grate	-12, -28, -32, -36, -40, -48, -60, -72		POA
–WG	Slotted Wave Grate	-12, -28, -32, -36, -40, -48, -60, -72		POA
OUTLET ADAPTERS				**ADD**
–2	Two-Outlet Drain Body			POA
–2IP	2″ Female Threaded Outlet (Add Per Outlet Connection)			POA
–3	Three-Outlet Drain Body			POA
–EO	End Outlet			POA
–FS	Outlet Filter Screen			POA
–LB	Lower Drain Body			POA
–SO	2″ No-Hub Side Outlet (Add Per Outlet Connection)			POA

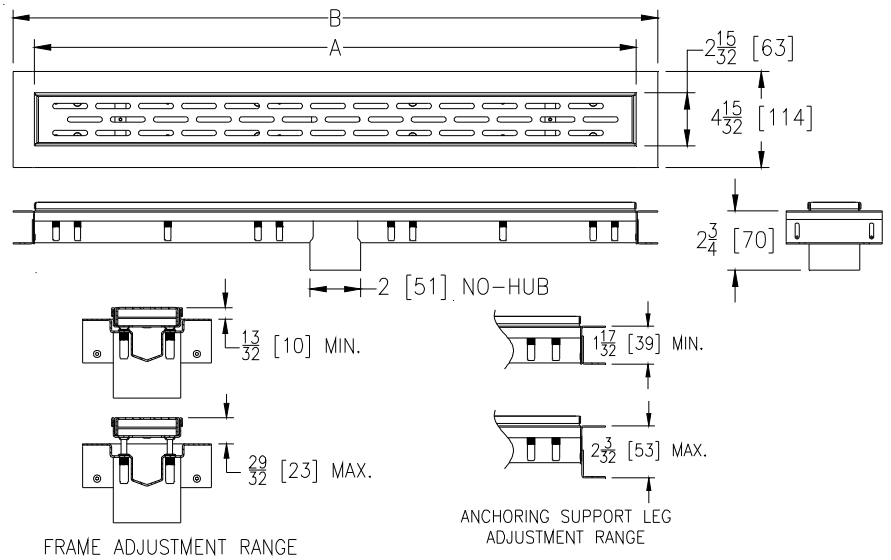

For additional product information, please visit www.zurn.com

**Regularly furnished unless otherwise specified.*

Items designated as Best Sellers are most specified and are generally in stock for shipment.

This symbol denotes a product that is engineered to reduce installation and rework time.

Z1800-6B 6″ DIAMETER INDUSTRIAL FLOOR DRAIN 4-19/32″ SUMP DEPTH

ENGINEERING SPECIFICATION

Zurn Z1800-6B 6″ diameter x 4-19/32″ deep, 18 gauge, all Type 304 (CF8) stainless steel, round, industrial floor drain features loose set, anti-tilt, medium-duty, perforated grate, reinforced top frame, perforated, removable sediment bucket with lift handle, pre-sloped bottom sump, and pre-pour stabilizing anchor tabs.

Dimensions in inches [mm]		Approximate Weight lb [kg]	Grate Open Area sq in [cm²]
A Pipe Size inches [mm]	E Body Height Dimensions		
Butt-Weld (SCH 10) / No-Hub			
2 [51]	6-13/16 [173]	5 [2]	5.8 [37]
3 [76]	6-27/32 [174]		
4 [102]	6-25/32 [172]		

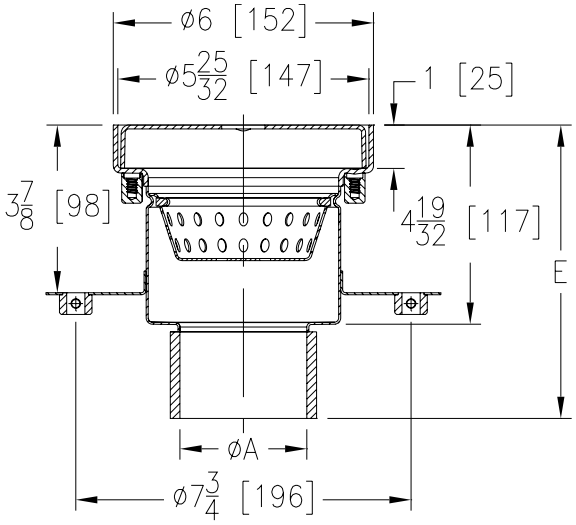

PREFIXES	DESCRIPTION		A PIPE SIZE	LIST PRICE
Z1800-6B*	Type 304 (CF8) Stainless Steel*		2″, 3″, 4″	POA
ZM1800-6B	Type 316 (CF8M) Stainless Steel		2″, 3″, 4″	POA
OUTLETS (SPECIFY PIPE SIZE IN INCHES AND TYPE OF OUTLET)				
OUTLET TYPE		PIPE SIZE/ OUTLET TYPE	'E' BODY HT. DIM.	ADD
BW	Butt-Weld (SCH-10)	2BW	6-13/16″	N/C
		3BW	6-27/32″	N/C
		4BW	6-25/32″	N/C
NH	No-Hub	2NH	6-13/16″	N/C
		3NH	6-27/32″	N/C
		4NH	6-25/32″	N/C

SUFFIXES	DESCRIPTION	ADD
–KC	Anchor Flange with Seepage Holes and Clamp Collar	POA
–P	1/2″ Trap Primer Connection	POA
◷ –SA	Stabilizer Assembly (See Z1035)	138.00
◷ –SQ	Stabilizer Q-Deck (See Z1035-Q)	184.00
–TS	Top Secured Grate	POA
–2PT	2″ Stainless Steel P-Trap	POA
–3PT	3″ Stainless Steel P-Trap	POA
–4PT	4″ Stainless Steel P-Trap	POA

**Regularly furnished unless otherwise specified.*

Items designated as Best Sellers are most specified and are generally in stock for shipment.

◷ This symbol denotes a product that is engineered to reduce installation and rework time.

For additional product information, please visit www.zurn.com

Z1800-8B 8″ DIAMETER INDUSTRIAL FLOOR DRAIN 6″ SUMP DEPTH

ENGINEERING SPECIFICATION

Zurn Z1800-8B 8″ diameter x 6″ deep, 18 gauge, all Type 304 (CF8) stainless steel, round, industrial floor drain features loose set, anti-tilt, heavy-duty, perimeter drainage cover, reinforced top frame, perforated, removable sediment bucket with lift handle, pre-sloped bottom sump, and pre-pour stabilizing anchor tabs.

A Pipe Size inches [mm]	Approximate Weight lb [kg]	Grate Open Area sq in [cm²]
Butt-Weld (SCH 10) / No-Hub		
2 [51], 3 [76], 4 [102]	7 [3]	6.1 [39]

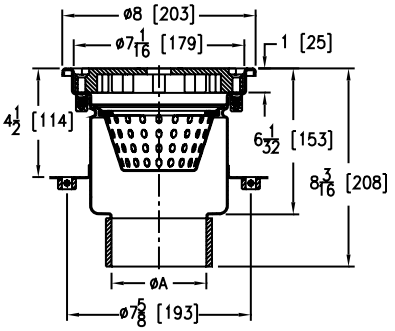

PREFIXES	DESCRIPTION	A PIPE SIZE	LIST PRICE
Z1800-8B*	Type 304 (CF8) Stainless Steel*	2″, 3″, 4″	POA
ZM1800-8B	Type 316 (CF8M) Stainless Steel	2″, 3″, 4″	POA
OUTLETS (SPECIFY PIPE SIZE IN INCHES AND TYPE OF OUTLET)			
OUTLET TYPE		PIPE SIZE/ OUTLET TYPE	ADD
BW	Butt-Weld (SCH-10)	2BW, 3BW, 4BW	N/C
NH	No-Hub	2NH, 3NH, 4NH	N/C
GRATE OPTIONS	DESCRIPTION		ADD
-GCH	Heavy-Duty Gas Tight Solid Cover		POA
-PCX	Extra-Heavy-Duty Perimeter Drainage Cover (6.1 Sq. In. Open Area)		POA
			DEDUCT
-PGM	Medium-Duty Perforated Grate (9.9 Sq. In. Open Area)		POA
-SGH	Heavy-Duty Slotted Grate (11.2 Sq. In. Open Area)		POA
-SGM	Medium-Duty Slotted Grate (11.2 Sq. In. Open Area)		POA
SUFFIXES	DESCRIPTION		ADD
–B	Bell Trap/Solid Sediment Bucket		POA
–KC	Anchor Flange with Seepage Holes and Clamp Collar		POA
–P	1/2″ Trap Primer Connection		POA
–SA	Stabilizer Assembly (See Z1035)		138.00
–SQ	Stabilizer Q-Deck (See Z1035-Q)		184.00
–TS	Top Secured Grate		POA
–VH	Vacuum Handle (-GCH Cover Only)		POA
–2PT	2″ Stainless Steel P-Trap		POA
–3PT	3″ Stainless Steel P-Trap		POA
–4PT	4″ Stainless Steel P-Trap		POA
BEST SELLER			LIST PRICE
Z1800-8B-4NH			POA

Z1800-8S 8″ X 8″ INDUSTRIAL FLOOR DRAIN 6″ SUMP DEPTH

ENGINEERING SPECIFICATION

Zurn Z1800-8S 8″ x 8″ x 6″ deep, 18 gauge, all Type 304 (CF8) stainless steel, square, industrial floor drain features loose set, anti-tilt, heavy-duty, perimeter drainage cover, reinforced top frame, perforated, removable sediment bucket with lift handle, pre-sloped bottom sump, and pre-pour stabilizing anchor tabs.

A Pipe Size inches [mm]	Approximate Weight lb [kg]	Grate Open Area sq in [cm²]
Butt-Weld (SCH 10) / No-Hub		
2 [51], 3 [76], 4 [102]	10 [5]	6.1 [39]

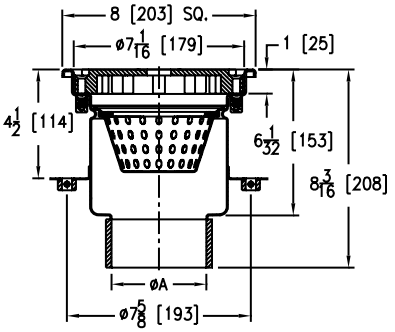

PREFIXES	DESCRIPTION	A PIPE SIZE	LIST PRICE
Z1800-8S*	Type 304 (CF8) Stainless Steel*	2″, 3″, 4″	POA
ZM1800-8S	Type 316 (CF8M) Stainless Steel	2″, 3″, 4″	POA
OUTLETS (SPECIFY PIPE SIZE IN INCHES AND TYPE OF OUTLET)			
OUTLET TYPE		PIPE SIZE/ OUTLET TYPE	ADD
BW	Butt-Weld (SCH-10)	2BW, 3BW, 4BW	N/C
NH	No-Hub	2NH, 3NH, 4NH	N/C
GRATE OPTIONS	DESCRIPTION		ADD
-GCH	Heavy-Duty Gas Tight Solid Cover		POA
-PCX	Extra-Heavy-Duty Perimeter Drainage Cover (6.1 Sq. In. Open Area)		POA
			DEDUCT
-PGM	Medium-Duty Perforated Grate (9.9 Sq. In. Open Area)		POA
-SGH	Heavy-Duty Slotted Grate (11.2 Sq. In. Open Area)		POA
-SGM	Medium-Duty Slotted Grate (11.2 Sq. In. Open Area)		POA
SUFFIXES	DESCRIPTION		ADD
–B	Bell Trap/Solid Sediment Bucket		POA
–KC	Anchor Flange with Seepage Holes and Clamp Collar		POA
–P	1/2″ Trap Primer Connection		POA
–SA	Stabilizer Assembly (See Z1035)		138.00
–SQ	Stabilizer Q-Deck (See Z1035-Q)		184.00
–TS	Top Secured Grate		POA
–VH	Vacuum Handle (-GCH Cover Only)		POA
–2PT	2″ Stainless Steel P-Trap		POA
–3PT	3″ Stainless Steel P-Trap		POA
–4PT	4″ Stainless Steel P-Trap		POA

For additional product information, please visit www.zurn.com

**Regularly furnished unless otherwise specified.*

Items designated as Best Sellers are most specified and are generally in stock for shipment.

This symbol denotes a product that is engineered to reduce installation and rework time.

Z1800-12B 12″ DIAMETER INDUSTRIAL FLOOR DRAIN 6″ SUMP DEPTH

ENGINEERING SPECIFICATION

Zurn Z1800-12B 12″ diameter x 6″ deep, 18 gauge, all Type 304 (CF8) stainless steel, round, industrial floor drain features loose set, anti-tilt, extra heavy-duty, perimeter drainage cover, reinforced top frame, perforated, removable sediment bucket with lift handle, presloped bottom sump, and pre-pour stabilizing anchor tabs.

A Pipe Size inches [mm]	Approximate Weight lb [kg]	Grate Open Area sq in [cm²]
Butt-Weld (SCH 10) / No-Hub		
3 [76], 4 [102], 6 [152]	17 [8]	9.7 [63]

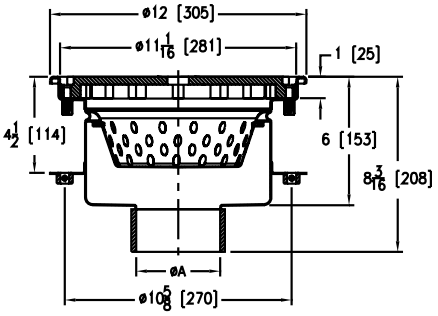

PREFIXES	DESCRIPTION	A PIPE SIZE	LIST PRICE
Z1800-12B*	Type 304 (CF8) Stainless Steel*	3″, 4″, 6″	POA
ZM1800-12B	Type 316 (CF8M) Stainless Steel	3″, 4″, 6″	POA
OUTLETS (SPECIFY PIPE SIZE IN INCHES AND TYPE OF OUTLET)			
OUTLET TYPE		PIPE SIZE/ OUTLET TYPE	ADD
BW	Butt-Weld (SCH-10)	3BW, 4BW, 6BW	N/C
NH	No-Hub	3NH, 4NH, 6NH	N/C
GRATE OPTIONS	DESCRIPTION		ADD
-GCX	Extra-Heavy-Duty Gas Tight Solid Cover		POA
-PCS	Special-Duty Perimeter Drainage Cover (9.7 Sq. In. Open Area)		POA
-PGM	Medium-Duty Perforated Grate (27.3 Sq. In. Open Area)		POA
			DEDUCT
-SGH	Heavy-Duty Slotted Grate (28.9 Sq. In. Open Area)		POA
-SGM	Medium-Duty Slotted Grate (28.9 Sq. In. Open Area)		POA
SUFFIXES	DESCRIPTION		ADD
–B	Bell Trap/Solid Sediment Bucket		POA
–KC	Anchor Flange with Seepage Holes and Clamp Collar		POA
–P	1/2″ Trap Primer Connection		POA
⏲ –SA	Stabilizer Assembly (3″ and 4″ Outlets Only) (See Z1036)		148.00
–TS	Top Secured Grate		POA
–VH	Vacuum Handle (-GCX Cover Only)		POA
–3PT	3″ Stainless Steel P-Trap		POA
–4PT	4″ Stainless Steel P-Trap		POA
–6PT	6″ Stainless Steel P-Trap		POA
BEST SELLERS			LIST PRICE
Z1800-12B-4NH			POA
Z1800-12B-6NH			POA

Z1800-12S 12″ X 12″ INDUSTRIAL FLOOR DRAIN 6″ SUMP DEPTH

ENGINEERING SPECIFICATION

Zurn Z1800-12S 12″ x 12″ x 6″ deep, 18 gauge, all Type 304 (CF8) stainless steel, square, industrial floor drain features loose set, anti-tilt, extra heavy-duty, perimeter drainage cover, reinforced top frame, perforated, removable sediment bucket with lift handle, pre-sloped bottom sump, and pre-pour stabilizing anchor tabs.

A Pipe Size inches [mm]	Approximate Weight lb [kg]	Grate Open Area sq in [cm²]
Butt-Weld (SCH 10) / No-Hub		
3 [76], 4 [102], 6 [152]	20 [9]	9.7 [63]

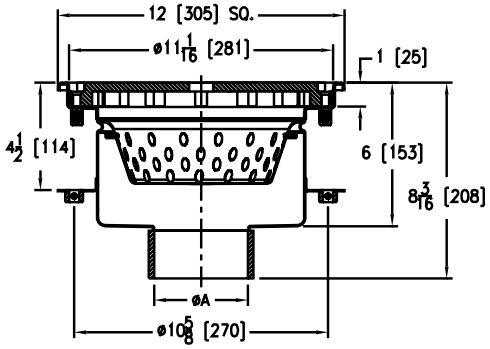

PREFIXES	DESCRIPTION	A PIPE SIZE	LIST PRICE
Z1800-12S*	Type 304 (CF8) Stainless Steel*	3″, 4″, 6″	POA
ZM1800-12S	Type 316 (CF8M) Stainless Steel	3″, 4″, 6″	POA
OUTLETS (SPECIFY PIPE SIZE IN INCHES AND TYPE OF OUTLET)			
OUTLET TYPE		PIPE SIZE/ OUTLET TYPE	ADD
BW	Butt-Weld (SCH-10)	3BW, 4BW, 6BW	N/C
NH	No-Hub	3NH, 4NH, 6NH	N/C
GRATE OPTIONS	DESCRIPTION		ADD
-GCX	Extra-Heavy-Duty Gas Tight Solid Cover		POA
-PCS	Special-Duty Perimeter Drainage Cover (9.7 Sq. In. Open Area)		POA
-PGM	Medium-Duty Perforated Grate (27.3 Sq. In. Open Area)		POA
			DEDUCT
-SGH	Heavy-Duty Slotted Grate (28.9 Sq. In. Open Area)		POA
-SGM	Medium-Duty Slotted Grate (28.9 Sq. In. Open Area)		POA
SUFFIXES	DESCRIPTION		ADD
–B	Bell Trap/Solid Sediment Bucket		POA
–KC	Anchor Flange with Seepage Holes and Clamp Collar		POA
–P	1/2″ Trap Primer Connection		POA
⏲ –SA	Stabilizer Assembly (3″ and 4″ Outlets Only) (See Z1036)		148.00
–TS	Top Secured Grate		POA
–VH	Vacuum Handle (-GCX Cover Only)		POA
–3PT	3″ Stainless Steel P-Trap		POA
–4PT	4″ Stainless Steel P-Trap		POA
–6PT	6″ Stainless Steel P-Trap		POA
BEST SELLERS			LIST PRICE
Z1800-12S-3NH			POA
Z1800-12S-4NH			POA
Z1800-12S-4NH-P			POA

**Regularly furnished unless otherwise specified.*

Items designated as Best Sellers are most specified and are generally in stock for shipment.

⏲ *This symbol denotes a product that is engineered to reduce installation and rework time.*

For additional product information, please visit www.zurn.com

Z1810-6B 6″ DIAMETER ADJUSTABLE INDUSTRIAL FLOOR DRAIN

ENGINEERING SPECIFICATION

Zurn Z1810-6B 6″ diameter, 18 gauge, all Type 304 (CF8) stainless steel, round, industrial floor drain features loose set, anti-tilt, medium-duty, perforated grate, adjustable reinforced top frame with O-ring seal and securing clamp, perforated, removable sediment bucket with lift handle, pre-sloped bottom sump, and pre-pour stabilizing anchor tabs.

A Pipe Size inches [mm]	Approximate Weight lb [kg]	Grate Open Area sq in [cm²]
Butt-Weld (SCH 10) / No-Hub		
2 [51], 3 [76], 4 [102]	6 [3]	5.8 [37]

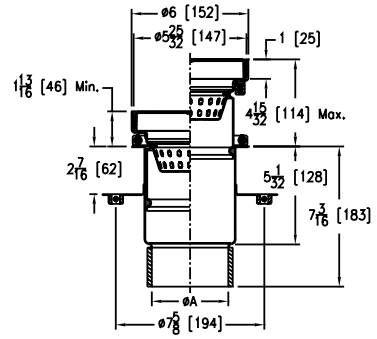

PREFIXES	DESCRIPTION	A PIPE SIZE	LIST PRICE
Z1810-6B*	Type 304 (CF8) Stainless Steel*	2″, 3″, 4″	POA
ZM1810-6B	Type 316 (CF8M) Stainless Steel	2″, 3″, 4″	POA
OUTLETS (SPECIFY PIPE SIZE IN INCHES AND TYPE OF OUTLET)			
OUTLET TYPE		PIPE SIZE/ OUTLET TYPE	ADD
BW	Butt-Weld (SCH-10)	2BW, 3BW, 4BW	N/C
NH	No-Hub	2NH, 3NH, 4NH	N/C
SUFFIXES	DESCRIPTION		ADD
–KC	Anchor Flange with Seepage Holes and Clamp Collar		POA
–P	1/2″ Trap Primer Connection		POA
◷ –SA	Stabilizer Assembly (See Z1035)		138.00
◷ –SQ	Stabilizer Q-Deck (See Z1035-Q)		184.00
–TS	Top Secured Grate		POA
–2PT	2″ Stainless Steel P-Trap		POA
–3PT	3″ Stainless Steel P-Trap		POA
–4PT	4″ Stainless Steel P-Trap		POA
BEST SELLER			LIST PRICE
Z1810-6B-3NH-KC-TS			POA

Z1810-8B 8″ DIAMETER ADJUSTABLE INDUSTRIAL FLOOR DRAIN

ENGINEERING SPECIFICATION

Zurn Z1810-8B 8″ diameter, 18 gauge, all Type 304 (CF8) stainless steel, round, industrial floor drain features loose set, anti-tilt, heavy-duty, perimeter drainage cover, adjustable reinforced top frame with O-ring seal and securing clamp, perforated, removable sediment bucket with lift handle, pre-sloped bottom sump, and pre-pour stabilizing anchor tabs.

A Pipe Size inches [mm]	Approximate Weight lb [kg]	Grate Open Area sq in [cm²]
Butt-Weld (SCH 10) / No-Hub		
2 [51], 3 [76], 4 [102]	8 [4]	6.1 [39]

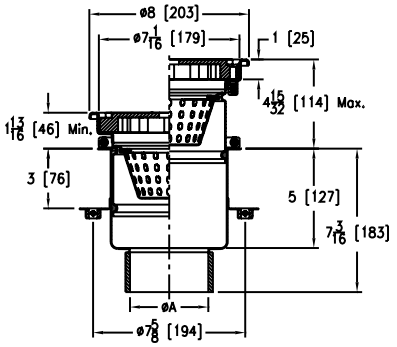

PREFIXES	DESCRIPTION	A PIPE SIZE	LIST PRICE
Z1810-8B*	Type 304 (CF8) Stainless Steel*	2″, 3″, 4″	POA
ZM1810-8B	Type 316 (CF8M) Stainless Steel	2″, 3″, 4″	POA
OUTLETS (SPECIFY PIPE SIZE IN INCHES AND TYPE OF OUTLET)			
OUTLET TYPE		PIPE SIZE/ OUTLET TYPE	ADD
BW	Butt-Weld (SCH-10)	2BW, 3BW, 4BW	N/C
NH	No-Hub	2NH, 3NH, 4NH	N/C
GRATE OPTIONS	DESCRIPTION		ADD
-GCH	Heavy-Duty Gas Tight Solid Cover		POA
-PCX	Extra-Heavy-Duty Perimeter Drainage Cover (6.1 Sq. In. Open Area)		POA
			DEDUCT
-PGM	Medium-Duty Perforated Grate (9.9 Sq. In. Open Area)		POA
-SGH	Heavy-Duty Slotted Grate (11.2 Sq. In. Open Area)		POA
-SGM	Medium-Duty Slotted Grate (11.2 Sq. In. Open Area)		POA
SUFFIXES	DESCRIPTION		ADD
–B	Bell Trap/Solid Sediment Bucket		POA
–KC	Anchor Flange with Seepage Holes and Clamp Collar		POA
–P	1/2″ Trap Primer Connection		POA
◷ –SA	Stabilizer Assembly (See Z1035)		138.00
◷ –SQ	Stabilizer Q-Deck (See Z1035-Q)		184.00
–TS	Top Secured Grate		POA
–VH	Vacuum Handle (-GCH Cover Only)		POA
–2PT	2″ Stainless Steel P-Trap		POA
–3PT	3″ Stainless Steel P-Trap		POA
–4PT	4″ Stainless Steel P-Trap		POA
BEST SELLER			LIST PRICE
Z1810-8B-4NH-GCH-P			POA

For additional product information, please visit www.zurn.com

**Regularly furnished unless otherwise specified.*

Items designated as Best Sellers are most specified and are generally in stock for shipment.

◷ This symbol denotes a product that is engineered to reduce installation and rework time.

Z1810-8S 8″ X 8″ ADJUSTABLE INDUSTRIAL FLOOR DRAIN

ENGINEERING SPECIFICATION

Zurn Z1810-8S 8″ x 8″, 18 gauge, all Type 304 (CF8) stainless steel, industrial floor drain features loose set, anti-tilt, heavy-duty, perimeter drainage cover, adjustable reinforced top frame with O-ring seal and securing clamp, perforated, removable sediment bucket with lift handle, pre-sloped bottom sump, and pre-pour stabilizing anchor tabs.

A Pipe Size inches [mm]	Approximate Weight lb [kg]	Grate Open Area sq in [cm²]
Butt-Weld (SCH 10) / No-Hub		
2 [51], 3 [76], 4 [102]	10 [5]	6.1 [39]

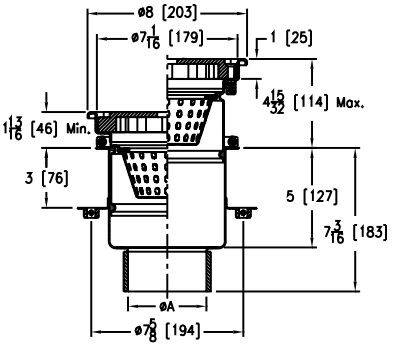

PREFIXES	DESCRIPTION	A PIPE SIZE	LIST PRICE
Z1810-8S*	Type 304 (CF8) Stainless Steel*	2″, 3″, 4″	POA
ZM1810-8S	Type 316 (CF8M) Stainless Steel	2″, 3″, 4″	POA
OUTLETS (SPECIFY PIPE SIZE IN INCHES AND TYPE OF OUTLET)			
OUTLET TYPE		PIPE SIZE/ OUTLET TYPE	ADD
BW	Butt-Weld (SCH-10)	2BW, 3BW, 4BW	N/C
NH	No-Hub	2NH, 3NH, 4NH	N/C
GRATE OPTIONS	DESCRIPTION		ADD
-GCH	Heavy-Duty Gas Tight Solid Cover		POA
-PCX	Extra-Heavy-Duty Perimeter Drainage Cover (6.1 Sq. In. Open Area)		POA
			DEDUCT
-PGM	Medium-Duty Perforated Grate (9.9 Sq. In. Open Area)		POA
-SGH	Heavy-Duty Slotted Grate (11.2 Sq. In. Open Area)		POA
-SGM	Medium-Duty Slotted Grate (11.2 Sq. In. Open Area)		POA
SUFFIXES	DESCRIPTION		ADD
–B	Bell Trap/Solid Sediment Bucket		POA
–KC	Anchor Flange with Seepage Holes and Clamp Collar		POA
–P	1/2″ Trap Primer Connection		POA
⏲ –SA	Stabilizer Assembly (See Z1035)		138.00
⏲ –SQ	Stabilizer Q-Deck (See Z1035-Q)		184.00
–TS	Top Secured Grate		POA
–VH	Vacuum Handle (-GCH Cover Only)		POA
–2PT	2″ Stainless Steel P-Trap		POA
–3PT	3″ Stainless Steel P-Trap		POA
–4PT	4″ Stainless Steel P-Trap		POA

Z1810-12B 12″ DIAMETER ADJUSTABLE INDUSTRIAL FLOOR DRAIN

ENGINEERING SPECIFICATION

Zurn Z1810-12B 12″ diameter, 18 gauge, all Type 304 (CF8) stainless steel, round, industrial floor drain features loose set, anti-tilt, extra heavy-duty, perimeter drainage cover, adjustable reinforced top frame with O-ring seal and securing clamp, perforated, removable sediment bucket with lift handle, pre-sloped bottom sump, and pre-pour stabilizing anchor tabs.

A Pipe Size inches [mm]	Approximate Weight lb [kg]	Grate Open Area sq in [cm²]
Butt-Weld (SCH 10) / No-Hub		
3 [76], 4 [102], 6 [152]	18 [8]	9.7 [63]

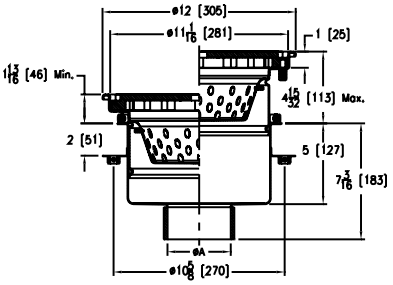

PREFIXES	DESCRIPTION	A PIPE SIZE	LIST PRICE
Z1810-12B*	Type 304 (CF8) Stainless Steel*	3″, 4″, 6″	POA
ZM1810-12B	Type 316 (CF8M) Stainless Steel	3″, 4″, 6″	POA
OUTLETS (SPECIFY PIPE SIZE IN INCHES AND TYPE OF OUTLET)			
OUTLET TYPE		PIPE SIZE/ OUTLET TYPE	ADD
BW	Butt-Weld (SCH-10)	3BW, 4BW, 6BW	N/C
NH	No-Hub	3NH, 4NH, 6NH	N/C
GRATE OPTIONS	DESCRIPTION		ADD
-GCX	Heavy-Duty Gas Tight Solid Cover		POA
-PCS	Extra-Heavy-Duty Perimeter Drainage Cover (6.1 Sq. In. Open Area)		POA
			DEDUCT
-PGM	Medium-Duty Perforated Grate (27.3 Sq. In. Open Area)		POA
-SGH	Heavy-Duty Slotted Grate (28.9 Sq. In. Open Area)		POA
-SGM	Medium-Duty Slotted Grate (28.9 Sq. In. Open Area)		POA
SUFFIXES	DESCRIPTION		ADD
–B	Bell Trap/Solid Sediment Bucket		POA
–KC	Anchor Flange with Seepage Holes and Clamp Collar		POA
–P	1/2″ Trap Primer Connection		POA
⏲ –SA	Stabilizer Assembly (See Z1036)		138.00
–TS	Top Secured Grate		POA
–VH	Vacuum Handle (-GCX Cover Only)		POA
–3PT	3″ Stainless Steel P-Trap		POA
–4PT	4″ Stainless Steel P-Trap		POA
–6PT	6″ Stainless Steel P-Trap		POA

**Regularly furnished unless otherwise specified.*

Items designated as Best Sellers are most specified and are generally in stock for shipment.

⏲ *This symbol denotes a product that is engineered to reduce installation and rework time.*

For additional product information, please visit www.zurn.com

Z1810-12S 12″ X 12″ ADJUSTABLE INDUSTRIAL FLOOR DRAIN

ENGINEERING SPECIFICATION

Zurn Z1810-12S 12″ x 12″, 18 gauge, all Type 304 (CF8) stainless steel, industrial floor drain features loose set, anti-tilt, extra heavy-duty, perimeter drainage cover, adjustable reinforced top frame with O-ring seal and securing clamp, perforated, removable sediment bucket with lift handle, pre-sloped bottom sump, and pre-pour stabilizing anchor tabs.

A Pipe Size inches [mm]	Approximate Weight lb [kg]	Grate Open Area sq in [cm²]
Butt-Weld (SCH 10) / No-Hub		
3 [76], 4 [102], 6 [152]	21 [10]	9.7 [63]

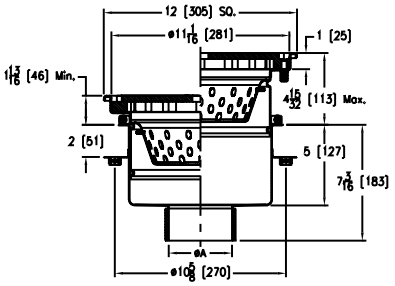

PREFIXES	DESCRIPTION	A PIPE SIZE	LIST PRICE
Z1810-12S*	Type 304 (CF8) Stainless Steel*	3″, 4″, 6″	POA
ZM1810-12S	Type 316 (CF8M) Stainless Steel	3″, 4″, 6″	POA
OUTLETS (SPECIFY PIPE SIZE IN INCHES AND TYPE OF OUTLET)			
OUTLET TYPE		PIPE SIZE/OUTLET TYPE	ADD
BW	Butt-Weld (SCH-10)	3BW, 4BW, 6BW	N/C
NH	No-Hub	3NH, 4NH, 6NH	N/C
GRATE OPTIONS	DESCRIPTION		ADD
-GCX	Extra-Heavy-Duty Gas Tight Solid Cover		POA
-PCS	Special-Duty Perimeter Drainage Cover (9.7 Sq. In. Open Area)		POA
-PGM	Medium-Duty Perforated Grate (27.3 Sq. In. Open Area)		POA
			DEDUCT
-SGH	Heavy-Duty Slotted Grate (28.9 Sq. In. Open Area)		POA
-SGM	Medium-Duty Slotted Grate (28.9 Sq. In. Open Area)		POA
SUFFIXES	DESCRIPTION		ADD
–B	Bell Trap/Solid Sediment Bucket		POA
–KC	Anchor Flange with Seepage Holes and Clamp Collar		POA
–P	1/2″ Trap Primer Connection		POA
⏲ –SA	Stabilizer Assembly (See Z1036)		148.00
–TS	Top Secured Grate		POA
–VH	Vacuum Handle (-GCX Cover Only)		POA
–3PT	3″ Stainless Steel P-Trap		POA
–4PT	4″ Stainless Steel P-Trap		POA
–6PT	6″ Stainless Steel P-Trap		POA
BEST SELLER			LIST PRICE
Z1810-12S-3NH-KC			POA

Z1820-8B 8″ DIAMETER INDUSTRIAL FLOOR DRAIN WITH SIDE OUTLET

ENGINEERING SPECIFICATION

Zurn Z1820-8B 8″ diameter, 18 gauge, all Type 304 (CF8) stainless steel, round, industrial floor drain features 1.25° pre-sloped side outlet, loose set, anti-tilt, heavy-duty, perimeter drainage cover, reinforced top frame, perforated, removable sediment bucket with lift handle, and pre-pour stabilizing anchor tabs.

Dimensions in inches [mm]			Approximate Weight lb [kg]	Grate Open Area sq in [cm²]
A Pipe Size	E Body Height Dimensions	F		
Butt-Weld (SCH 10) / No-Hub				
2 [51], 3 [76]	6 [152]	3-1/2 [89]	7 [3]	6.1 [39]
4 [102]	6-1/2 [165]	3 [76]		

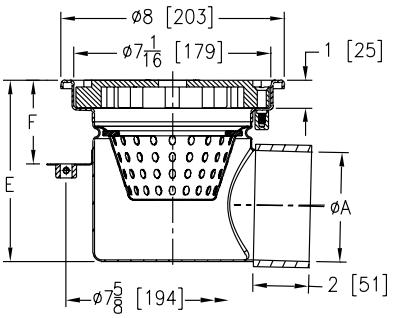

PREFIXES	DESCRIPTION	A PIPE SIZE	LIST PRICE
Z1820-8B*	Type 304 (CF8) Stainless Steel*	2″, 3″, 4″	POA
ZM1820-8B	Type 316 (CF8M) Stainless Steel	2″, 3″, 4″	POA
OUTLETS (SPECIFY PIPE SIZE IN INCHES AND TYPE OF OUTLET)			
OUTLET TYPE		PIPE SIZE/OUTLET TYPE	'E' BODY HT. DIM.	ADD
BW	Butt-Weld (SCH-10)	2BW, 3BW	6″	N/C
		4BW	6-1/2″	N/C
NH	No-Hub	2NH, 3NH	6″	N/C
		4NH	6-1/2″	N/C
GRATE OPTIONS	DESCRIPTION			ADD
-GCH	Heavy-Duty Gas Tight Solid Cover			POA
-PCX	Extra-Heavy-Duty Perimeter Drainage Cover (6.1 Sq. In. Open Area)			POA
				DEDUCT
-PGM	Medium-Duty Perforated Grate (9.9 Sq. In. Open Area)			POA
-SGH	Heavy-Duty Slotted Grate (11.2 Sq. In. Open Area)			POA
-SGM	Medium-Duty Slotted Grate (11.2 Sq. In. Open Area)			POA
SUFFIXES	DESCRIPTION			ADD
–B	Bell Trap/Solid Sediment Bucket			POA
–P	1/2″ Trap Primer Connection			POA
⏲ –SA	Stabilizer Assembly (See Z1035)			138.00
⏲ –SQ	Stabilizer Q-Deck (See Z1035-Q)			184.00
–TS	Top Secured Grate			POA
–VH	Vacuum Handle (-GCH Cover Only)			POA

For additional product information, please visit www.zurn.com

**Regularly furnished unless otherwise specified.*

Items designated as Best Sellers are most specified and are generally in stock for shipment.

⏲ This symbol denotes a product that is engineered to reduce installation and rework time.

Z1820-8S 8″ X 8″ INDUSTRIAL FLOOR DRAIN WITH SIDE OUTLET

ENGINEERING SPECIFICATION

Zurn Z1820-8S 8″ x 8″, 18 gauge, all Type 304 (CF8) stainless steel, industrial floor drain features 1.25° pre-sloped side outlet, loose set, anti-tilt, heavy-duty, perimeter drainage cover, reinforced top frame, perforated, removable sediment bucket with lift handle, and pre-pour stabilizing anchor tabs.

Dimensions in inches [mm]			Approximate Weight lb [kg]
A Pipe Size	E Body Height Dimensions	F	
Butt-Weld (SCH 10) / No-Hub			
2 [51], 3 [76]	6 [152]	3-1/2 [89]	10 [5]
4 [102]	6-1/2 [165]	3 [76]	

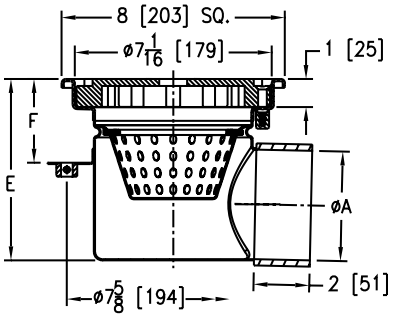

PREFIXES	DESCRIPTION	A PIPE SIZE	LIST PRICE
Z1820-8S*	Type 304 (CF8) Stainless Steel*	2″, 3″, 4″	POA
ZM1820-8S	Type 316 (CF8M) Stainless Steel	2″, 3″, 4″	POA
OUTLETS (SPECIFY PIPE SIZE IN INCHES AND TYPE OF OUTLET)			
OUTLET TYPE		PIPE SIZE/ OUTLET TYPE	'E' BODY HT. DIM. / ADD
BW	Butt-Weld (SCH-10)	2BW, 3BW	6″ / N/C
		4BW	6-1/2″ / N/C
NH	No-Hub	2NH, 3NH	6″ / N/C
		4NH	6-1/2″ / N/C
GRATE OPTIONS	DESCRIPTION		ADD
-GCH	Heavy-Duty Gas Tight Solid Cover		POA
-PCX	Extra-Heavy-Duty Perimeter Drainage Cover (6.1 Sq. In. Open Area)		POA
			DEDUCT
-PGM	Medium-Duty Perforated Grate (9.9 Sq. In. Open Area)		POA
-SGH	Heavy-Duty Slotted Grate (11.2 Sq. In. Open Area)		POA
-SGM	Medium-Duty Slotted Grate (11.2 Sq. In. Open Area)		POA
SUFFIXES	DESCRIPTION		ADD
–B	Bell Trap/Solid Sediment Bucket		POA
–P	1/2″ Trap Primer Connection		POA
◷ –SA	Stabilizer Assembly (See Z1035)		138.00
◷ –SQ	Stabilizer Q-Deck (See Z1035-Q)		184.00
–TS	Top Secured Grate		POA
–VH	Vacuum Handle (-GCH Cover Only)		POA

Z1820-12B 12″ DIAMETER INDUSTRIAL FLOOR DRAIN WITH SIDE OUTLET

ENGINEERING SPECIFICATION

Zurn Z1820-12B 12″ diameter, 18 gauge, all Type 304 (CF8) stainless steel, round, industrial floor drain features 1.25° pre-sloped side outlet, loose set, anti-tilt, extra heavy-duty, perimeter drainage cover, reinforced top frame, perforated, removable sediment bucket with lift handle, and pre-pour stabilizing anchor tabs.

Dimensions in inches [mm]			Approximate Weight lb [kg]	Grate Open Area sq in [cm²]
A Pipe Size	E Body Height Dimensions	F		
Butt-Weld (SCH 10) / No-Hub				
3 [76]	6 [152]	4 [102]	17 [8]	9.7 [63]
4 [102]	6-1/2 [165]			
6 [152]	8-1/2 [216]	7-1/2 [191]		

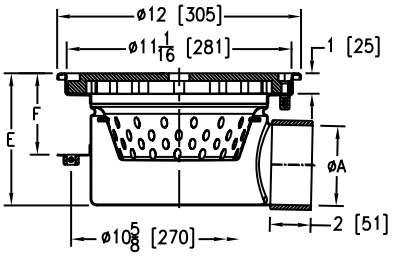

PREFIXES	DESCRIPTION	A PIPE SIZE	LIST PRICE
Z1820-12B*	Type 304 (CF8) Stainless Steel*	3″, 4″, 6″	POA
ZM1820-12B	Type 316 (CF8M) Stainless Steel	3″, 4″, 6″	POA
OUTLETS (SPECIFY PIPE SIZE IN INCHES AND TYPE OF OUTLET)			
OUTLET TYPE		PIPE SIZE/ OUTLET TYPE	ADD
BW	Butt-Weld (SCH-10)	3BW	6″ / N/C
		4BW	6-1/2″ / N/C
		6BW	8-1/2″ / N/C
NH	No-Hub	3NH	6″ / N/C
		4NH	6-1/2″ / N/C
		6NH	8-1/2″ / N/C
GRATE OPTIONS	DESCRIPTION		ADD
-GCX	Extra-Heavy-Duty Gas Tight Solid Cover		POA
-PCS	Special-Duty Perimeter Drainage Cover (9.7 Sq. In. Open Area)		POA
-PGM	Medium-Duty Perforated Grate (27.3 Sq. In. Open Area)		N/C
			DEDUCT
-SGH	Heavy-Duty Slotted Grate (28.9 Sq. In. Open Area)		POA
-SGM	Medium-Duty Slotted Grate (28.9 Sq. In. Open Area)		POA
SUFFIXES	DESCRIPTION		ADD
–B	Bell Trap/Solid Sediment Bucket		POA
–P	1/2″ Trap Primer Connection		POA
◷ –SA	Stabilizer Assembly (See Z1036)		148.00
–TS	Top Secured Grate		POA
–VH	Vacuum Handle (-GCX Cover Only)		POA

**Regularly furnished unless otherwise specified.*

Items designated as Best Sellers are most specified and are generally in stock for shipment.

◷ This symbol denotes a product that is engineered to reduce installation and rework time.

For additional product information, please visit www.zurn.com

Z1820-12S 12″ X 12″ INDUSTRIAL FLOOR DRAIN WITH SIDE OUTLET

ENGINEERING SPECIFICATION

Zurn Z1820-12S 12″ x 12″, 18 gauge, all Type 304 (CF8) stainless steel, industrial floor drain features 1.25° pre-sloped side outlet, loose set, anti-tilt, extra heavy-duty, perimeter drainage cover, reinforced top frame, perforated, removable sediment bucket with lift handle, and pre-pour stabilizing anchor tabs.

A Pipe Size	E Body Height Dimensions	F	Approximate Weight lb [kg]	Grate Open Area sq in [cm²]
Butt-Weld (SCH 10) / No-Hub				
3 [76]	6 [152]	4 [102]	20 [9]	9.7 [63]
4 [102]	6-1/2 [165]			
6 [152]	8-1/2 [216]	7-1/2 [191]		

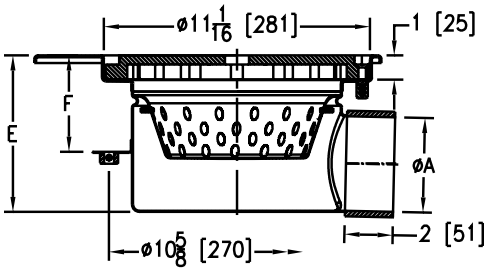

PREFIXES	DESCRIPTION		A PIPE SIZE	LIST PRICE
Z1820-12S*	Type 304 (CF8) Stainless Steel*		3″, 4″, 6″	POA
ZM1820-12S	Type 316 (CF8M) Stainless Steel		3″, 4″, 6″	POA
OUTLETS (SPECIFY PIPE SIZE IN INCHES AND TYPE OF OUTLET)				
OUTLET TYPE		PIPE SIZE/ OUTLET TYPE		ADD
BW	Butt-Weld (SCH-10)	3BW	6″	N/C
		4BW	6-1/2″	N/C
		6BW	8-1/2″	N/C
NH	No-Hub	3NH	6″	N/C
		4NH	6-1/2″	N/C
		6NH	8-1/2″	N/C
GRATE OPTIONS	DESCRIPTION			ADD
-GCX	Extra-Heavy-Duty Gas Tight Solid Cover			POA
-PCS	Special-Duty Perimeter Drainage Cover (9.7 Sq. In. Open Area)			POA
-PGM	Medium-Duty Perforated Grate (27.3 Sq. In. Open Area)			POA
				DEDUCT
-SGH	Heavy-Duty Slotted Grate (28.9 Sq. In. Open Area)			POA
-SGM	Medium-Duty Slotted Grate (28.9 Sq. In. Open Area)			POA
SUFFIXES	DESCRIPTION			ADD
–B	Bell Trap/Solid Sediment Bucket			POA
–P	1/2″ Trap Primer Connection			POA
◷ –SA	Stabilizer Assembly (See Z1036)			148.00
–TS	Top Secured Grate			POA
–VH	Vacuum Handle (-GCX Cover Only)			POA

Z1830-8B 8″ DIAMETER INDUSTRIAL FLOOR DRAIN 8″ SUMP DEPTH

ENGINEERING SPECIFICATION

Zurn Z1830-8B 8″ diameter x 8″ deep, 18 gauge, all Type 304 (CF8) stainless steel, round, industrial floor drain features loose set, anti-tilt, heavy-duty, perimeter drainage cover, reinforced top frame, perforated, removable sediment bucket with lift handle, pre-sloped bottom sump, and pre-pour stabilizing anchor tabs.

A Pipe Size	Approximate Weight lb [kg]	Grate Open Area sq in [cm²]
Butt-Weld (SCH 10) / No-Hub		
2 [51], 3 [76], 4 [102]	8 [4]	6.1 [39]

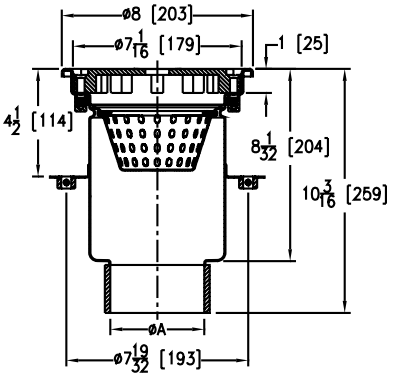

PREFIXES	DESCRIPTION		A PIPE SIZE	LIST PRICE
Z1830-8B*	Type 304 (CF8) Stainless Steel*		2″, 3″, 4″	POA
ZM1830-8B	Type 316 (CF8M) Stainless Steel		2″, 3″, 4″	POA
OUTLETS (SPECIFY PIPE SIZE IN INCHES AND TYPE OF OUTLET)				
OUTLET TYPE		PIPE SIZE/ OUTLET TYPE		ADD
BW	Butt-Weld (SCH-10)	2BW, 3BW, 4BW		N/C
NH	No-Hub	2NH, 3NH, 4NH		N/C
GRATE OPTIONS	DESCRIPTION			ADD
-GCH	Heavy-Duty Gas Tight Solid Cover			POA
-PCX	Extra-Heavy-Duty Perimeter Drainage Cover (6.1 Sq. In. Open Area)			POA
				DEDUCT
-PGM	Medium-Duty Perforated Grate (9.9 Sq. In. Open Area)			POA
-SGH	Heavy-Duty Slotted Grate (11.2 Sq. In. Open Area)			POA
-SGM	Medium-Duty Slotted Grate (11.2 Sq. In. Open Area)			POA
SUFFIXES	DESCRIPTION			ADD
–B	Bell Trap/Solid Sediment Bucket			POA
–KC	Anchor Flange with Seepage Holes and Clamp Collar			POA
–P	1/2″ Trap Primer Connection			POA
◷ –SA	Stabilizer Assembly (See Z1036)			138.00
◷ –SQ	Stabilizer Q-Deck (See Z1035-Q)			184.00
–TS	Top Secured Grate			POA
–VH	Vacuum Handle (-GCH Cover Only)			POA
–2PT	2″ Stainless Steel P-Trap			POA
–3PT	3″ Stainless Steel P-Trap			POA
–4PT	4″ Stainless Steel P-Trap			POA

For additional product information, please visit www.zurn.com

**Regularly furnished unless otherwise specified.*

Items designated as Best Sellers are most specified and are generally in stock for shipment.

◷ This symbol denotes a product that is engineered to reduce installation and rework time.

Z1830-8S 8″ X 8″ DIAMETER INDUSTRIAL FLOOR DRAIN 8″ SUMP DEPTH

ENGINEERING SPECIFICATION

Zurn Z1830-8S 8″ x 8″ x 8″ deep, 18 gauge, all Type 304 (CF8) stainless steel, square, industrial floor drain features loose set, anti-tilt, heavy-duty, perimeter drainage cover, reinforced top frame, perforated, removable sediment bucket with lift handle, pre-sloped bottom sump, and pre-pour stabilizing anchor tabs.

A Pipe Size inches [mm]	Approximate Weight lb [kg]	Grate Open Area sq in [cm²]
Butt-Weld (SCH 10) / No-Hub		
2 [51], 3 [76], 4 [102]	11 [5]	6.1 [39]

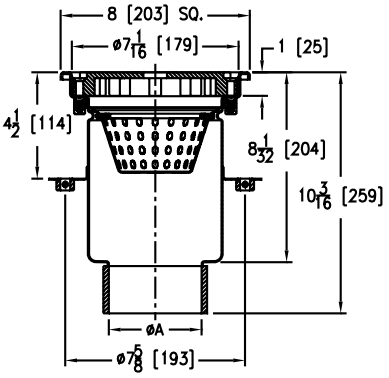

PREFIXES	DESCRIPTION	A PIPE SIZE	LIST PRICE
Z1830-8S*	Type 304 (CF8) Stainless Steel*	2″, 3″, 4″	POA
ZM1830-8S	Type 316 (CF8M) Stainless Steel	2″, 3″, 4″	POA
OUTLETS (SPECIFY PIPE SIZE IN INCHES AND TYPE OF OUTLET)			
OUTLET TYPE		PIPE SIZE/OUTLET TYPE	ADD
BW	Butt-Weld (SCH-10)	2BW, 3BW, 4BW	N/C
NH	No-Hub	2NH, 3NH, 4NH	N/C
GRATE OPTIONS	DESCRIPTION		ADD
-GCH	Heavy-Duty Gas Tight Solid Cover		POA
-PCX	Extra-Heavy-Duty Perimeter Drainage Cover (6.1 Sq. In. Open Area)		POA
			DEDUCT
-PGM	Medium-Duty Perforated Grate (9.9 Sq. In. Open Area)		POA
-SGH	Heavy-Duty Slotted Grate (11.2 Sq. In. Open Area)		POA
-SGM	Medium-Duty Slotted Grate (11.2 Sq. In. Open Area)		POA
SUFFIXES	DESCRIPTION		ADD
–B	Bell Trap/Solid Sediment Bucket		POA
–KC	Anchor Flange with Seepage Holes and Clamp Collar		POA
–P	1/2″ Trap Primer Connection		POA
⏲ –SA	Stabilizer Assembly (See Z1035)		138.00
⏲ –SQ	Stabilizer Q-Deck (See Z1035-Q)		184.00
–TS	Top Secured Grate		POA
–VH	Vacuum Handle (-GCH Cover Only)		POA
–2PT	2″ Stainless Steel P-Trap		POA
–3PT	3″ Stainless Steel P-Trap		POA
–4PT	4″ Stainless Steel P-Trap		POA

Z1830-12B 12″ DIAMETER INDUSTRIAL FLOOR DRAIN 8″ SUMP DEPTH

ENGINEERING SPECIFICATION

Zurn Z1830-12B 12″ diameter x 8″ deep, 18 gauge, all Type 304 (CF8) stainless steel, round, industrial floor drain features loose set, anti-tilt, extra heavy-duty, perimeter drainage cover, reinforced top frame, perforated, removable sediment bucket with lift handle, presloped bottom sump, and pre-pour stabilizing anchor tabs.

A Pipe Size inches [mm]	Approximate Weight lb [kg]	Grate Open Area sq in [cm²]
Butt-Weld (SCH 10) / No-Hub		
3 [76], 4 [102], 6 [152]	18 [8]	9.7 [63]

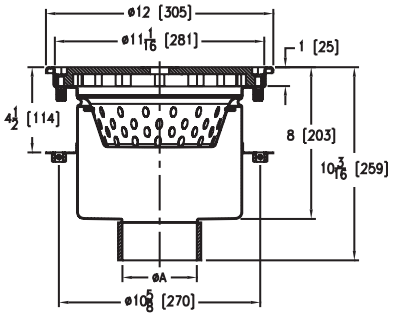

PREFIXES	DESCRIPTION	A PIPE SIZE	LIST PRICE
Z1830-12B*	Type 304 (CF8) Stainless Steel*	3″, 4″, 6″	POA
ZM1830-12B	Type 316 (CF8M) Stainless Steel	3″, 4″, 6″	POA
OUTLETS (SPECIFY PIPE SIZE IN INCHES AND TYPE OF OUTLET)			
OUTLET TYPE		PIPE SIZE/OUTLET TYPE	ADD
BW	Butt-Weld (SCH-10)	3BW, 4BW, 6BW	N/C
NH	No-Hub	3NH, 4NH, 6NH	N/C
GRATE OPTIONS	DESCRIPTION		ADD
-GCX	Extra-Heavy-Duty Gas Tight Solid Cover		POA
-PCS	Special-Duty Perimeter Drainage Cover (9.7 Sq. In. Open Area)		POA
-PGM	Medium-Duty Perforated Grate (27.3 Sq. In. Open Area)		POA
			DEDUCT
-SGH	Heavy-Duty Slotted Grate (28.9 Sq. In. Open Area)		POA
-SGM	Medium-Duty Slotted Grate (28.9 Sq. In. Open Area)		POA
SUFFIXES	DESCRIPTION		ADD
–B	Bell Trap/Solid Sediment Bucket		POA
–KC	Anchor Flange with Seepage Holes and Clamp Collar		POA
–P	1/2″ Trap Primer Connection		POA
⏲ –SA	Stabilizer Assembly (See Z1036) 3″ and 4″ Outlets Only		148.00
–TS	Top Secured Grate		POA
–VH	Vacuum Handle (-GCX Cover Only)		POA
–3PT	3″ Stainless Steel P-Trap		POA
–4PT	4″ Stainless Steel P-Trap		POA
–6PT	6″ Stainless Steel P-Trap		POA
BEST SELLER			LIST PRICE
Z1830-12B-4NH-KC-SGH			POA

**Regularly furnished unless otherwise specified.*

Items designated as Best Sellers are most specified and are generally in stock for shipment.

⏲ This symbol denotes a product that is engineered to reduce installation and rework time.

For additional product information, please visit www.zurn.com

Z1830-12S 12" X 12" INDUSTRIAL FLOOR DRAIN 8" SUMP DEPTH

ENGINEERING SPECIFICATION

Zurn Z1830-12S 12" x 12" x 8" deep, 18 gauge, all Type 304 (CF8) stainless steel, square, industrial floor drain features loose set, anti-tilt, extra heavy-duty, perimeter drainage cover, reinforced top frame, perforated, removable sediment bucket with lift handle, presloped bottom sump, and pre-pour stabilizing anchor tabs.

A Pipe Size inches [mm]	Approximate Weight lb [kg]	Grate Open Area sq in [cm²]
Butt-Weld (SCH 10) / No-Hub		
3 [76], 4 [102], 6 [152]	21 [10]	9.7 [63]

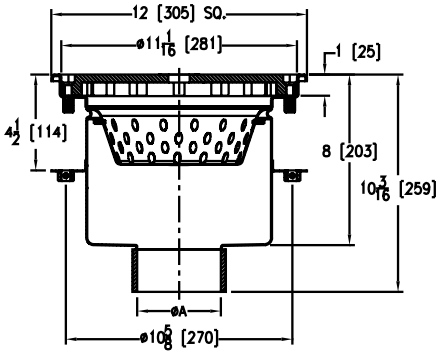

PREFIXES	DESCRIPTION	A PIPE SIZE	LIST PRICE
Z1830-12S*	Type 304 (CF8) Stainless Steel*	3", 4", 6"	POA
ZM1830-12S	Type 316 (CF8M) Stainless Steel	3", 4", 6"	POA
OUTLETS (SPECIFY PIPE SIZE IN INCHES AND TYPE OF OUTLET)			
OUTLET TYPE		PIPE SIZE/ OUTLET TYPE	ADD
BW	Butt-Weld (SCH-10)	3BW, 4BW, 6BW	N/C
NH	No-Hub	3NH, 4NH, 6NH	N/C
GRATE OPTIONS	DESCRIPTION		ADD
-GCX	Extra-Heavy-Duty Gas Tight Solid Cover		POA
-PCS	Special-Duty Perimeter Drainage Cover (9.7 Sq. In. Open Area)		POA
-PGM	Medium-Duty Perforated Grate (27.3 Sq. In. Open Area)		POA
			DEDUCT
-SGH	Heavy-Duty Slotted Grate (28.9 Sq. In. Open Area)		POA
-SGM	Medium-Duty Slotted Grate (28.9 Sq. In. Open Area)		POA
SUFFIXES	DESCRIPTION		ADD
–B	Bell Trap/Solid Sediment Bucket		POA
–KC	Anchor Flange with Seepage Holes and Clamp Collar		POA
–P	1/2" Trap Primer Connection		POA
Ⓛ –SA	Stabilizer Assembly (See Z1036) 3" and 4" Outlets Only		148.00
–TS	Top Secured Grate		POA
–VH	Vacuum Handle (-GCX Cover Only)		POA
–3PT	3" Stainless Steel P-Trap		POA
–4PT	4" Stainless Steel P-Trap		POA
–6PT	6" Stainless Steel P-Trap		POA

Z1840-6B 6" DIAMETER INDUSTRIAL FLOOR CLEANOUT

ENGINEERING SPECIFICATION

Zurn Z1840-6B 6" diameter, 18 gauge, all Type 304 (CF8) stainless steel, round, industrial floor cleanout features secured, extra heavy-duty cover, removable ABS cleanout plug, and pre-pour stabilizing anchor tabs.

Dimensions in inches [mm]				Approximate Weight lb [kg]
A Pipe Size	B N.P.T.	E Body Height Dimensions	Top Size	
Butt-Weld (SCH 10) / No-Hub				
3 [76]	2-1/2 [64]	4-1/32 [102]	6 [152]	5 [2]
4 [102]	3-1/2 [89]	4-21/32 [118]	6 [152]	

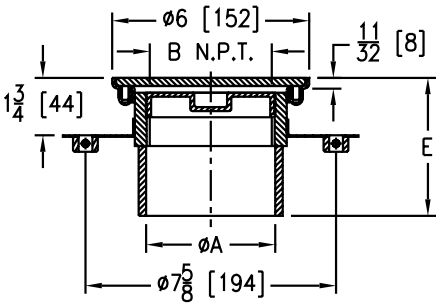

PREFIXES	DESCRIPTION	A PIPE SIZE	LIST PRICE
Z1840-6B*	Type 304 (CF8) Stainless Steel*	3", 4"	POA
ZM1840-6B	Type 316 (CF8M) Stainless Steel	3", 4"	POA
OUTLETS (SPECIFY PIPE SIZE IN INCHES AND TYPE OF OUTLET)			
OUTLET TYPE		PIPE SIZE/ OUTLET TYPE	'E' BODY HT. DIM.	ADD
BW	Butt-Weld (SCH-10)	3BW	4-1/32"	N/C
		4BW	4-21/32"	N/C
NH	No-Hub	3NH	4-1/32"	N/C
		4NH	4-21/32"	N/C
SUFFIXES	DESCRIPTION		ADD
Ⓛ –SA	Stabilizer Assembly (See Z1035)		-
Ⓛ –SQ	Stabilizer Q-Deck (See Z1035-Q)		-
BEST SELLER			LIST PRICE
Z1840-6B-4NH			POA

For additional product information, please visit www.zurn.com

**Regularly furnished unless otherwise specified.*

Items designated as Best Sellers are most specified and are generally in stock for shipment.

Ⓛ This symbol denotes a product that is engineered to reduce installation and rework time.

Z1840-6S 6″ X 6″ INDUSTRIAL FLOOR CLEANOUT

ENGINEERING SPECIFICATION

Zurn Z1840-6S 6″ x 6″ square, 18 gauge, all Type 304 (CF8) stainless steel industrial floor cleanout features secured, extra heavy-duty cover, removable ABS cleanout plug, and pre-pour stabilizing anchor tabs.

Dimensions in inches [mm]				Approximate Weight lb [kg]
A Pipe Size	B N.P.T.	E Body Height Dimensions	Top Size	
Butt-Weld (SCH 10) / No-Hub				
3 [76]	2-1/2 [64]	4-1/32 [102]	6 [152]	6 [3]
4 [102]	3-1/2 [89]	4-21/32 [118]	6 [152]	

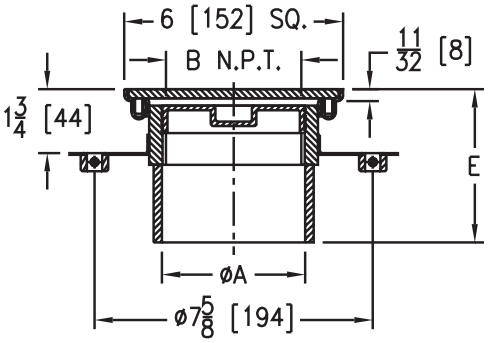

PREFIXES	DESCRIPTION		A PIPE SIZE	LIST PRICE
Z1840-6S*	Type 304 (CF8) Stainless Steel*		3″, 4″	POA
ZM1840-6S	Type 316 (CF8M) Stainless Steel		3″, 4″	POA
OUTLETS (SPECIFY PIPE SIZE IN INCHES AND TYPE OF OUTLET)				
OUTLET TYPE		PIPE SIZE/ OUTLET TYPE	'E' BODY HT. DIM.	ADD
BW	Butt-Weld (SCH-10)	3BW	4-1/32″	N/C
		4BW	4-21/32″	N/C
NH	No-Hub	3NH	4-1/32″	N/C
		4NH	4-21/32″	N/C
SUFFIXES	DESCRIPTION			ADD
–SA	Stabilizer Assembly (See Z1035)			-
–SQ	Stabilizer Q-Deck (See Z1035-Q)			-
SEE LEGACY ADDENDUM ON PAGE 369 FOR MORE INFORMATION				

Z1840-8B 8″ DIAMETER INDUSTRIAL FLOOR CLEANOUT

ENGINEERING SPECIFICATION

Zurn Z1840-8B 8″ diameter, 18 gauge, all Type 304 (CF8) stainless steel industrial floor cleanout features secured, extra heavy-duty cover, removable ABS cleanout plug, and pre-pour stabilizing anchor tabs.

Dimensions in inches [mm]			Approximate Weight lb [kg]
A Pipe Size	B N.P.T.	Top Size	
Butt-Weld (SCH 10) / No-Hub			
6 [152]	5 [127]	8 [203]	6 [3]

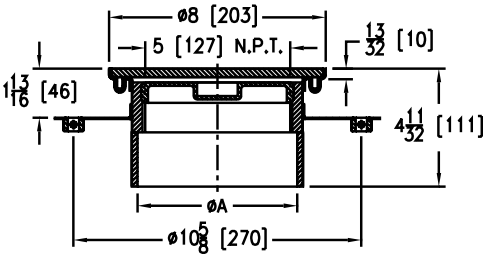

PREFIXES	DESCRIPTION		A PIPE SIZE	LIST PRICE
Z1840-8B*	Type 304 (CF8) Stainless Steel*		6″	POA
ZM1840-8B	Type 316 (CF8M) Stainless Steel		6″	POA
OUTLETS (SPECIFY PIPE SIZE IN INCHES AND TYPE OF OUTLET)				
OUTLET TYPE		PIPE SIZE/ OUTLET TYPE		ADD
BW	Butt-Weld (SCH-10)	6BW		N/C
NH	No-Hub	6NH		N/C
BEST SELLER				LIST PRICE
Z1840-8B-6NH				POA

*Regularly furnished unless otherwise specified.

Items designated as Best Sellers are most specified and are generally in stock for shipment.

This symbol denotes a product that is engineered to reduce installation and rework time.

Z1840-8S 8″ X 8″ INDUSTRIAL FLOOR CLEANOUT

ENGINEERING SPECIFICATION

Zurn Z1840-8S 8″ x 8″ square, 18 gauge, all Type 304 (CF8) stainless steel industrial floor cleanout features secured, extra heavy-duty cover, removable ABS cleanout plug, and pre-pour stabilizing anchor tabs.

PREFIXES	DESCRIPTION	A PIPE SIZE	LIST PRICE
Z1840-8S*	Type 304 (CF8) Stainless Steel*	6″	POA
ZM1840-8S	Type 316 (CF8M) Stainless Steel	6″	POA
OUTLETS (SPECIFY PIPE SIZE IN INCHES AND TYPE OF OUTLET)			
OUTLET TYPE		PIPE SIZE/ OUTLET TYPE	ADD
BW	Butt-Weld (SCH-10)	6BW	N/C
NH	No-Hub	6NH	N/C

Dimensions in inches [mm]			Approximate Weight lb [kg]
A Pipe Size	B N.P.T.	Top Size	
Butt-Weld (SCH 10) / No-Hub			
6 [152]	5 [127]	8 [203]	7 [3]

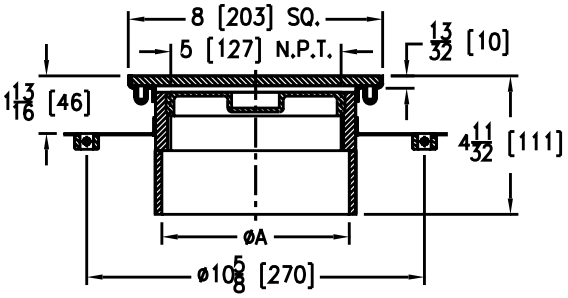

*Regularly furnished unless otherwise specified.
Items designated as Best Sellers are most specified and are generally in stock for shipment.
This symbol denotes a product that is engineered to reduce installation and rework time.

SANI-FLOR RECEPTORS

SANI-FLOR RECEPTORS – MATERIAL SELECTION	**348**
SANI-FLOR RECEPTORS – OPTIONS AND VARIATIONS	**348**
Z1900 12" X 12" A.R.E. SANI-FLOR RECEPTOR WITH 6" SUMP DEPTH	**349**
⏲ **Z1900-RL** 12" X 12" X 6" REPLACEMENT FLOOR SINK LINER	**350**
Z1901 12" X 12" A.R.E. SANI-FLOR RECEPTOR WITH 8" SUMP DEPTH	**351**
⏲ **Z1901-RL** 12" X 12" X 8" REPLACEMENT FLOOR SINK LINER	**352**
Z1902 12" X 12" A.R.E. SANI-FLOR RECEPTOR WITH 10" SUMP DEPTH	**353**
⏲ **Z1902-RL** 12" X 12" X 10" REPLACEMENT FLOOR SINK LINER	**354**
⏲ **Z1903** SANI-FLOR RECEPTOR INSTALLATION STABILIZER	**354**
Z1910 8" X 8" A.R.E. SANI-FLOR RECEPTOR WITH 6" SUMP DEPTH	**355**
⏲ **Z1910-RL** 8" X 8" X 6" REPLACEMENT FLOOR SINK LINER	**356**
Z1920 16" X 16" A.R.C. SANI-FLOR RECEPTOR WITH 7" SUMP DEPTH	**357**
Z1926 16" X 16" A.R.C. SANI-FLOR RECEPTOR WITH 12" SUMP DEPTH	**358**
Z1930 8" X 4" A.R.C. SANI-FLOR RECEPTOR WITH 4" SUMP DEPTH	**359**
Z1940 12" X 6" A.R.C. SANI-FLOR RECEPTOR WITH 8" SUMP DEPTH	**360**
Z1950 12" DIAMETER A.R.E. SANI-FLOR RECEPTOR WITH 8" SUMP DEPTH	**361**
Z1960 8" DIAMETER A.R.E. SANI-FLOR RECEPTOR WITH 6" SUMP DEPTH	**362**
Z1970 9" DIAMETER SHALLOW A.R.C. SANI-FLOR RECEPTOR WITH 3" SUMP DEPTH	**363**
Z1982 12" X 12" STAINLESS STEEL SANI-FLOR CAN WASH DRAIN WITH 8" SUMP DEPTH	**364**
Z1995 24" X 16" A.R.C. SANI-FLOR RECEPTOR WITH 17" SUMP DEPTH	**364**

SANI-FLOR RECEPTORS – MATERIAL SELECTION

A.R.C. Acid Resisting Epoxy Coating is a baked-on powder coating which produces a smooth, hard, high gloss finish. This epoxy based coating offers high impact resistance and excellent life expectancy in all drainage applications.

A.R.E. Acid Resisting Porcelain Enamel is a substantially vitreous inorganic coating bonded to metal by fusion at a high temperature above 800°F. This coating offers excellent acid, abrasion, and wear resistance. The coating is extremely hard and is the ultimate for sanitation in drainage application.

SANI-FLOR RECEPTORS – OPTIONS AND VARIATIONS

Zurn Sani-Flor Receptor options are specified as a PREFIX and/or SUFFIX letter or number added to the series designation. Each floor sink in the catalog is listed with its individual Prefix/Suffix variation.

PREFIXES	
Z	Cast iron body with white acid resisting porcelain enamel (A.R.E.) interior and top.
ZN	Cast iron body with white acid resisting porcelain enamel (A.R.E.) interior and nickel bronze top.

SUFFIXES	
–C	Clamp Collar
–DX	Dex-O-Tex Flange
–HD	Stainless Steel Frame with Extra-Heavy-Duty Stainless Steel Grate - Specify in areas where working load exceeds 2000 pounds or where extreme chemical resistance properties are required.
–HP	Heel-Proof Grate
–K	Anchor Flange
–KC	Anchor Flange with Seepage Holes and Clamp Collar
–LD	Less Internal Bottom Dome Strainer
–LS	Less Secondary Strainer
–P	1/2″ Threaded Trap Primer Connection (See Z1023)
–S	Secondary Strainer
–T	Square Nickel Bronze Top
–TC	Neo-Loc Test Cap Gasket 2″-4″ NL Bottom Outlet Only
–VPS	Vandal-Proof Strainer
–WB	Water Supply Control Box
–1	Less Grate - Receives multiple indirect wastes from either condensate lines, air conditioners or other indirect drainage equipment specifically located in non-traffic areas.
–2	Half Grate - Receives indirect waste as with Suffix –1, but with 1/2 grate opening to easily accept waste from a single direction while providing a finished floor drain top on the opposite side.
–3	Three-Quarter Grate - Receives indirect waste as with Suffix –1, but with 3/4 grate and 1/4 opening to easily accept waste from a single source.
–4	Full Grate with Center Opening - Receives indirect waste as with Suffix -1, but with square center opening to accept waste from multiple directions.
–5	Grate with 4″ Diameter x 3-3/4″ High Funnel
–6	Grate with 6″ Diameter x 6″ High Funnel - Receives indirect waste from single pipe using round funnel which is centrally located on grate. Prevents splashing of waste around entire receptor. Can be relocated at job site to meet project requirements.
–7	Grate with 6-3/4″ x 3″ x 1″ High Oval Funnel
–8	Grate with 8-7/8″ x 3-5/8″ x 3-3/4″ High Oval Funnel - Receives indirect waste from a series of pipe discharges using oval funnel which is centrally located on grate. Can be relocated at job site to meet project requirements.
–9	Angle Frame and Grate - Used in food handling facilities incorporating a two-fold purpose. An angle drain provides a sanitary floor drain in an open service area where open half of grate is hidden inside cabinetry to receive an indirect waste discharge. Two-piece construction further enhances the ultimate in sanitation standards.
–11	Vandal-Proof Secured Grate - Prevents removal of grate by unauthorized individuals.
–12	Depressed Aluminum Grate - Specified for areas in restaurants, food markets, taverns, and many non-traffic areas. Grate recess accumulates food particles rather than let them fall into receptor.
–15	Solid Loose Set Cover - Specified when receptor is to be inactive a majority of the time.
–16	Half Solid Loose Set Cover - Same as Suffix –15, but with 1/2 cover open to accept indirect waste.

SUFFIXES	
–17	Three-Quarter Solid Loose Set Cover - Same as Suffix –16, but with 3/4 cover inactive.
–18	Solid Loose Set Cover with Square Center Opening - Same as Suffix –16, but with center opening and balance of cover inactive.
–19	Full Hinged Grate - Specified in light traffic areas where grate removal is prohibited for any length of time.
–23	Aluminum Sediment Bucket - Specified when interception and retention of solids is necessary. Used in food preparation areas.
–25	White Acid Resisting Sediment Bucket - Same as Suffix –23, but with acid resisting finish.
–31	Stainless Mesh Liner for Sediment Bucket - Specified when retention of fine particles is required. Provided with screen having 331 holes per square inch.
–32	Aluminum Dome Strainer
–33	White Acid Resisting Anti-Splash Dome Strainer - Use in areas where harsh chemicals or substances enter receptor.
–34	Nickel Bronze Anti-Splash Dome Strainer

-1 Less Grate

-2 Half Grate

-3 Three-Quarter Grate

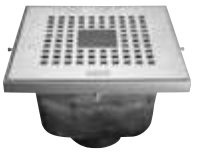

-4 Full Grate with Center Opening

-5, -6 Grate with Round Funnel

-7, -8 Grate with Oval Funnel

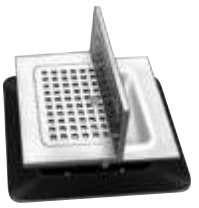

-9 Angle Frame and Grate

-12 Depressed Aluminum Grate

**Regularly furnished unless otherwise specified.*

Items designated as Best Sellers are most specified and are generally in stock for shipment.

This symbol denotes a product that is engineered to reduce installation and rework time.

Z1900 12″ X 12″ A.R.E. SANI-FLOR RECEPTOR WITH 6″ SUMP DEPTH

ENGINEERING SPECIFICATION

Zurn Z1900 Sani-Flor receptor, 12″ x 12″ x 6″ features deep cast iron body, square light-duty grate with 1/2″ slotted openings, and white acid resisting porcelain enamel interior and top – complete with white ABS anti-splash interior bottom dome strainer.

NOTE

†Add 1/2″ to 12″ dimension when specifying ZN1900 or ZS1900.

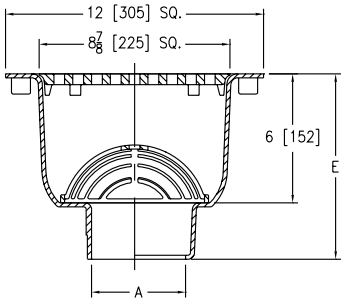

Dimensions in inches [mm]			Approximate Weight lb [kg]	Grate Open Area sq in [cm²]
A Pipe Size/ Outlet Type	E Body Height Dimensions			
	Z	ZN/ZS		
Inside Caulk (IC)				
3IC, 4IC	8-5/8 [219]	9-1/8 [232]	32 [15]	31 [200]
No-Hub (NH)				
2NH, 3NH, 4NH	8-5/8 [219]	9-1/8 [232]	32 [15]	31 [200]
Neo-Loc (NL)				
2NL, 3NL, 4NL	8 [203]	8-1/2 [216]	32 [15]	31 [200]

PREFIXES	DESCRIPTION	A PIPE SIZE	Z (A.R.E.)	ZN (N.B.)	ZS
Z1900*	Cast Iron Body with A.R.E. Interior and Top	2″, 3″, 4″	2,110.00	–	–
ZN1900†	Cast Iron Body with White A.R.E. Interior and Top, 12-1/2″ Square N.B. Frame and Full Grate with 1/2″ Square Openings	2″, 3″, 4″	–	2,857.00	–
ZS1900†	Cast Iron Body with White A.R.E. Interior and Top, 12-1/2″ Square Stainless Steel Frame and Full Grate with 1/2″ Openings	2″, 3″, 4″	–	–	4,330.00

OUTLETS (SPECIFY PIPE SIZE IN INCHES AND TYPE OF OUTLET)					
OUTLET	TYPE	PIPE SIZE/ OUTLET TYPE			ADD
IC	Inside Caulk	3IC, 4IC	N/C	N/C	N/C
NH	No-Hub	2NH, 3NH, 4NH	N/C	N/C	N/C
NL	Neo-Loc	2NL, 3NL, 4NL	N/C	N/C	N/C

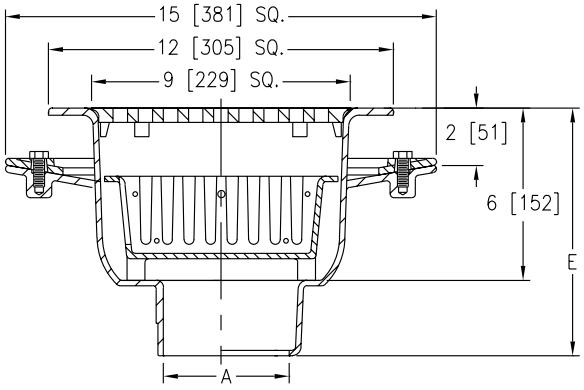

-KC-Z3 Options Shown

SUFFIXES		Z (A.R.E.)	ZN (N.B.)	ADD ZS
–DX	Dex-O-Tex Flange (ZN Only)	N/A	1,143.00	N/A
–HD	Stainless Steel Frame with Extra-Heavy-Duty Stainless Steel Grate (ZS Only)	N/A	N/A	1,199.00
–HP	Heel-Proof Grate (ZN Only)	N/A	696.00	N/A
–K	Anchor Flange	385.00	385.00	385.00
–KC	Anchor Flange with Seepage Holes and Clamp Collar	580.00	580.00	580.00
–P	1/2″ Trap Primer Connection (See Z1023)	194.00	194.00	194.00
◷ **–SA**	Stabilizer Assembly (See Z1903)	206.00	206.00	206.00
◷ **–TC**	Neo-Loc Test Cap Gasket (2″, 3″, 4″ NL Bottom Outlet Only)	24.00	24.00	24.00
–VPS	Vandal-Proof Strainer (NH outlet only)	312.00	312.00	312.00
–2	1/2 Grate	N/C	N/C	N/C
–3	3/4 Grate	N/C	N/C	N/C
–4	Full Grate with Center Opening (2″ Round for Z and 3-1/32″ Square for ZN or ZS)	178.00	178.00	178.00
–6	Grate with 6″ Dia. x 6″ High Funnel	488.00	626.00	1,555.00
–8	Grate with 8-7/8″ x 3-5/8″ x 3-3/4″ High Oval Funnel	531.00	883.00	2,424.00
–11	Vandal-Proof Secured Grate (ZN and ZS Only)	N/A	79.00	79.00
–15	Solid Loose Set Cover (Z and ZN Only)	116.00	228.00	N/A
–19	Full Hinged Grate (ZN Only)	N/A	351.00	N/A
–23	Aluminum Bucket	318.00	318.00	318.00
–25	White A.R.C. Bucket	597.00	597.00	597.00
–31	Stainless Steel Mesh Liner for Bucket	472.00	472.00	472.00
–32	Aluminum Dome Strainer	N/C	N/C	N/C
–33	White A.R.C. Anti-Splash Bottom Dome Strainer	343.00	343.00	343.00
				DEDUCT
		Z (A.R.E.)	ZN (N.B.)	ZS
–LD	Less Bottom Dome Strainer	- 61.00	- 61.00	- 61.00
–1	Less Grate	- 228.00	- 489.00	- 1,230.00

BEST SELLERS	LIST PRICE
Z1900-2NH-2	2,110.00
ZN1900-2NH-2	2,857.00
ZN1900-2NH-2-33	3,200.00
Z1900-2NL-2	2,110.00
Z1900-3NH-2	2,110.00
Z1900-3NH-33-KC	3,033.00
ZN1900-3NH-2-32	2,857.00
Z1900-3NL-2	2,110.00
Z1900-3NL-3	2,110.00
ZN1900-3NL	2,857.00
Z1900-4NH-2	2,110.00
ZN1900-4NL	2,857.00

**Regularly furnished unless otherwise specified.*

Items designated as Best Sellers are most specified and are generally in stock for shipment.

◷ *This symbol denotes a product that is engineered to reduce installation and rework time.*

For additional product information, please visit www.zurn.com

Z1900-RL 12″ X 12″ X 6″ REPLACEMENT FLOOR SINK LINER

ENGINEERING SPECIFICATION

Zurn Z1900-RL 12″ x 12″ x 6″ deep replacement floor sink liner features 18 gage, all Type 304 (CF8) fabricated stainless steel, internal pipe gasket seal, light-duty, slotted, loose set grate, and perforated removable dome strainer.

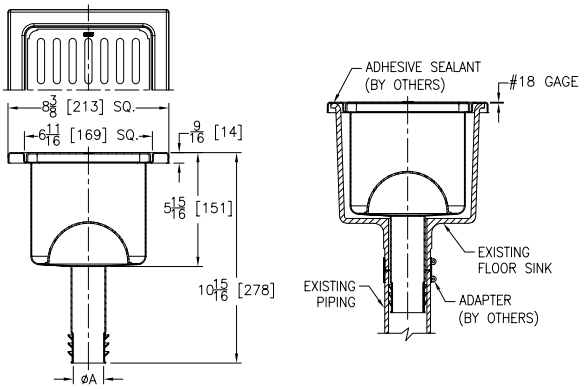

Dimensions in inches [mm]	Approximate Weight lb [kg]	Grate Open Area sq in [cm²]
A Pipe Size		
Gasket Seal		
2 [51], 3 [76], 4 [102]	6 [3]	21.1 [136]

PREFIXES	DESCRIPTION	A PIPE SIZE	LIST PRICE
Z1900*	All Type 304 (CF8) Fabricated Stainless Steel	2″, 3″ 4″	1,984.00
OUTLETS (SPECIFY PIPE SIZE IN INCHES AND TYPE OF OUTLET)			
OUTLET TYPE		PIPE SIZE/OUTLET TYPE	ADD
RL	Gasket Seal	RL2, RL3, RL4	N/C
SUFFIXES			ADD
–2	1/2 Grate		N/C
–3	3/4 Grate		N/C
–Y	Sediment Bucket		223.00
			DEDUCT
–1	Less Grate		- 150.00
BEST SELLERS			LIST PRICE
Z1900-RL2			1,984.00
Z1900-RL2-2			1,984.00
Z1900-RL3			1,984.00
Z1900-RL3-2			1,984.00
Z1900-RL4-2			1,984.00

For additional product information, please visit www.zurn.com

**Regularly furnished unless otherwise specified.*
Items designated as Best Sellers are most specified and are generally in stock for shipment.
This symbol denotes a product that is engineered to reduce installation and rework time.

Z1901 12″ X 12″ A.R.E. SANI-FLOR RECEPTOR WITH 8″ SUMP DEPTH

ENGINEERING SPECIFICATION

Zurn Z1901 Sani-Flor receptor features 12″ x 12″ x 8″ deep cast iron body, square, light-duty grate with 1/2″ slotted openings, and white acid resisting porcelain enamel interior and top – complete with white ABS anti-splash interior bottom dome strainer.

NOTE

†Add 1/2″ to 12″ dimension when specifying ZN1901 or ZS1901.

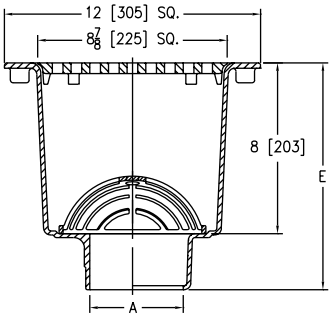

Dimensions in inches [mm]			Approximate Weight lb [kg]	Grate Open Area sq in [cm²]
A Pipe Size/ Outlet Type	E Body Height Dimensions			
	Z	ZN/ZS		
Inside Caulk (IC)				
3IC, 4IC	10-5/8 [270]	11-1/8 [283]	34 [15]	31 [200]
No-Hub (NH)				
2NH, 3NH, 4NH	10-5/8 [270]	11-1/8 [283]	34 [15]	31 [200]
Neo-Loc (NL)				
2NL, 3NL, 4NL	10 [254]	10-1/2 [267]	34 [15]	31 [200]

PREFIXES	DESCRIPTION	A PIPE SIZE	Z (A.R.E.)	ZN (N.B.)	ZS
Z1901*	Cast Iron Body with White A.R.E. Interior and Top	2″, 3″, 4″	2,221.00	–	–
ZN1901†	Cast Iron Body with White A.R.E. Interior and Top, 12-1/2″ Square N.B. Frame and Full Grate with 1/2″ Square Openings	2″, 3″, 4″	–	2,966.00	–
ZS1901†	Cast Iron Body with White A.R.E. Interior and Top, 12-1/2″ Square Stainless Steel Frame and Full Grate with 1/2″ Square Openings	2″, 3″, 4″	–	–	4,436.00

OUTLETS (SPECIFY PIPE SIZE IN INCHES AND TYPE OF OUTLET)

OUTLET	TYPE	PIPE SIZE/ OUTLET TYPE			ADD
IC	Inside Caulk	3IC, 4IC	N/C	N/C	N/C
NH	No-Hub	2NH, 3NH, 4NH	N/C	N/C	N/C
NL	Neo-Loc	2NL, 3NL, 4NL	N/C	N/C	N/C

SUFFIXES		Z (A.R.E.)	ZN (N.B.)	ADD ZS
–DX	Dex-O-Tex Flange (ZN Only)	N/A	1,143.00	N/A
–HD	Stainless Steel Frame with Extra-Heavy-Duty Stainless Steel Grate (ZS Only)	N/A	N/A	1,199.00
–HP	Heel-Proof Grate (ZN Only)	N/A	696.00	N/A
–K	Anchor Flange	385.00	385.00	385.00
–KC	Anchor Flange with Seepage Holes and Clamp Collar	580.00	580.00	580.00
–P	1/2″ Trap Primer Connection (See Z1023)	194.00	194.00	194.00
–TC	Neo-Loc Test Cap Gasket (2″, 3″, 4″ NL Bottom Outlet Only)	24.00	24.00	24.00
–VPS	Vandal-Proof Strainer (NH outlet only)	312.00	312.00	312.00
–2	1/2 Grate	N/C	N/C	N/C
–3	3/4 Grate	N/C	N/C	N/C
–4	Full Grate with Center Opening (2″ Round for Z and 3-1/32″ Square for ZN or ZS)	178.00	178.00	178.00
–6	Grate with 6″ Dia. x 6″ High Funnel	488.00	626.00	1,555.00
–8	Grate with 8-7/8″ x 3-5/8″ x 3-3/4″ High Oval Funnel	531.00	883.00	2,424.00
–11	Vandal-Proof Secured Grate (ZN and ZS Only)	N/A	79.00	79.00
–15	Solid Loose Set Cover (Z and ZN Only)	116.00	228.00	N/A
–19	Full Hinged Grate (ZN Only)	N/A	351.00	N/A
–23	Aluminum Bucket	318.00	318.00	318.00
–25	White A.R.C. Bucket	597.00	597.00	597.00
–31	Stainless Steel Mesh Liner for Bucket	472.00	472.00	472.00
–32	Aluminum Dome Strainer	N/C	N/C	N/C
–33	White A.R.C. Anti-Splash Bottom Dome Strainer	343.00	343.00	343.00

		Z (A.R.E.)	ZN (N.B.)	DEDUCT ZS
–LD	Less Bottom Dome Strainer	- 61.00	- 61.00	- 61.00
–1	Less Grate	- 228.00	- 489.00	- 1,230.00

BEST SELLERS	LIST PRICE
Z1901-2NH-2	2,221.00
Z1901-2NH-2-32	2,221.00
Z1901-3NH	2,221.00
Z1901-3NH-2	2,221.00
Z1901-3NH-2-25	2,818.00
ZN1901-3NH-2	2,966.00
ZN1901-3NH-2-33-KC	3,889.00
Z1901-3NL	2,221.00
Z1901-3NL-2-32	2,221.00
ZN1901-3NL-2	2,966.00
Z1901-4NH-2	2,221.00
ZN1901-4NH-2	2,966.00
Z1901-4NL	2,221.00
Z1901-4NL-2	2,221.00
ZN1901-4NL-2	2,966.00

**Regularly furnished unless otherwise specified.*

Items designated as Best Sellers are most specified and are generally in stock for shipment.

This symbol denotes a product that is engineered to reduce installation and rework time.

For additional product information, please visit www.zurn.com

Z1901-RL 12″ X 12″ X 8″ REPLACEMENT FLOOR SINK LINER

ENGINEERING SPECIFICATION

Zurn Z1901-RL 12″ x 12″ x 8″ deep replacement floor sink liner features 18 gage, all Type 304 (CF8) fabricated stainless steel, internal pipe gasket seal, light-duty, slotted, loose set grate, and perforated removable dome strainer.

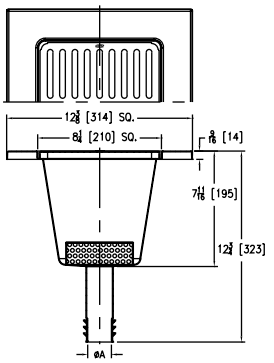

A Pipe Size inches [mm]	Approximate Weight lb [kg]	Grate Open Area sq in [cm²]
Gasket Seal		
2 [51], 3 [76], 4 [102]	7 [3]	21.7 [140]

PREFIXES	DESCRIPTION	A PIPE SIZE	LIST PRICE
Z1901*	All Type 304 (CF8) Fabricated Stainless Steel	2″, 3″, 4″	2,131.00
OUTLETS (SPECIFY PIPE SIZE IN INCHES AND TYPE OF OUTLET)			
OUTLET TYPE		PIPE SIZE/OUTLET TYPE	ADD
RL	Gasket Seal	RL2, RL3, RL4	N/C
SUFFIXES			ADD
–2	1/2 Grate		N/C
–3	3/4 Grate		N/C
–Y	Sediment Bucket		223.00
			DEDUCT
–1	Less Grate		- 150.00
SEE LEGACY ADDENDUM ON PAGE 369 FOR MORE INFORMATION			

Z1902 12″ X 12″ A.R.E. SANI-FLOR RECEPTOR WITH 10″ SUMP DEPTH

ENGINEERING SPECIFICATION

Zurn Z1902 Sani-Flor receptor features 12″ x 12″ x 10″ deep cast iron body, square, light-duty grate with 1/2″ slotted openings, and white acid resisting porcelain enamel interior and top – complete with white ABS anti-splash interior bottom dome strainer.

NOTE

†Add 1/2″ to 12″ dimension when specifying ZN1902 or ZS1902.

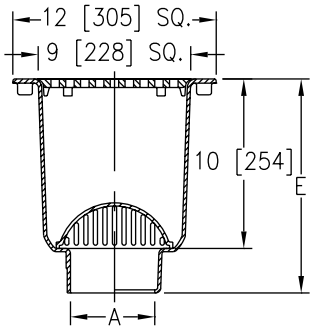

Dimensions in inches [mm]			Approximate Weight lb [kg]	Grate Open Area sq in [cm²]
A Pipe Size/ Outlet Type	E Body Height Dimensions			
	Z	ZN/ZS		
Inside Caulk (IC)				
3IC, 4IC	12-5/8 [321]	13-1/8 [333]	36 [16]	31 [200]
No-Hub (NH)				
2NH, 3NH, 4NH	12-5/8 [321]	13-1/8 [333]	36 [16]	31 [200]
Neo-Loc (NL)				
2NL, 3NL, 4NL	12 [305]	12-1/2 [318]	36 [16]	31 [200]

PREFIXES	DESCRIPTION	A PIPE SIZE	Z (A.R.E.)	ZN (N.B.)	ZS
Z1902*	Cast Iron Body with White A.R.E. Interior and Top	2″, 3″, 4″	2,347.00	–	–
ZN1902†	Cast Iron Body with White A.R.E. Interior and Top, 12-1/2″ Square N.B. Frame and Full Grate with 1/2″ Square Openings	2″, 3″, 4″	–	3,090.00	–
ZS1902†	Cast Iron Body with White A.R.E. Interior and Top, 12-1/2″ Square Stainless Steel Frame and Full Grate with 1/2″ Square Openings	2″, 3″, 4″	–	–	4,562.00

OUTLETS (SPECIFY PIPE SIZE IN INCHES AND TYPE OF OUTLET)					
OUTLET	TYPE	PIPE SIZE/ OUTLET TYPE			ADD
IC	Inside Caulk	3IC, 4IC	N/C	N/C	N/C
NH	No-Hub	2NH, 3NH, 4NH	N/C	N/C	N/C
NL	Neo-Loc	2NL, 3NL, 4NL	N/C	N/C	N/C

SUFFIXES				ADD
		Z (A.R.E.)	ZN (N.B.)	ZS
–DX	Dex-O-Tex Flange (ZN Only)	N/A	1,143.00	N/A
–HD	Stainless Steel Frame with Extra-Heavy-Duty Stainless Steel Grate (ZS Only)	N/A	N/A	1,199.00
–HP	Heel-Proof Grate (ZN Only)	N/A	696.00	N/A
–K	Anchor Flange	385.00	385.00	385.00
–KC	Anchor Flange with Seepage Holes and Clamp Collar	580.00	580.00	580.00
–P	1/2″ Trap Primer Connection (See Z1023)	194.00	194.00	194.00
–SA	Stabilizer Assembly (See Z1903)	206.00	206.00	206.00
–TC	Neo-Loc Test Cap Gasket (2″, 3″, 4″ NL Bottom Outlet Only)	24.00	24.00	24.00
–VPS	Vandal-Proof Strainer (NH outlet only)	312.00	312.00	312.00
–2	1/2 Grate	N/C	N/C	N/C
–3	3/4 Grate	N/C	N/C	N/C
–4	Full Grate with Center Opening (2″ Round for Z and 3-1/32″ Square for ZN or ZS)	178.00	178.00	178.00
–6	Grate with 6″ Dia. x 6″ High Funnel	488.00	626.00	1,555.00
–8	Grate with 8-7/8″ x 3-5/8″ x 3-3/4″ High Oval Funnel	531.00	883.00	2,424.00
–11	Vandal-Proof Secured Grate (ZN and ZS Only)	N/A	79.00	79.00
–15	Solid Loose Set Cover (Z and ZN Only)	116.00	228.00	N/A
–19	Full Hinged Grate (ZN Only)	N/A	351.00	N/A
–23	Aluminum Bucket	318.00	318.00	318.00
–25	White A.R.C. Bucket	597.00	597.00	597.00
–31	Stainless Steel Mesh Liner for Bucket	472.00	472.00	472.00
–32	Aluminum Dome Strainer	N/C	N/C	N/C
–33	White A.R.C. Anti-Splash Bottom Dome Strainer	343.00	343.00	343.00
				DEDUCT
		Z (A.R.E.)	ZN (N.B.)	ZS
–LD	Less Bottom Dome Strainer	- 61.00	- 61.00	- 61.00
–1	Less Grate	- 228.00	- 489.00	- 1,230.00

BEST SELLERS	LIST PRICE
Z1902-2NH-2	2,347.00
Z1902-3NH	2,347.00
Z1902-3NH-2	2,347.00
ZN1902-3NH-2-23-KC	3,988.00
Z1902-3NL	2,347.00
Z1902-3NL-2	2,347.00
Z1902-4NH-2	2,347.00
Z1902-4NH-K	2,732.00
ZN1902-4NH-2	3,090.00
ZN1902-4NH-KC	3,670.00
Z1902-4NL	2,347.00
Z1902-4NL-2	2,347.00

*Regularly furnished unless otherwise specified.

Items designated as Best Sellers are most specified and are generally in stock for shipment.

This symbol denotes a product that is engineered to reduce installation and rework time.

For additional product information, please visit www.zurn.com

Z1902-RL 12" X 12" X 10" REPLACEMENT FLOOR SINK LINER

ENGINEERING SPECIFICATION

Zurn Z1902-RL 12" x 12" x 10" deep replacement floor sink liner features 18 gage, all Type 304 (CF8) fabricated stainless steel, internal pipe gasket seal, light-duty, slotted, loose set grate, and perforated removable dome strainer.

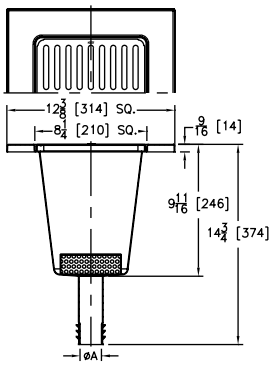

A Pipe Size inches [mm]	Approximate Weight lb [kg]	Grate Open Area sq in [cm²]
Gasket Seal		
2 [51], 3 [76], 4 [102]	8 [4]	21.7 [140]

PREFIXES	DESCRIPTION	A PIPE SIZE	LIST PRICE
Z1902*	All Type 304 (CF8) Fabricated Stainless Steel	2", 3", 4"	2,290.00
OUTLETS (SPECIFY PIPE SIZE IN INCHES AND TYPE OF OUTLET)			
OUTLET TYPE		PIPE SIZE/OUTLET TYPE	ADD
RL	Gasket Seal	RL2, RL3, RL4	N/C
SUFFIXES			ADD
–2	1/2 Grate		N/C
–3	3/4 Grate		N/C
–Y	Sediment Bucket		223.00
			DEDUCT
–1	Less Grate		- 150.00
SEE LEGACY ADDENDUM ON PAGE 369 FOR MORE INFORMATION			

Z1903 SANI-FLOR RECEPTOR INSTALLATION STABILIZER

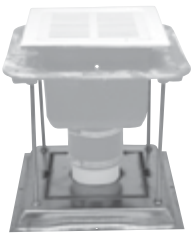

Patented

ENGINEERING SPECIFICATION

Zurn Z1903 Sani-Flor receptor installation stabilizer features a 16-gage, galvanized steel plate with variable pipe opening, four support stud holes, and four nail holes. Comes complete with hardware bag containing four 3/8"-16 x 12" long studs, eight 3/8"-16 flange locknuts and coverplate with hole for standard 2" pipe size and perforated knockouts for 3" and 4" pipe connections. (For use with Z1900, Z1901, and Z1902 Sani-Flor receptors.)

NOTE

Stabilizer plate may be used without coverplate for narrow floor applications where the drain body will be recessed into stabilizer plate.

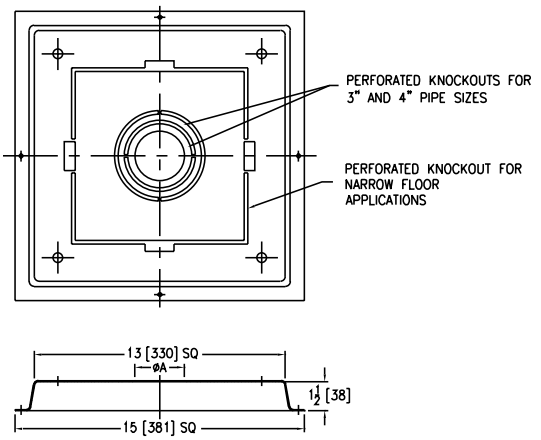

Dimensions in inches [mm]	
Pipe Size	A Diameter
2 [51]	2-9/16 [65]
3 [76]	3-11/16 [94]
4 [102]	4-11/16 [119]

PREFIXES	DESCRIPTION	PIPE SIZE	LIST PRICE
Z1903*	Sani-Flor Receptor Installation Stabilizer	2", 3" 4"	206.00

For additional product information, please visit www.zurn.com

**Regularly furnished unless otherwise specified.*

Items designated as Best Sellers are most specified and are generally in stock for shipment.

This symbol denotes a product that is engineered to reduce installation and rework time.

Z1910 8″ X 8″ A.R.E. SANI-FLOR RECEPTOR WITH 6″ SUMP DEPTH

ENGINEERING SPECIFICATION

Zurn Z1910 Sani-Flor receptor features 8″ x 8″ x 6″ deep cast iron body, square medium-duty grate with 7/16″ slotted openings, and white acid resisting porcelain enamel interior and top – complete with white ABS anti-splash interior bottom dome strainer.

NOTE

†Add 1/2″ to 8″ dimension when specifying ZN1910.

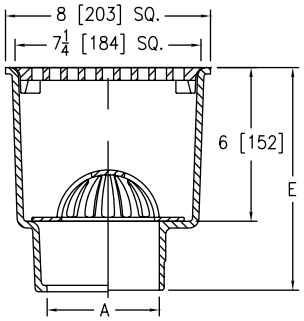

Dimensions in inches [mm]			Approximate Weight lb [kg]	Grate Open Area sq in [cm²]
A Pipe Size/ Outlet Type	E Body Height Dimensions			
	Z	ZN		
Inside Caulk				
3IC, 4IC	8-3/4 [222]	9-1/4 [235]	25 [11]	19 [123]
No-Hub (NH)				
2NH, 3NH, 4NH	8-5/8 [219]	9-1/8 [232]	25 [11]	19 [123]
Neo-Loc (NL)				
2NL, 3NL, 4NL	8 [203]	8-1/2 [216]	25 [11]	19 [123]

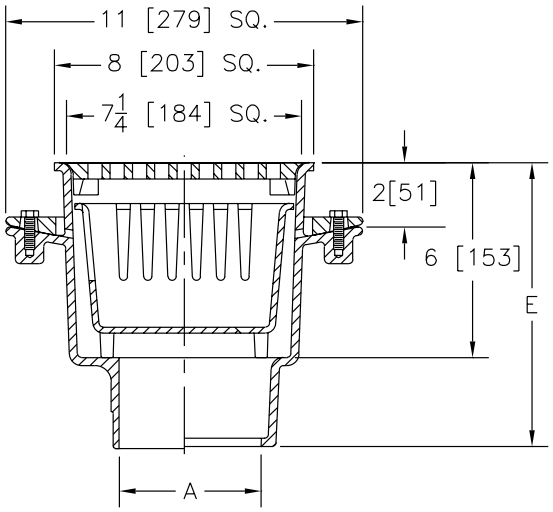

-KC-23 Options Shown

PREFIXES	DESCRIPTION	A PIPE SIZE	Z (A.R.E.)	ZN (N.B.)
Z1910*	Cast Iron Body with White A.R.E. Interior and Top	2″, 3″ 4″	1,576.00	–
ZN1910†	Cast Iron Body with White A.R.E. Interior and Top, 8-9/16″ Square N.B. Frame, and Full Grate with 5/16″ Square Openings	2″, 3″ 4″	–	1,999.00

OUTLETS (SPECIFY PIPE SIZE IN INCHES AND TYPE OF OUTLET)				
OUTLET TYPE		PIPE SIZE/ OUTLET TYPE		ADD
IC	Inside Caulk	3IC, 4IC	N/C	N/C
NH	No-Hub	2NH, 3NH, 4NH	N/C	N/C
NL	Neo-Loc	2NL, 3NL, 4NL	N/C	N/C

SUFFIXES		ADD Z (A.R.E.)	ADD ZN (N.B.)
–DX	Dex-O-Tex Flange (ZN Only)	N/A	972.00
–K	Anchor Flange	184.00	184.00
–KC	Anchor Flange with Seepage Holes and Clamp Collar	339.00	339.00
–P	1/2″ Trap Primer Connection (See Z1023)	194.00	194.00
◷ –TC	Neo-Loc Test Cap Gasket (2″, 3″, 4″ NL Bottom Outlet Only)	24.00	24.00
–2	1/2 Grate	N/C	N/C
–3	3/4 Grate	N/C	N/C
–4	Full Grate with Square Center Opening	178.00	178.00
–6	Grate with 6″ Dia. x 6″ High Funnel	488.00	626.00
–8	Grate with 8-7/8″ x 3-5/8″ x 3-3/4″ High Oval Funnel	531.00	876.00
–11	Vandal-Proof Secured Grate (ZN only)	N/A	76.00
–15	Solid Loose Set Cover	98.00	171.00
–19	Full Hinged Grate (ZN only)	N/A	351.00
–23	Aluminum Bucket	200.00	200.00
–25	White A.R.C. Bucket	433.00	433.00
–31	Stainless Steel Mesh Liner for Bucket	472.00	472.00
–32	Aluminum Dome Strainer	N/C	N/C
–33	White A.R.C. Anti-Splash Bottom Dome Strainer	318.00	318.00
		DEDUCT Z (A.R.E.)	DEDUCT ZN (N.B.)
–LD	Less Bottom Dome Strainer	- 61.00	- 61.00
–1	Less Grate	- 194.00	- 303.00

BEST SELLERS	LIST PRICE
Z1910-2NH	1,576.00
Z1910-2NH-2	1,576.00
Z1910-3NH-2	1,576.00
Z1910-3NH-2-25	2,009.00
ZN1910-3NH-2	1,999.00
ZN1910-3NH-2-23	2,199.00
Z1910-3NL	1,576.00
Z1910-3NL-2	1,576.00
ZN1910-3NL-2-32	1,999.00
Z1910-4NH-2	1,576.00
Z1910-4NL-2	1,576.00

**Regularly furnished unless otherwise specified.*

Items designated as Best Sellers are most specified and are generally in stock for shipment.

◷ This symbol denotes a product that is engineered to reduce installation and rework time.

For additional product information, please visit www.zurn.com

Z1910-RL 8″ X 8″ X 6″ REPLACEMENT FLOOR SINK LINER

ENGINEERING SPECIFICATION

Zurn Z1910-RL 8″ x 8″ x 6″ deep replacement floor sink liner features 18 gage, all Type 304 (CF8) fabricated stainless steel, internal pipe gasket seal, light-duty, slotted, loose set grate, and perforated removable dome strainer.

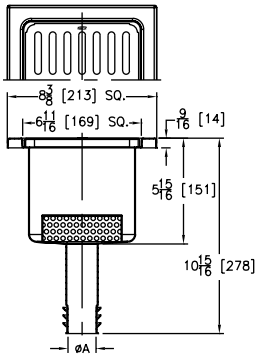

A Pipe Size inches [mm]	Approximate Weight lb [kg]	Grate Open Area sq in [cm²]
Gasket Seal		
2 [51], 3 [76], 4 [102]	5 [2]	12.2 [79]

PREFIXES	DESCRIPTION	A PIPE SIZE	LIST PRICE
Z1910*	All Type 304 (CF8) Fabricated Stainless Steel	2″, 3″, 4″	1,645.00
OUTLETS (SPECIFY PIPE SIZE IN INCHES AND TYPE OF OUTLET)			
OUTLET TYPE		PIPE SIZE/OUTLET TYPE	ADD
RL	Gasket Seal	RL2, RL3, RL4	N/C
SUFFIXES			ADD
–2	1/2 Grate		N/C
–3	3/4 Grate		N/C
–Y	Sediment Bucket		223.00
			DEDUCT
–1	Less Grate		- 150.00
SEE LEGACY ADDENDUM ON PAGE 369 FOR MORE INFORMATION			

Z1920 16″ X 16″ A.R.C. SANI-FLOR RECEPTOR WITH 7″ SUMP DEPTH

ENGINEERING SPECIFICATION

Zurn Z1920 Sani-Flor receptor features 16″ x 16″ x 7″ deep cast iron body, square, slotted heavy-duty grate, and white acid resisting epoxy coated interior and top – complete with aluminum anti-splash interior bottom dome strainer.

NOTE

†Add 3/4″ to 16″ dimension when specifying ZN1920.

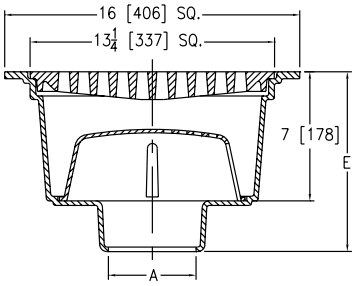

Dimensions in inches [mm]			Approximate Weight lb [kg]	Grate Open Area sq in [cm²]
A Pipe Size/ Outlet Type	E Body Height Dimensions			
	Z	ZN		
Inside Caulk (IC)				
2IC, 3IC, 4IC, 6IC	9-3/4 [248]	9-15/16 [252]	81 [37]	54 [348]
8IC	10-1/4 [260]	10-7/16 [265]		
Neo-Loc (NL)				
2NL, 3NL, 4NL	9 [229]	9-3/16 [233]	81 [37]	54 [348]

PREFIXES	DESCRIPTION	A PIPE SIZE	Z (A.R.C.)	ZN (N.B.)
Z1920*	Cast Iron Body with White A.R.C. Interior and Top	2″, 3″ 4″, 6″, 8″	4,314.00	–
ZN1920†	Cast Iron Body with White A.R.C. Interior and Top, 16-3/4″ Square N.B. Frame, and Full Slotted Grate	2″, 3″ 4″, 6″, 8″	–	5,529.00
OUTLETS (SPECIFY PIPE SIZE IN INCHES AND TYPE OF OUTLET)				
OUTLET TYPE		PIPE SIZE/OUTLET TYPE		ADD
IC	Inside Caulk	2IC, 3IC, 4IC, 6IC, 8IC	N/C	N/C
NL	Neo-Loc	2NL, 3NL, 4NL	N/C	N/C
				ADD
SUFFIXES			Z (A.R.C.)	ZN (N.B.)
–K	Anchor Flange		368.00	368.00
–KC	Anchor Flange with Seepage Holes and Clamp Collar		928.00	928.00
–P	1/2″ Trap Primer Connection		194.00	194.00
◷ –TC	Neo-Loc Test Cap Gasket (2″, 3″, 4″ NL Bottom Outlet Only)		24.00	24.00
–2	1/2 Grate		N/C	N/C
–3	3/4 Grate		N/C	N/C
–4	Full Grate with Square Center Opening		178.00	178.00
–6	Grate with 6″ Dia. x 6″ High Funnel		488.00	626.00
–8	Grate with 8-7/8″ x 3-5/8″ x 3-3/4″ High Oval Funnel		531.00	876.00
–11	Vandal-Proof Secured Grate		147.00	147.00
–15	Solid Loose Set Cover		150.00	615.00
–23	Aluminum Bucket		827.00	827.00
–25	White A.R.C. Bucket		2,327.00	2,327.00
–31	Stainless Steel Mesh Liner for Bucket		939.00	939.00
–33	White A.R.C. Anti-Splash Bottom Dome Strainer		318.00	318.00
				DEDUCT
			Z (A.R.C.)	ZN (N.B.)
–LD	Less Bottom Dome Strainer		- 61.00	- 61.00
–1	Less Grate		- 380.00	- 1,033.00

BEST SELLERS	LIST PRICE
Z1920-3NL	4,314.00
Z1920-3NL-P	4,508.00
Z1920-4NL	4,314.00
Z1920-4NL-2	4,314.00
Z1920-4NL-23	5,141.00
ZN1920-4NL-2-23	6,356.00

*Regularly furnished unless otherwise specified.

Items designated as Best Sellers are most specified and are generally in stock for shipment.

◷ This symbol denotes a product that is engineered to reduce installation and rework time.

For additional product information, please visit www.zurn.com

Z1926 16″ X 16″ A.R.C. SANI-FLOR RECEPTOR WITH 12″ SUMP DEPTH

ENGINEERING SPECIFICATION

Zurn Z1926 Sani-Flor receptor features 16″ x 16″ x 12″ deep cast iron body, seepage flange, square, heavy-duty grate with 9/16″ slotted openings, and white acid resisting epoxy coated interior and top – complete with aluminum anti-splash interior bottom dome strainer.

NOTE

†Add 3/4″ to 16″ dimension when specifying ZN1926.

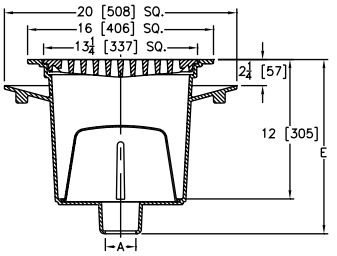

Dimensions in inches [mm]			Approximate Weight lb [kg]	Grate Open Area sq in [cm²]
A Pipe Size/ Outlet Type	E Body Height Dimensions			
	Z	ZN		
Inside Caulk (IC)				
3IC, 4IC, 6IC	15 [381]	15-3/16 [386]	150 [68]	54 [348]
No-Hub (NH)				
2NH, 3NH, 4NH, 6NH, 8NH	15 [381]	15-3/16 [386]	150 [68]	54 [348]
Neo-Loc (NL)				
2NL, 3NL, 4NL	14-1/4 [362]	14-7/16 [367]	150 [68]	54 [348]

PREFIXES	DESCRIPTION	A PIPE SIZE	Z (A.R.C.)	ZN (N.B.)
Z1926*	Cast Iron Body with White A.R.C. Interior and Top	2″, 3″ 4″, 6″, 8″	4,675.00	–
ZN1926†	Cast Iron Body with White A.R.C. Interior and Top, 16-3/4″ Square N.B. Frame, and Full Slotted Grate	2″, 3″ 4″, 6″, 8″	–	5,895.00
OUTLETS (SPECIFY PIPE SIZE IN INCHES AND TYPE OF OUTLET)				
OUTLET	**TYPE**	**PIPE SIZE/OUTLET TYPE**		**ADD**
IC	Inside Caulk	3IC, 4IC, 6IC	N/C	N/C
NH	No-Hub	2NH, 3NH, 4NH, 6NH, 8NH	N/C	N/C
NL	Neo-Loc	2NL, 3NL, 4NL	N/C	N/C
				ADD
SUFFIXES			**Z (A.R.C.)**	**ZN (N.B.)**
–C	Clamp Collar		561.00	561.00
–P	1/2″ Trap Primer Connection		194.00	194.00
⏲ –TC	Neo-Loc Test Cap Gasket (2″, 3″, 4″ NL Bottom Outlet Only)		24.00	24.00
–2	1/2 Grate		N/C	N/C
–3	3/4 Grate		N/C	N/C
–4	Full Grate with Square Center Opening		178.00	178.00
–6	Grate with 6″ Dia. x 6″ High Funnel		488.00	626.00
–8	Grate with 8-7/8″ x 3-5/8″ x 3-3/4″ High Oval Funnel		531.00	876.00
–11	Vandal-Proof Secured Grate		147.00	147.00
–15	Solid Loose Set Cover		150.00	615.00
–23	Aluminum Bucket		827.00	827.00
–25	White A.R.C. Bucket		2,327.00	2,327.00
–31	Stainless Steel Mesh Liner for Bucket		939.00	939.00
–33	White A.R.C. Anti-Splash Bottom Dome Strainer		318.00	318.00
				DEDUCT
			Z (A.R.C.)	**ZN (N.B.)**
–LD	Less Bottom Dome Strainer		- 61.00	- 61.00
–1	Less Grate		- 380.00	- 1,033.00

BEST SELLERS	LIST PRICE
Z1926-3NL	4,675.00
Z1926-4IC-2-23-31	6,441.00
Z1926-4NH	4,675.00
Z1926-4NH-2	4,675.00
Z1926-4NH-2-C	5,236.00
Z1926-4NH-C	5,236.00
ZN1926-4NH-2	5,895.00
Z1926-4NL	4,675.00
Z1926-6NH	4,675.00

For additional product information, please visit www.zurn.com

**Regularly furnished unless otherwise specified.*

Items designated as Best Sellers are most specified and are generally in stock for shipment.

⏲ *This symbol denotes a product that is engineered to reduce installation and rework time.*

Z1930 8″ X 4″ A.R.C. SANI-FLOR RECEPTOR WITH 4″ SUMP DEPTH

ENGINEERING SPECIFICATION

Zurn Z1930 Sani-Flor receptor features 8″ x 4″ x 4″ deep cast iron body and rectangular, square hole, light-duty grate with white acid resisting epoxy coated interior and top – complete with white ABS anti-splash interior bottom dome strainer.

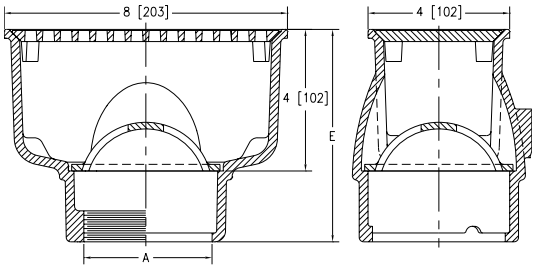

Dimensions in inches [mm]			Approximate Weight lb [kg]	Grate Open Area sq in [cm²]
A Pipe Size/ Outlet Type	E Body Height Dimensions			
	Z	ZN		
Inside Caulk (IC)				
3IC	6 [152]	6-3/8 [162]	11 [5]	7.5 [48]
Threaded (IP)				
2IP, 3IP	6 [152]	6-3/8 [162]	11 [5]	7.5 [48]
Neo-Loc (NL)				
2NL, 3NL	5-13/16 [148]	6-3/16 [157]	11 [5]	7.5 [48]

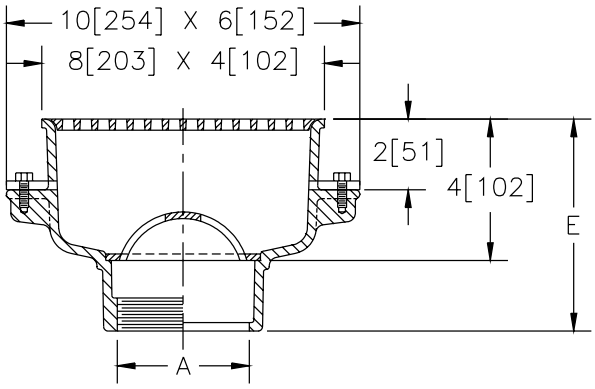

-KC Option Shown

Z1930-KC Sani-Flor Receptor, 8″ x 4″ x 4″ deep cast iron body and rectangular square hole light-duty grate with white acid resisting epoxy coated interior and top with seepage flange with seepage holes and clamp collar (-KC).

PREFIXES	DESCRIPTION	A PIPE SIZE	Z (A.R.C.)	ZN (N.B.)
Z1930*	Cast Iron Body with White A.R.C. Interior and Top	2″, 3″	1,625.00	–
ZN1930	Cast Iron Body with White A.R.C. Interior and Top, 8-3/4″ x 4-3/4″ N.B. Frame, and Full Grate with 5/16″ Square Openings	2″, 3″	–	1,949.00

OUTLETS (SPECIFY PIPE SIZE IN INCHES AND TYPE OF OUTLET)				
OUTLET	TYPE	PIPE SIZE/ OUTLET TYPE		ADD
IC	Inside Caulk	3IC	N/C	N/C
IP	Threaded	2IP, 3IP	N/C	N/C
NL	Neo-Loc	2NL, 3NL	N/C	N/C

			ADD
SUFFIXES		Z (A.R.C.)	ZN (N.B.)
–K	Anchor Flange	194.00	194.00
–KC	Anchor Flange with Seepage Holes and Clamp Collar	380.00	380.00
–P	1/2″ Trap Primer Connection (See Z1023)	194.00	194.00
–S	Secondary Strainer	N/C	N/C
–TC	Neo-Loc Test Cap Gasket (2″, 3″ NL Bottom Outlet Only)	24.00	24.00
–2	1/2 Grate	N/C	N/C
–3	3/4 Grate	N/C	N/C
–4	Full Grate with Square Center Opening	178.00	178.00
–6	Grate with 6″ Dia. x 6″ High Funnel	488.00	626.00
–8	Grate with 8-7/8″ x 3-5/8″ x 3-3/4″ High Oval Funnel	531.00	876.00
–11	Vandal-Proof Secured Grate (ZN only)	N/A	79.00
–15	Solid Loose Set Cover (ZN only)	N/A	171.00
–23	Aluminum Bucket	194.00	194.00
–25	White A.R.C. Bucket	472.00	472.00
–31	Stainless Steel Mesh Liner for Bucket	472.00	472.00
–32	Aluminum Dome Strainer	N/C	N/C
–33	White A.R.C. Anti-Splash Bottom Dome Strainer	318.00	318.00

			DEDUCT
		Z (A.R.C.)	ZN (N.B.)
–LD	Less Bottom Dome Strainer	- 61.00	- 61.00
–1	Less Grate	- 150.00	- 303.00

**Regularly furnished unless otherwise specified.*

Items designated as Best Sellers are most specified and are generally in stock for shipment.

This symbol denotes a product that is engineered to reduce installation and rework time.

Z1940 12″ X 6″ A.R.C. SANI-FLOR RECEPTOR WITH 8″ SUMP DEPTH

ENGINEERING SPECIFICATION

Zurn Z1940 Sani-Flor receptor features 12″ x 6″ x 8″ deep cast iron body and rectangular, square hole, light-duty grate with white acid resisting epoxy coated interior and top – complete with white ABS anti-splash interior bottom dome strainer.

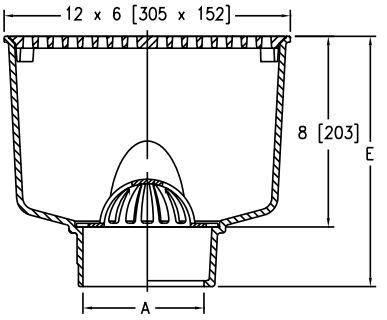

Dimensions in inches [mm]			Approximate Weight lb [kg]	Grate Open Area sq in [cm²]
A Pipe Size/ Outlet Type	E Body Height Dimensions			
	Z	ZN		
Inside Caulk (IC)				
2IC, 3IC, 4IC	10-1/2 [267]	10-7/8 [276]	28 [13]	17 [110]
No-Hub (NH)				
2NH, 3NH, 4NH	10-1/2 [267]	10-7/8 [276]	28 [13]	17 [110]
Neo-Loc (NL)				
2NL, 3NL, 4NL	10 [254]	10-3/8 [264]	28 [13]	17 [110]

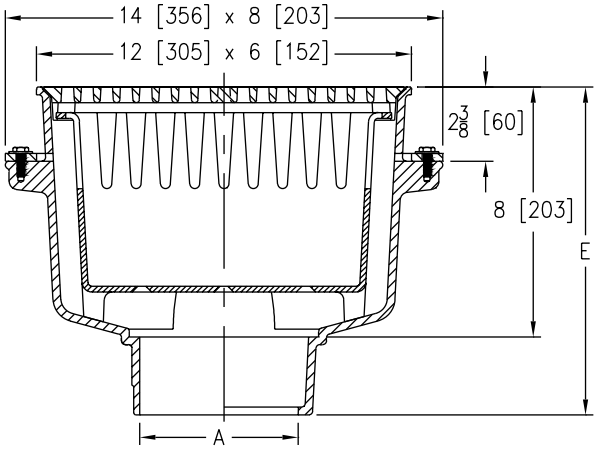

-KC-23 Options Shown

Z1940-KC-23 Sani-Flor Receptor, 12″ x 6″ x 8″ deep cast iron body and rectangular square hole light-duty grate with white acid resisting epoxy coated interior and top with seepage flange with seepage holes and clamp collar (-KC) and aluminum bucket (-23).

PREFIXES	DESCRIPTION	A PIPE SIZE	Z (A.R.C.)	ZN (N.B.)
Z1940*	Cast Iron Body with White A.R.C. Interior and Top	2″, 3″, 4″	2,144.00	–
ZN1940	Cast Iron Body with White A.R.C. Interior and Top, 13″ x 7″ N.B. Frame, and Full Grate with 3/8″ Square Openings	2″, 3, 4″	–	2,623.00
OUTLETS (SPECIFY PIPE SIZE IN INCHES AND TYPE OF OUTLET)				
OUTLET	**TYPE**	**PIPE SIZE/ OUTLET TYPE**		**ADD**
IC	Inside Caulk	2IC, 3IC, 4IC	N/C	N/C
NH	No-Hub	2NH, 3NH, 4NH	N/C	N/C
NL	Neo-Loc	2NL, 3NL, 4NL	N/C	N/C
				ADD
SUFFIXES			**Z (A.R.C.)**	**ZN (N.B.)**
–K	Anchor Flange		275.00	275.00
–KC	Anchor Flange with Seepage Holes and Clamp Collar		462.00	462.00
–P	1/2″ Trap Primer Connection (See Z1023)		194.00	194.00
–S	Secondary Strainer		N/C	N/C
⏲ –TC	Neo-Loc Test Cap Gasket (2″, 3″, 4″ NL Bottom Outlet Only)		24.00	24.00
–2	1/2 Grate		N/C	N/C
–3	3/4 Grate		N/C	N/C
–4	Full Grate with Square Center Opening		178.00	178.00
–6	Grate with 6″ Dia. x 6″ High Funnel		488.00	626.00
–8	Grate with 8-7/8″ x 3-5/8″ x 3-3/4″ High Oval Funnel		531.00	876.00
–11	Vandal-Proof Secured Grate (ZN only)		N/A	79.00
–15	Solid Loose Set Cover		98.00	171.00
–23	Aluminum Bucket		194.00	194.00
–25	White A.R.C. Bucket		472.00	472.00
–31	Stainless Steel Mesh Liner for Bucket		472.00	472.00
–32	Aluminum Dome Strainer		N/C	N/C
–33	White A.R.C. Anti-Splash Bottom Dome Strainer		318.00	318.00
				DEDUCT
			Z (A.R.C.)	**ZN (N.B.)**
–LD	Less Bottom Dome Strainer		- 61.00	- 61.00
–1	Less Grate		- 194.00	- 343.00
SEE LEGACY ADDENDUM ON PAGE 369 FOR MORE INFORMATION				

For additional product information, please visit www.zurn.com

**Regularly furnished unless otherwise specified.*

Items designated as Best Sellers are most specified and are generally in stock for shipment.

⏲ This symbol denotes a product that is engineered to reduce installation and rework time.

Z1950 12″ DIAMETER A.R.E. SANI-FLOR RECEPTOR WITH 8″ SUMP DEPTH

ENGINEERING SPECIFICATION

Zurn Z1950 Sani-Flor receptor features 12″ diameter x 8″ deep cast iron body, and round slotted, light-duty grate with white acid resisting porcelain enamel interior and top – complete with white ABS anti-splash interior bottom dome strainer.

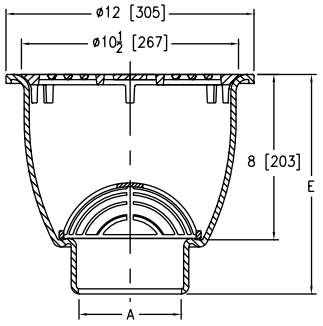

Dimensions in inches [mm]			Approximate Weight lb [kg]	Grate Open Area sq in [cm²]
A Pipe Size/ Outlet Type	E Body Height Dimensions			
	Z	ZN		
Inside Caulk (IC)				
3IC, 4IC	10-5/8 [270]	11 [279]	34 [15]	22 [142]
No-Hub (NH)				
2NH, 3NH, 4NH	10-5/8 [270]	11 [279]	34 [15]	22 [142]
Neo-Loc (NL)				
2NL, 3NL, 4NL	10 [254]	10-3/8 [264]	34 [15]	22 [142]

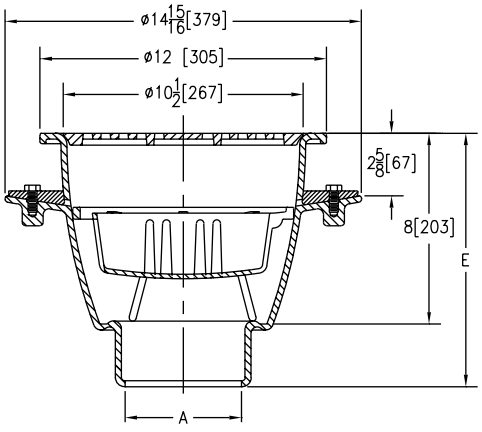

-KC-23 Options Shown

Z1950-KC-23 Sani-Flor Receptor, 12″ diameter x 8″ deep cast iron body and round slotted light-duty grate with white acid resisting porcelain enamel interior and top with seepage flange with seepage holes and clamp collar (-KC) and aluminum bucket (-23).

PREFIXES	DESCRIPTION	A PIPE SIZE	Z (A.R.E.)	ZN (N.B.)
Z1950*	Cast Iron Body with White A.R.E. Interior and Top	2″, 3″, 4″	1,674.00	–
ZN1950	Cast Iron Body with White A.R.E. Interior and Top, 12-1/2″ Round N.B. Frame, and Full Grate with 1/2″ Square Openings	2″, 3, 4″	–	2,668.00
OUTLETS (SPECIFY PIPE SIZE IN INCHES AND TYPE OF OUTLET)				
OUTLET	**TYPE**	**PIPE SIZE/ OUTLET TYPE**		**ADD**
IC	Inside Caulk	3IC, 4IC	N/C	N/C
NH	No-Hub	2NH, 3NH, 4NH	N/C	N/C
NL	Neo-Loc	2NL, 3NL, 4NL	N/C	N/C
				ADD
SUFFIXES			**Z (A.R.E.)**	**ZN (N.B.)**
–K	Anchor Flange		380.00	380.00
–KC	Anchor Flange with Seepage Holes and Clamp Collar		561.00	561.00
–P	1/2″ Trap Primer Connection (See Z1023, NH Only)		194.00	194.00
◷ –TC	Neo-Loc Test Cap Gasket (2″, 3″, 4″ NL Bottom Outlet Only)		24.00	24.00
–2	1/2 Grate		N/C	N/C
–3	3/4 Grate		N/C	N/C
–4	Full Grate with Center Opening		178.00	178.00
–6	Grate with 6″ Dia. x 6″ High Funnel		488.00	626.00
–8	Grate with 8-7/8″ x 3-5/8″ x 3-3/4″ High Oval Funnel		531.00	876.00
–11	Vandal-Proof Secured Grate (ZN only)		N/A	79.00
–15	Solid Loose Set Cover		116.00	228.00
–23	Aluminum Bucket		318.00	318.00
–25	White A.R.C. Bucket		472.00	472.00
–31	Stainless Steel Mesh Liner for Bucket		472.00	472.00
–32	Aluminum Dome Strainer		N/C	N/C
–33	White A.R.C. Anti-Splash Bottom Dome Strainer		318.00	318.00
				DEDUCT
			Z (A.R.E.)	**ZN (N.B.)**
–LD	Less Bottom Dome Strainer		- 61.00	- 61.00
–1	Less Grate		- 267.00	- 510.00

BEST SELLERS	LIST PRICE
Z1950-2NH-2	1,674.00
Z1950-3NH	1,674.00
Z1950-3NH-2	1,674.00
Z1950-3NH-2-K	2,054.00
Z1950-3NH-2-KC	2,235.00
Z1950-3NH-K	2,054.00
Z1950-3NH-KC	2,235.00
Z1950-3NL-2	1,674.00
ZN1950-3NL-2-32-KC	3,229.00
ZN1950-3NL-23-TC	3,010.00
Z1950-4NH	1,674.00
Z1950-4NH-2	1,674.00
Z1950-4NH-3-33	1,992.00
Z1950-4NL-2	1,674.00

**Regularly furnished unless otherwise specified.*

Items designated as Best Sellers are most specified and are generally in stock for shipment.

◷ *This symbol denotes a product that is engineered to reduce installation and rework time.*

For additional product information, please visit www.zurn.com

Z1960 8″ DIAMETER A.R.E. SANI-FLOR RECEPTOR WITH 6″ SUMP DEPTH

ENGINEERING SPECIFICATION

Zurn Z1960 Sani-Flor receptor features 8″ diameter x 6″ deep cast iron body and square hole, light-duty grate with white acid resisting porcelain enamel interior and top – complete with white ABS anti-splash interior bottom dome strainer.

NOTE

†Add 9/16″ to 8″ dimension when specifying ZN1960.

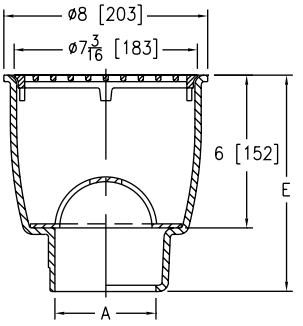

Dimensions in inches [mm]			Approximate Weight lb [kg]	Grate Open Area sq in [cm²]
A Pipe Size/ Outlet Type	E Body Height Dimensions			
	Z	ZN		
Inside Caulk (IC)				
3IC, 4IC	8-1/2 [216]	9 [229]	25 [11]	14 [6]
No-Hub (NH)				
2NH, 3NH, 4NH	8-1/2 [216]	9 [229]	25 [11]	14 [6]
Neo-Loc (NL)				
2NL, 3NL, 4NL	8 [203]	8-7/16 [214]	25 [11]	14 [6]

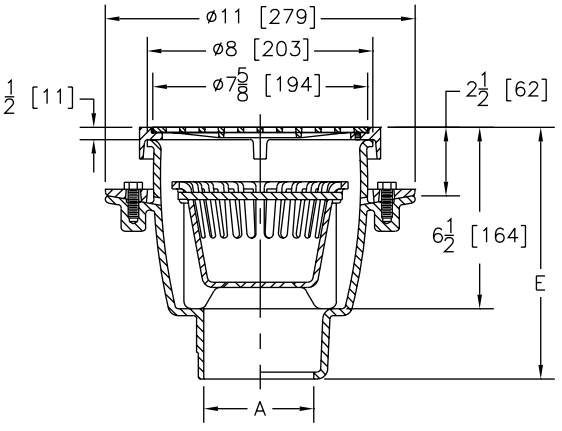

-T-KC-23 Options Shown

ZN1960-T-KC-23 Sani-Flor Receptor, 8-1/2″ square frame x 7-5/8″ round light-duty grate with 1/4″ openings (-T) x 6-1/2″ deep cast iron body with white acid resisting porcelain enamel interior and nickel bronze frame and grate with seepage flange with seepage holes and clamp collar (-KC) and aluminum bucket (-23).

PREFIXES	DESCRIPTION	A PIPE SIZE	Z (A.R.E.)	ZN (N.B.)
Z1960*	Cast Iron Body with White A.R.E. Interior and Top	2″, 3″, 4″	1,318.00	–
ZN1960†	Cast Iron Body with White A.R.E. Interior and Top, 8-1/2″ Round N.B. Frame, and Full Grate with 1/2″ Square Openings	2″, 3, 4″	–	1,769.00
OUTLETS (SPECIFY PIPE SIZE IN INCHES AND TYPE OF OUTLET)				
OUTLET TYPE		**PIPE SIZE/ OUTLET TYPE**		**ADD**
IC	Inside Caulk	3IC, 4IC	N/C	N/C
NH	No-Hub	2NH, 3NH, 4NH	N/C	N/C
NL	Neo-Loc	2NL, 3NL, 4NL	N/C	N/C
				ADD
SUFFIXES			**Z (A.R.E.)**	**ZN (N.B.)**
–K	Anchor Flange		286.00	286.00
–KC	Anchor Flange with Seepage Holes and Clamp Collar		472.00	472.00
–P	1/2″ Trap Primer Connection (See Z1023, NH Only)		194.00	194.00
–T	Square Frame and Round Grate with 1/4″ Square Openings (ZN only)		N/A	245.00
⏲ **–TC**	Neo-Loc Test Cap Gasket (2″, 3″, 4″ NL Bottom Outlet Only)		24.00	24.00
–2	1/2 Grate		N/C	N/C
–3	3/4 Grate		N/C	N/C
–4	Full Grate with Center Opening		178.00	178.00
–6	Grate with 6″ Dia. x 6″ High Funnel		488.00	626.00
–8	Grate with 8-7/8″ x 3-5/8″ x 3-3/4″ High Oval Funnel		531.00	876.00
–11	Vandal-Proof Secured Grate (ZN only)		N/A	79.00
–15	Solid Loose Set Cover		98.00	171.00
–23	Aluminum Bucket		228.00	228.00
–25	White A.R.C. Bucket		538.00	538.00
–31	Stainless Steel Mesh Liner for Bucket		472.00	472.00
–32	Aluminum Dome Strainer		N/C	N/C
–33	White A.R.C. Anti-Splash Bottom Dome Strainer		318.00	318.00
				DEDUCT
			Z (A.R.E.)	**ZN (N.B.)**
–LD	Less Bottom Dome Strainer		- 61.00	- 61.00
–1	Less Grate		- 194.00	- 211.00

BEST SELLERS	LIST PRICE
Z1960-2NH	1,318.00
Z1960-2NH-2	1,318.00
Z1960-3NH	1,318.00
Z1960-3NH-2	1,318.00
Z1960-3NH-2-32	1,318.00
Z1960-3NH-2-KC	1,790.00
ZN1960-3NH-2	1,769.00
Z1960-3NL-2	1,318.00
Z1960-3NL-23-TC	1,570.00
ZN1960-3NL-2-23-K	2,283.00
ZN1960-3NL-2-23-KC	2,469.00

For additional product information, please visit www.zurn.com

**Regularly furnished unless otherwise specified.*

Items designated as Best Sellers are most specified and are generally in stock for shipment.

⏲ *This symbol denotes a product that is engineered to reduce installation and rework time.*

Z1970 9″ DIAMETER SHALLOW A.R.C. SANI-FLOR RECEPTOR WITH 3″ SUMP DEPTH

ENGINEERING SPECIFICATION

Zurn Z1970 Sani-Flor receptor features 9″ diameter x 3″ deep cast iron body and round slotted, medium-duty grate with white acid resisting epoxy coated interior and top – complete with brass secondary strainer.

NOTE

†Add 11/16″ to 9″ dimension when specifying ZN1970.

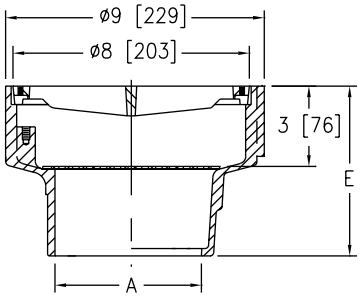

Dimensions in inches [mm]			Approximate Weight lb [kg]	Grate Open Area sq in [cm²]
A Pipe Size/ Outlet Type	E Body Height Dimensions			
	Z	ZN		
No-Hub (NH)				
2NH, 3NH, 4NH	5-3/4 [146]	6 [152]	14 [6]	18 [116]
Neo-Loc (NL)				
2NL, 3NL, 4NL	4-7/8 [124]	5-1/8 [130]	14 [6]	18 [116]

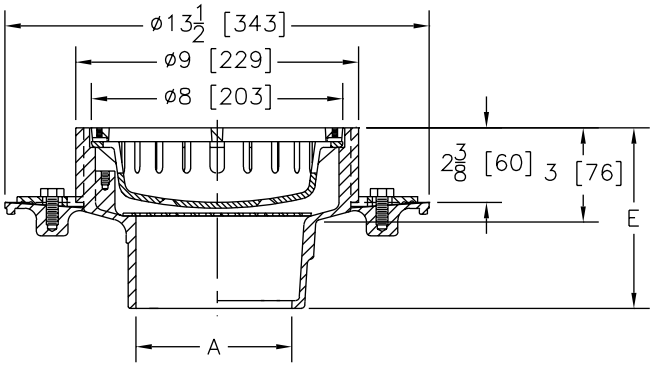

-KC-25 Options Shown

Z1970-KC-25 Sani-Flor Receptor, 9″ diameter x 2-3/8″ deep cast iron body and round slotted medium-duty grate with white acid resisting epoxy coated interior and top with seepage flange with seepage holes and clamp collar (-KC) and white A.R.C. bucket (-25).

PREFIXES	DESCRIPTION	A PIPE SIZE	Z (A.R.C.)	ZN (N.B.)
Z1970*	Cast Iron Body with White A.R.C. Interior and Top	2″, 3″, 4″	**1,273.00**	**–**
ZN1970†	Cast Iron Body with White A.R.C. Interior and Top, 9″ Round N.B. Frame, and Full Slotted Grate	2″, 3, 4″	**–**	**1,518.00**

OUTLETS (SPECIFY PIPE SIZE IN INCHES AND TYPE OF OUTLET)				
OUTLET	TYPE	PIPE SIZE/ OUTLET TYPE		ADD
NH	No-Hub	2NH, 3NH, 4NH	**N/C**	**N/C**
NL	Neo-Loc	2NL, 3NL, 4NL	**N/C**	**N/C**

SUFFIXES		ADD Z (A.R.C.)	ADD ZN (N.B.)
–K	Anchor Flange	**286.00**	**286.00**
–KC	Anchor Flange with Seepage Holes and Clamp Collar	**472.00**	**472.00**
–P	1/2″ Trap Primer Connection (See Z1023)	**194.00**	**194.00**
⏲ **–TC**	Neo-Loc Test Cap Gasket (2″, 3″, 4″ NL Bottom Outlet Only)	**24.00**	**24.00**
–2	1/2 Grate	**N/C**	**N/C**
–3	3/4 Grate	**N/C**	**N/C**
–4	Full Grate with Center Opening	**178.00**	**178.00**
–5	Grate with 4″ Dia. x 3-3/4″ High Funnel	**380.00**	**421.00**
–7	Grate with 6-3/4″ x 3″ x 1″ High Oval Funnel	**380.00**	**421.00**
–11	Vandal-Proof Secured Grate	**165.00**	**165.00**
–25	White A.R.C. Bucket	**228.00**	**228.00**
–31	Stainless Steel Mesh Liner for Bucket	**306.00**	**306.00**

BEST SELLER	LIST PRICE
Z1970-3NH-2	**1,273.00**

**Regularly furnished unless otherwise specified.*

Items designated as Best Sellers are most specified and are generally in stock for shipment.

⏲ *This symbol denotes a product that is engineered to reduce installation and rework time.*

For additional product information, please visit www.zurn.com

Z1982 12″ X 12″ STAINLESS STEEL SANI-FLOR CAN WASH DRAIN WITH 8″ SUMP DEPTH

ENGINEERING SPECIFICATION

Zurn Z1982 Sani-Flor can wash drain features 12″ x 12″ x 8″ deep fabricated stainless steel body, bottom outlet, anchor pan, medium-duty, loose set grate, and standing sediment bucket. Comes complete with chrome-plated bronze spray nozzle and water supply assembly.

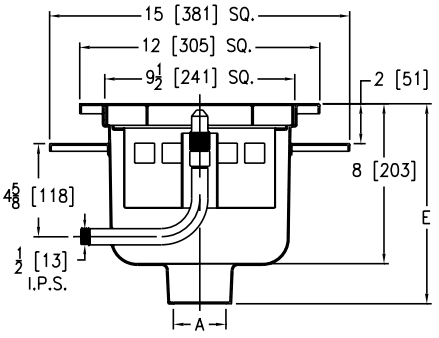

PREFIXES	DESCRIPTION	A PIPE SIZE	LIST PRICE
Z1982*	All Type 304 Stainless Steel	3″, 4″	4,244.00
OUTLETS (SPECIFY PIPE SIZE IN INCHES AND TYPE OF OUTLET)			
OUTLET	TYPE	PIPE SIZE/OUTLET TYPE	ADD
NH	No-Hub	3NH, 4NH	N/C
SUFFIXES			ADD
–C	Clamp Collar		185.00
–WB	Water Supply Control Box (See Z1464)		5,330.00
–11	Vandal-Proof Secured Grate		633.00
–31	Stainless Steel Mesh Liner for Bucket		472.00
BEST SELLERS			LIST PRICE
Z1982-3NH			4,244.00
Z1982-3NH-WB-31			10,046.00
Z1982-3NL-31			4,716.00

Dimensions in inches [mm]		Approximate Weight lb [kg]	Grate Open Area sq in [cm²]
A Pipe Size/ Outlet Type	E Body Height Dimensions		
No-Hub (NH)			
3NH, 4NH	10 [254]	45 [20]	20 [129]

Z1995 24″ X 16″ A.R.C. SANI-FLOR RECEPTOR WITH 17″ SUMP DEPTH

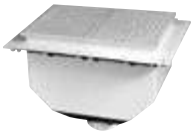

ENGINEERING SPECIFICATION

Zurn Z1995 Sani-Flor receptor features 24″ x 16″ x 17″ deep, white acid resisting epoxy coated interior, fabricated steel body, integral anchor flange, and rectangular square holed, heavy-duty grate – complete with stainless steel anti-splash interior bottom dome strainer.

NOTE

†Add 3/8″ to 15-3/4″ x 23-3/4″ and 3/16″ to 'E' dimensions when specifying ZN1995.

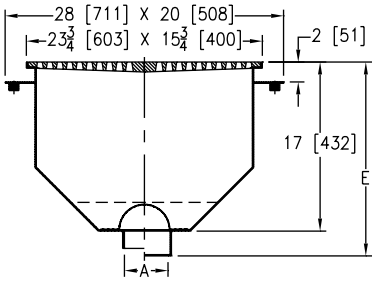

PREFIXES	DESCRIPTION	A PIPE SIZE	Z (A.R.C.)	ZN (N.B.)
Z1995*	Fabricated Steel Body with White A.R.C. Interior	3″, 4″, 6″	9,473.00	–
ZN1995†	Fabricated Steel Body with White A.R.C. Interior, 16-1/8″ x 24-1/8″ N.B. Frame and Full Grate with 1/4″ Square Openings	3″, 4″, 6″	–	12,122.00
OUTLETS (SPECIFY PIPE SIZE IN INCHES AND TYPE OF OUTLET)				
OUTLET	TYPE	PIPE SIZE/OUTLET TYPE		ADD
NH	No-Hub	3NH, 4NH, 6 NH	N/C	N/C
				ADD
SUFFIXES			Z (A.R.C.)	ZN (N.B.)
–KC	Anchor Flange with Seepage Holes and Clamp Collar		561.00	561.00
–P	1/2″ Trap Primer Connection (See Z1023)		380.00	380.00
–2	1/2 Grate		N/C	N/C
–3	3/4 Grate		N/C	N/C
–6	Grate with 6″ Dia. x 6″ High Funnel		488.00	626.00
–25	White A.R.C. Bucket		1,199.00	1,199.00
BEST SELLER				LIST PRICE
Z1995-4NH				9,473.00

Dimensions in inches [mm]			Approximate Weight lb [kg]	Grate Open Area sq in [cm²]
A Pipe Size/ Outlet Type	E Body Height Dimensions			
	Z	ZN		
No-Hub (NH)				
3NH, 4NH, 6NH	18-3/4 [476]	19 [483]	250 [113]	70 [452]

TECHNICAL INFORMATION

TECHNICAL INFO - ZURN OUTLET PIPE CONNECTIONS	**366**
TECHNICAL INFO - TOP LOADING CLASSIFICATION	**367**
TECHNICAL INFO - ZURN MATERIALS AND FINISHES	**368**
GENERAL TERMS AND CONDITIONS	**376**

TECHNICAL INFO - ZURN OUTLET PIPE CONNECTIONS

INSIDE CAULK (IC)

Often specified where drain body is positioned on pipe, bottom of outlet is sealed with oakum and connection is then completed according to local plumbing codes.

INSIDE GASKET (IG)

The IG connections utilize an inside caulk drain body and a Zurn "Sealtrol" gasket. This connection is only recommended for basement or ground floor applications.

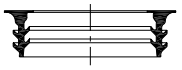

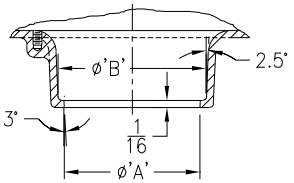

I.C. with Sealtrol Gasket (IG) Inside Caulk (IC)

OUTLETS	'A'	'B'	'C'
2. [51] I.C. Outlet	2-5/8 [67]	3-1/16 [78]	–
3. [76] I.C. Outlet	3-3/4 [95]	4-3/16 [106]	–
4. [102] I.C. Outlet	4-3/4 [121]	5-3/16 [132]	–
5. [127] I.C. Outlet	5-3/4 [146]	6-3/16 [157]	–
6. [152] I.C. Outlet	6-3/4 [172]	7-3/16 [183]	–
8. [203] I.C. Outlet	8-7/8 [226]	9-1/2 [241]	–

IRON PIPE (IP)

Zurn Iron Pipe Threaded connection is an old industry standard. The female (NPT) threaded outlet is often specified on industrial and institutional applications.

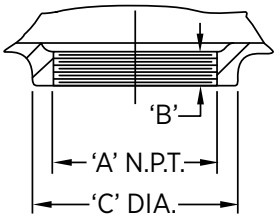

I.P. (Threaded/N.P.T.)

OUTLETS	'A'	'B'	'C'
2. [51] N.P.T. Outlet	2 [51]	9/16 [14]	3-1/4 [83]
3. [76] N.P.T. Outlet	3 [76]	3/4 [19]	4-1/2 [114]
4. [102] N.P.T. Outlet	4 [102]	15/16 [24]	5-5/8 [143]
5. [127] N.P.T. Outlet	5 [127]	15/16 [24]	6-11/16 [170]
6. [152] N.P.T. Outlet	6 [152]	1 [25]	7-3/4 [197]
8. [203] N.P.T. Outlet	8 [203]	1-1/8 [29]	9-3/8 [238]

NO-HUB (NH)

The most widely used connection. A No-Hub connection is achieved by butting No-Hub soil pipe or plastic pipe to the bottom of drain and securing it with a NH joint clamp. (Clamp furnished by others.)

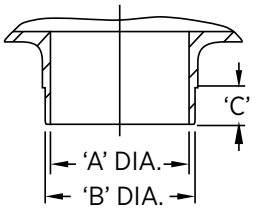

No-Hub (NH)

OUTLETS	'A'	'B'	'C'
2. [51] No-Hub Outlet	2 [51]	2-3/8 [60]	1-9/16 [40]
3. [76] No-Hub Outlet	3 [76]	3-3/8 [86]	1-9/16 [40]
4. [102] No-Hub Outlet	4 [102]	4-3/8 [111]	1-9/16 [40]
5. [127] No-Hub Outlet	4-15/16 [126]	5-5/16 [135]	2-1/16 [52]
6. [152] No-Hub Outlet	5-15/16 [151]	6-5/16 [160]	2-1/16 [52]
8. [203] No-Hub Outlet	8 [203]	8-3/8 [213]	2-1/16 [52]
10. [254] No-Hub Outlet	10 [254]	10-9/16 [268]	2-1/16 [52]
12. [305] No-Hub Outlet	12 [305]	12-9/16 [319]	2-1/16 [52]

NEO-LOC (NL)

Zurn Neo-Loc is a unique labor-saving compression gasketed connection designed to simply push on the stub end of the pipe. The Neo-Loc drain body and gasket can be utilized with plastic, steel, No-Hub and service weight soil pipe. A unique pipe stop cast in each Zurn Neo-Loc drain body ensures a proper fit.

Note: Not recommended for roof drain applications due to the watertight integrity of the Neo-Loc connection to the leader pipe being dependent upon adequate leader pipe support and accurate perpendicularity of leader pipe into Neo-Loc gasket.

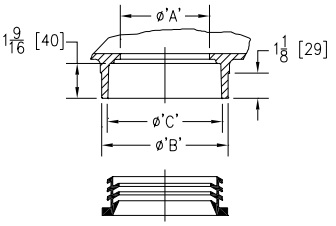

"Neo-Loc" (NL)

OUTLETS	'A'	'B'	'C'
2. [51] Neo-Loc Outlet	2 [51]	3-3/8 [86]	3 [76]
3. [76] Neo-Loc Outlet	3 [76]	4-3/8 [111]	4 [102]
4. [102] Neo-Loc Outlet	4 [102]	5-1/2 [140]	5-1/8 [130]
2. [51] NL w/-TC	2 [51]	3-3/8 [86]	3 [76]
3. [76] NL w/-TC	3 [76]	4-3/8 [111]	4 [102]
4. [102] NL w/-TC	4 [102]	5-1/2 [140]	5-1/8 [130]

Special Note: Zurn "Neo-Loc" and "Sealtrol" gaskets are designed for use exclusively with Zurn drainage products. They are not sold separately and all warranties either expressed or implied would be forfeited if used in other than a Zurn drainage product.

For additional product information, please visit www.zurn.com

TECHNICAL INFO - TOP LOADING CLASSIFICATION

Selection of a Zurn Floor Drain should be based on the load factor and the anticipated traffic. Many of Zurn's cast iron grates may be furnished in Duresist iron when increased working load requirements are necessary. Specify Duresist grate (-DG) when required or contact your Zurn representative when special applications are necessary.

Zurn drains are rated as follows: (Reference ASME Standard A112.6.3M)

6.1 – LOADING CLASSIFICATIONS

Grates and top rims shall be designed to meet the following loading classifications.

6.1.1 – LIGHT DUTY

All grates having safe live load (as calculated in para. 6.2.5) under 2000 lb. [900 kg].

6.1.2 – MEDIUM DUTY

All grates having safe live load (as calculated in para. 6.2.5) between 2000 lb. [900 kg] and 4999 lb. [2250 kg].

6.1.3 – HEAVY DUTY

All grates having safe live load (as calculated in para. 6.2.5) between 5000 lb. [2250 kg] and 7499 lb. [3375 kg].

6.1.4 – EXTRA HEAVY DUTY

All grates having safe live load (as calculated in para. 6.2.5) between 7500 lb. [3375 kg] and 10,000 lb. [4500 kg].

6.1.5 – SPECIAL DUTY

Grates having safe live load (as calculated in para. 6.2.5) over 10,000 lb. [4500 kg] shall be considered special and treated accordingly.

6.2 – TEST PROCEDURE FOR GRATE LOADING

Live Load – Requirements listed in 6.1 through 6.1.5 shall be determined as follows:

6.2.1 – LOAD CLASSIFICATIONS

Load classifications as stated in 6.1 shall be determined by laboratory tests.

6.2.2 – PLATEN SIZE

A 3.5 in. [89 mm] diameter platen shall be applied to the center of the grate specimen.

6.2.3 – LOADING

Loading shall be applied slowly so that point of failure can be observed.

6.2.4 – POINT OF FAILURE

(a) Brittle Materials (Cast Iron). The load (in pounds or kilograms) at which the first fracture on any part of the specimen appears.

(b) Ductile Material. The load which the permanent set (at the point of loading) is greater than 2% of the longest transverse dimension of the specimen.

6.2.5 – GRATE CLASSIFICATION

The maximum safe live load is computed by dividing the load at failure by two.

†Safe live load rating of grates is for general classification purposes only.
For the actual safe live load of any given grate, contact your Zurn representative.

Note: ZB and ZN 400 Series drain head assemblies are rated for light-duty applications only.

TECHNICAL INFO - ZURN MATERIALS AND FINISHES

ZURN CAST IRON

Conforms to ASTM Specification for Gray Iron Castings A48, Class 25. It is produced utilizing the latest equipment and newest developed foundry techniques. Zurn cast iron castings are characterized by a high degree of strength, corrosion-resistance, workmanship, and finish.

ZURN DURESIST

A ductile iron complying with ASTM Specification A536, Grade 60-45-10. Its physical properties make it ideal for grates and drain components that are subjected to severe and heavy duty service. Its chemical characteristics make possible a degree of corrosion-resistance far superior to that of cast iron. Zurn Duresist exhibits remarkable stress qualities, possessing a yield strength in the same range as that of cast carbon steel, while its ability to absorb the shock loading of traffic areas is unequalled, making its use ideal for all areas where extra heavy duty service is a requirement – whether indoors or outdoors – in chemical and metal processing plants or other industrial applications.

ZURN DURA-COAT

A specially formulated paint designed to resist cracking and chipping. Dura-Coat is a latex-based coating developed to be used with cast iron substrate. Dura-Coat is designed, per ASME standards, to protect the product "during normal handling and warehousing prior to installation".

ZURN GALVANIZED CAST IRON

A process of applying heavy zinc coating to a thoroughly cleaned iron casting. This coating contains 95% zinc. Zurn galvanizing can be supplied on all cast iron parts. It increases longevity and is recommended wherever the discoloration caused by oxidation of cast iron is objectionable. Galvanize should be used in industrial areas where corrosive atmosphere may be encountered.

CADMIUM PLATED CAST IRON

A process of applying a heavy cadmium coating to a thoroughly cleaned iron casting. This coating contains 95% cadmium in a cold applied process. Cadmium plating can be supplied on all cast iron parts. It increases longevity and is recommended wherever the discoloration caused by oxidation of cast iron is objectionable.

PROPERTIES OF BASIC DUCTILE VERSUS CAST IRON

METAL	CAST IRON	DUCTILE IRON
Specification	Class 25	60-45-10
Tensile Strength (PSI)	25/30,000	60/80,000
Yield Strength (PSI)	NIL	45/60,000
Elongation	NIL	10% to 25%
Modules of Elasticity	16 x 10	24 x 10

ZURN BRONZE

A semi-red brass conforming to ASTM Specification for Copper Alloy Sand Casting B584, Copper Alloy No. 844. The exposed surface is normally supplied possessing a satin sheen texture which allows it to blend unobtrusively with surrounding finishes. When the application requires, Zurn Bronze can be polished to a high gloss.

ZURN NICKEL BRONZE

A unique material that is ideally suited to traffic-bearing grates and strainers in finished floor areas. It affords the combined advantage of greater strength, better appearance, and longer service life at the same price as chrome plated brass. Superior ductility and shock resistance are the result of a copper nickel alloy (Copper Alloy 997) having a wearing surface similar in appearance to satin chrome plate; however, because it does not have a plated surface it cannot chip, peel, crack, or wear off. It is highly resistant to corrosion; however, the process of oxidation will naturally occur over time with most metals. Methods have been developed to prevent, preserve, and restore metals affected by oxidation.

CHROME PLATED BRONZE

Ideal for installation in walls, gutters, and other areas where a bright decorative finish is desired, and is not subject to the abrasive action of foot and other traffic. It is not recommended for installations where the abrasion will eventually wear through and cause peeling. It should always be specified for swimming pool fittings due to its high resistance to the halogens (chlorine, etc.), encountered in swimming pool sanitation.

ALUMINUM

Casting grade 319. This is an alloy containing both silicon and copper. It is a solid cast metal in a pleasing light gray color. The light weight, coupled with its exceptional strength and corrosion resistance, makes it ideal for drain components such as sediment buckets and strainers. When used with acid-resisting porcelain enamel coated drains, the possibility of chipping is minimized.

ZURN STAINLESS STEEL

Castings are normally produced in Type CF8 (304) which is an 18-8 Austenitic Stainless possessing excellent corrosion resistant qualities. For some applications where conditions demand, Type CF8M (316) stainless steel can be supplied. Items formed from stainless steel sheet and other stainless steel products are regularly furnished in Type 304 with 316 as an optional material.

A.R.C.

Acid Resisting Epoxy Coating is a baked-on powder coating, which produces a smooth, hard, high gloss finish. This epoxy based coating offers high impact resistance and excellent life expectancy in all drainage applications.

A.R.E.

Acid Resisting Porcelain Enamel is a substantially vitreous or glassy inorganic coating bonded to metal by fusion at a high temperature above 800°F. This coating offers excellent acid, abrasion, and wear resistance. The coating is extremely hard and is the ultimate for sanitation in drainage applications. Zurn A.R.E. coating conforms to the requirements of F.D.A. (Food and Drug Administration) Regulation 21-CFR5 117.1360.

For additional product information, please visit www.zurn.com

LEGACY CONFIGURATIONS ADDENDUM

SKU	LIST PRICE
ROOF DRAINS	
Z111-3IP	1,482.00
Z111-4IP-C-R	2,181.00
ZN160-6IP	8,000.00
ZRB160-4IP	6,652.00
Z166-4IC	1,877.00
ZB185-3IP	1,459.00
ZB185-4IP	1,459.00
ZRB185-3IP-45	1,242.00
ZRB185-3NH	1,242.00
ZRB185-4IP-45	1,242.00
Z195-4IC-CF	1,162.00
Z196-3IC	187.00
Z198-13HB	1,843.00
Z198-8HB	1,620.00
FLOOR DRAINS	
Z810 Nickel Grate (MTO)	713.00
ZN310-3NL	4,508.00
ZN310-4IP	4,644.00
ZN310-4NL	4,508.00
ZN319-4IP	28,826.00
ZN320-2IP	4,341.00
ZN320-3IC	4,205.00
ZN400-5D-USA	1,167.00
ZN400-7D-USA	2,073.00
ZN400-8D-USA	2,103.00
ZB400-8D-USA	1,916.00
ZN400-9J	1,493.00
ZN400-13J	2,142.00
ZN400-20J	7,004.00
ZB400-8J-USA	1,369.00
ZB400-17J	2,073.00
ZB400-5K-USA	2,788.00
ZN400-7O-USA	1,597.00
ZN400-2P	3,043.00
ZS400-5SZ	976.00
ZB400-6T-USA	1,493.00
ZN415-3NL-5D	1,500.00
ZN415-2NH-6SH	1,714.00
ZN415-3NH-6SH	1,714.00
ZN415-4NH-6SH	1,714.00
ZN415-4NL-6SH	1,714.00
ZB415-6IP-8SH	3,179.00
ZS415-3NH-SQ5-P	3,354.00
ZS415-6NH-SQ6	2,565.00
ZN453-2IP-5B	1,643.00
ZN453-3NH-5B	1,643.00
ZN453-4IP-5B	1,808.00
ZN453-4NH-6B	1,990.00
ZN453-4NH-6B-P	2,248.00
ZB453-3NH-5B	1,601.00
ZB453-4IP-5B	1,767.00
ZN455-3IP-6B	2,632.00
Z516-4NL	2,708.00
Z516-4NL-DG	3,605.00
Z517-4NL-Y	2,363.00
Z526-3IC	2,544.00
ZN529-6NH	4,209.00
Z556-3NL	711.00
Z556-4NL	711.00
Z560-3NL-Y	966.00
Z560-4NL	1,374.00
Z560-4NL-Y	1,541.00
ZB574-3IP	1,380.00
Z575-2NH	842.00
Z575-4NL	842.00

SKU	LIST PRICE
Z576-4NH	1,162.00
Z576-4NL	1,162.00
Z576-6IC	1,162.00
Z576-6IP	1,298.00
Z586-4NL	2,181.00
ZN609-3NH-Y	2,721.00
ZN609-4NH	2,482.00
Z730-4SP	3,570.00
Z730-4SP-V	4,812.00
TRAPS, PRIMERS, BACKWATER VALVES	
Z1012-3NH	2,340.00
Z1033-3X2	171.00
Z1034-3X2	143.00
Z1034-4X3	240.00
Z1042-6IPX6NH	1,233.00
CARRIERS	
EZCUTGUIDE	257.00
Z1236-F/K-12793	2,436.00
Z1236-F/K-12794	2,436.00
Z1253-79-F/K-12638	1,242.00
Z1253-F/K-2005	1,015.00
Z1253-F/TOTO-LT307.4	1,015.00
Z1258-F/AM-0194.019	1,024.00
Z1259-2-F/AM-124.024	573.00
Z1259-2-F/K-2032	573.00
Z1259-F/AM-0124.024	359.00
Z1259-F/AM-321.026	359.00
Z1259-F/AM-373.027	359.00
Z1259-F/K-1728	359.00
Z1259-F/K-2027	359.00
Z1259-F/K-2032	359.00
Z1282-HD4	3,214.00
HYDRANTS	
Brass Hinge Pin for Hydrant Boxes	26.00
Z1321-1X30	2,229.00
Z1321-1X4	1,769.00
Z1321-3/4X4-WC	1,493.00
Z1321-3/4X8	1,521.00
Z1321-3/4X14-WC	1,615.00
Z1321-3/4X18	1,769.00
Z1321-3/4X18-WC	1,769.00
Z1321-3/4X20	1,914.00
Z1321-3/4X24	1,914.00
Z1322-3/4X6	3,384.00
Z1365-1-1/2X4	17,669.00
Z1365-2X2	19,477.00
Z1365-2X3	19,971.00
Z1365-2X4-PB	21,029.00
Z1395-3/4X2	2,077.00
Z1395-3/4X5	2,349.00
Z1397XL-3/4x2	2,077.00
CLEANOUTS	
ZN1444-2	785.00
ZN1444-3	879.00
ZN1444-8	2,873.00
ZN1447-4	1,808.00
ZB1444-4	911.00
ZANB1457-3IP	1,098.00
ZANB1457-4IP	1,242.00
ZANB1457-5IP	1,622.00
ZANB1457-8IP	2,597.00
ZAB1457-4IP	1,098.00

SKU	LIST PRICE
ZAB1463-7	555.00
ZAB1469-5	168.00
ZAB1469-9	460.00
ZARB1470-2	97.00
ZARB1470-2.5	122.00
ZARB1470-3	168.00
ZARB1470-5	451.00
ZARB1470-6	605.00
ZARB1470-8	1,242.00
ZAB1472-4IP	1,008.00
ZS1475-7-1/4	592.00
STAINLESS STEEL DRAINS	
Z1761-3NH-PB	POA
FABRICATED STAINLESS STEEL DRAINS	
Z1840-6S-4NH	POA
SANI-FLOR RECEPTORS	
Z1930-2NH	2,811.00
Z1940-2NH	3,710.00
Z1940-3NH	3,710.00

NOTE: Items contained in the legacy configuration addendum are still available to support legacy specification but may be subject to longer lead-times. Call factory for availability or suggested substitution of a recommended best seller. Best Sellers are most specified and are generally in stock for shipment.

ALPHANUMERIC INDEX

A PERFECT FIT: Z1322XL-EZ AND Z1332XL-EZ ECOLOTROL™ WALL HYDRANTS 17
EZ HYDRANTS: Z1327-EZ, Z1350-EZ, Z1320XL-EZ 18
STABILIZER SOLUTIONS 9
THE RACE FOR TIME - Z1231-EZ 10
Z103 15" DIAMETER DEEP SUMP DUAL OUTLET ROOF DRAIN WITH LOW SILHOUETTE DOME 28
Z103-45 45º 15" DIAMETER DEEP SUMP DUAL OUTLET ROOF DRAIN WITH LOW SILHOUETTE DOME 29
Z130 14-9/32" DIAMETER SIPHONIC MAIN ROOF DRAIN 41
Z130 SIPHONIC ROOF DRAIN WITH DECK PLATE 13
Z131 14-9/32" DIAMETER SIPHONIC OVERFLOW ROOF DRAIN 41
Z163 15" DIAMETER COMBINATION MAIN ROOF AND OVERFLOW DRAIN WITH LOW SILHOUETTE DOMES AND DOUBLE TOP-SET® DECK PLATE 46
Z164 12" DIAMETER COMBINATION MAIN ROOF AND OVERFLOW DRAIN WITH LOW SILHOUETTE DOMES AND DOUBLE TOP-SET® DECK PLATE 47
Z165 8-3/8" DIAMETER COMBINATION MAIN ROOF AND OVERFLOW DRAIN WITH LOW SILHOUETTE DOMES AND DOUBLE TOP-SET® DECK PLATE 48
Z250H FOG-CEPTOR® INTERCEPTOR 7
Z400-18 LEVELING RING 79
Z400-SR FLOOR DRAIN STABILIZER RING 79
Z400 "TYPE BZ" ROUND LEVELING STRAINER WITH SQUARE OPENINGS 71
Z400 "TYPE SZ" SQUARE LEVELING STRAINER WITH SLOTTED OPENINGS 78
Z415B-DP BODY ASSEMBLY W/ "TYPE B" STRAINER AND DECK PLATE 85
Z415 BODY ASSEMBLY WITH "TYPE BZ" LEVELING STRAINER 90
Z415 BODY ASSEMBLY WITH "TYPE SZ" LEVELING STRAINER 106
Z415-BZ1 BODY ASSEMBLY W/ "TYPE B" STRAINER AND EZ1™ TECHNOLOGY 81
Z415-BZ1-DP BODY ASSEMBLY W/ "TYPE B" STRAINER, DECK PLATE AND EZ1™ TECHNOLOGY 83
Z415S-DP BODY ASSEMBLY W/ "TYPE S" STRAINER AND DECK PLATE 86
Z415-SZ1 BODY ASSEMBLY W/ "TYPE S" STRAINER AND EZ1™ TECHNOLOGY 82
Z415-SZ1-DP BODY ASSEMBLY W/ "TYPE S" STRAINER, DECK PLATE AND EZ1™ TECHNOLOGY 84
Z499B ROUND PROTECTIVE COVER FOR FLOOR DRAINS 80
Z499S SQUARE PROTECTIVE COVER FOR FLOOR DRAINS 80
Z1035 FLOOR DRAIN INSTALLATION STABILIZER 165
Z1035-Q STRUCTURAL DECK DRAIN STABILIZER 165
Z1036 FLOOR DRAIN INSTALLATION STABILIZER 166
Z1072 – ZSHIELD™ FLOOR DRAIN BARRIER TRAP SEAL 16
Z1201-H EZCARRY® ADJUSTABLE HORIZONTAL HIGH PERFORMANCE SIPHON JET – HUB AND SPIGOT SERIES 214
Z1201-N EZCARRY® ADJUSTABLE HORIZONTAL HIGH PERFORMANCE SIPHON JET – NO-HUB SERIES 212
Z1202-H EZCARRY® ADJUSTABLE VERTICAL HIGH PERFORMANCE SIPHON JET – HUB AND SPIGOT SERIES 226
Z1202-N EZCARRY® ADJUSTABLE VERTICAL HIGH PERFORMANCE SIPHON JET – NO-HUB SERIES 224
Z1222-CB CARRIER BANK 21
Z1231-EZ CONCEALED ARM SYSTEM – WALL LAVATORIES 257
Z1231-EZR CONCEALED ARM SYSTEM – FOR WALL LAVATORIES WITH ADJUSTABLE UPRIGHTS AND HEADER PLATES 258
Z1320XL-EZ ECOLOTROL CERAMIC DISC WALL HYDRANT – ENCASED, NON-FREEZE, ANTI-SIPHON, AUTOMATIC DRAINING 273
Z1322XL-EZ ECOLOTROL CERAMIC DISC WALL HYDRANT – EXPOSED, NON-FREEZE, ANTI-SIPHON, AUTOMATIC DRAINING 275
Z1327-EZ NARROW WALL HOT/COLD HYDRANT WITH MOUNTING BRACKETS – ENCASED, MODERATE CLIMATE 276
Z1332XL-EZ ECOLOTROL CERAMIC DISC WALL HYDRANT – ENCASED, ANTI-SIPHON, AUTOMATIC DRAINING, MODERATE CLIMATE 277
Z1350-EZ NARROW WALL HYDRANT WITH MOUNTING BRACKETS – ENCASED, MODERATE CLIMATE 279
Z1400B-DP BODY ASSEMBLY W/ "TYPE B" COVER AND DECK PLATE 293
Z1400-BZ1-DP BODY ASSEMBLY W/ "TYPE B" COVER, DECK PLATE AND EZ1™ TECHNOLOGY 291
Z1400-BZ1 FLOOR CLEANOUT WITH "TYPE B" COVER AND EZ1™ TECHNOLOGY 289
Z1400-BZ "LEVEL-TROL" ADJUSTABLE LEVELING FLOOR CLEANOUT 296
Z1400S-DP BODY ASSEMBLY W/ "TYPE S" COVER AND DECK PLATE 294
Z1400-SZ1 BODY ASSEMBLY W/ "TYPE S" COVER AND EZ1™ TECHNOLOGY 290
Z1400-SZ1-DP BODY ASSEMBLY W/ "TYPE S" COVER, DECK PLATE AND EZ1™ TECHNOLOGY 292
Z1400-SZ "LEVEL-TROL" SQUARE ADJUSTABLE LEVELING FLOOR CLEANOUT 297
Z1900-RL 12" X 12" X 6" REPLACEMENT FLOOR SINK LINER 350
Z1901-RL 12" X 12" X 8" REPLACEMENT FLOOR SINK LINER 352
Z1902-RL 12" X 12" X 10" REPLACEMENT FLOOR SINK LINER 354
Z1903 SANI-FLOR RECEPTOR INSTALLATION STABILIZER 354
Z1910-RL 8" X 8" X 6" REPLACEMENT FLOOR SINK LINER 356
ZE1201-H EZCARRY® ADJUSTABLE HORIZONTAL SIPHON JET WITH ELONGATED FITTING – HUB AND SPIGOT SERIES 220
ZE1201-N EZCARRY® ADJUSTABLE HORIZONTAL SIPHON JET WITH ELONGATED FITTING – NO-HUB SERIES 218
ZE1203-H ADJUSTABLE HORIZONTAL SIPHON JET WITH ELONGATED FITTING – HUB AND SPIGOT SERIES 238
ZE1203-N ADJUSTABLE HORIZONTAL SIPHON JET WITH ELONGATED FITTING – NO-HUB SERIES 236
ZF1201-N EZCARRY® HORIZONTAL SIPHON JET ONE-PIECE CARRIER – NO-HUB SERIES 222
ZF1202-N EZCARRY® VERTICAL SIPHON JET ONE-PIECE CARRIER – NO-HUB SERIES 230
ZN1201-N EZCARRY® ADJUSTABLE HORIZONTAL SIPHON JET – NO-HUB NARROW WALL SYSTEM (9-3/8" DEPTH FRONT TO BACK) 223
ZN1202-N EZCARRY® ADJUSTABLE VERTICAL SIPHON JET – NO-HUB NARROW WALL SYSTEM 231
ZURN TOP-SET® DECK PLATE 12
ABBREVIATIONS USED IN THIS CUSTOMER GUIDE 23
CARRIER – APPLICATION INDEX 208
CARRIER – HOW TO SPECIFY 208
CARRIER – PRODUCT COMPLIANCE 208
CARRIER – TECHNICAL DATA 208
CARRIER – TECHNICAL DATA 209
CAST IRON EZ1™ NOMENCLATURE DECODER 62
CLEANOUTS – APPLICATION INDEX 288
CUSTOMER GUIDE INSTRUCTIONS 22
FLOOR DRAINS - APPLICATION INDEX 61
FLOOR DRAINS - GENERAL INFORMATION 61
GENERAL TERMS AND CONDITIONS 376
GREASE INTERCEPTORS – OPERATION 173
GREASE INTERCEPTORS – PURPOSE 172
GREEN ROOFING DRAINAGE SOLUTIONS 15
HYDRANTS - APPLICATION INDEX 270
INTERCEPTORS – APPLICATION INDEX 172
INTERCEPTORS – GENERAL INFORMATION 172
OIL INTERCEPTORS – APPLICATION INDEX 194
OIL INTERCEPTORS – GENERAL PRODUCT INFORMATION 194
ROOF DRAIN - APPLICATION INDEX 26
ROOF DRAIN - GENERAL INFORMATION 26
ROOF DRAIN - PRODUCT COMPLIANCE 26
SANI-FLOR RECEPTORS – MATERIAL SELECTION 348
SANI-FLOR RECEPTORS – OPTIONS AND VARIATIONS 348
SOLIDS INTERCEPTORS – APPLICATION INDEX 186
SOLIDS INTERCEPTORS – GENERAL PRODUCT INFORMATION 186
SOLIDS INTERCEPTORS – SIZING 186
STAINLESS STEEL DRAINS – APPLICATION INDEX 314
STAINLESS STEEL DRAINS – BUTT-WELD ENGINEERING DATA 314
TECHNICAL INFO - TOP LOADING CLASSIFICATION 367

For additional product information, please visit www.zurn.com

ALPHANUMERIC INDEX

TECHNICAL INFO - ZURN MATERIALS AND FINISHES 368
TECHNICAL INFO - ZURN OUTLET PIPE CONNECTIONS 366
TRAPS, PRIMERS, AND BACKWATER VALVES – APPLICATION INDEX 156
TRAPS, PRIMERS, AND BACKWATER VALVES – OPTIONS AND VARIATIONS 156
TYPICAL PRODUCT PAGE NAVIGATION 22
VP-DRIVER VANDAL-PROOF DRIVER 154
Z100 15" DIAMETER MAIN ROOF DRAIN WITH LOW SILHOUETTE DOME 27
Z101 HIGH CAPACITY 20" DIAMETER MAIN ROOF DRAIN WITH LOW SILHOUETTE DOME 28
Z104 15" DIAMETER DEEP SUMP ROOF DRAIN WITH LOW SILHOUETTE DOME 30
Z105 CONTROL-FLO™ ROOF DRAIN WITH PARABOLIC WEIR 31
Z107 20" WIDE DECK FLANGE ROOF DRAIN 32
Z108 15" DIAMETER DECK RECEPTOR DRAIN 33
Z110 15" GREEN ROOF DRAIN WITH PERFORATED SCREEN ASSEMBLY, AND REMOVABLE COVER WITH LIFT HANDLE 34
Z110-AI GREEN ROOF DRAIN WITH PERFORATED SCREEN ASSEMBLY, REMOVABLE COVER WITH LIFT HANDLE, AND AUXILIARY INLET 35
Z111 12" DIAMETER FLAT DECK ROOF DRAIN FOR METAL DECKS 36
Z121 12" DIAMETER ROOF DRAIN LOW SILHOUETTE DOME 37
Z122 12" DIAMETER DECK RECEPTOR DRAIN 38
Z125 8-3/8" DIAMETER ROOF DRAIN LOW SILHOUETTE DOME 39
Z127 8-1/2" DIAMETER DECK RECEPTOR DRAIN 40
Z150 14" SQUARE TOP PROM-DECK DRAIN WITH HEEL-PROOF GRATE AND ROTATABLE FRAME 42
Z154 12" SQUARE TOP PROM-DECK DRAIN WITH HEEL-PROOF GRATE AND ROTATABLE FRAME 43
Z158 10" SQUARE TOP PROM-DECK DRAIN WITH HEEL-PROOF GRATE AND ROTATABLE FRAME 44
Z160 135° SCUPPER DRAIN 45
Z161 3" X 10" OBLIQUE SCUPPER DRAIN 45
Z180 4-1/2" DIAMETER CORNICE DRAIN WITH BOTTOM OUTLET 48
Z181 6" DIAMETER CORNICE DRAIN WITH BOTTOM OUTLET 49
Z182 4-1/2" DIAMETER CORNICE DRAIN WITH 90° OUTLET 49
Z185 6" DIAMETER CORNICE DRAIN WITH 90° OUTLET 50
Z187 6" X 7" OR 8" X 12" OBLIQUE SCUPPER DRAIN 50
Z189 5" X 6" X 11" SCUPPER DRAIN 51
Z190 VERTICAL EXPANSION JOINT 51
Z191 5" X 4" X 24" DOWNSPOUT BOOT 52
Z191-RD 4" X 18" DOWNSPOUT BOOT 52
Z192 4" X 3" DOWNSPOUT BOOT 53
Z193 VANDAL-PROOF HOODED VENT CAP 53
Z195 VENT STACK FLASHING SLEEVE 54
Z196 VENT STACK FLASHING SLEEVE 54
Z197 RISER SLEEVE 55
Z198 PARAPET SCUPPER SLEEVE 55
Z199-DC DOWNSPOUT COVER 57
Z199 DOWNSPOUT NOZZLE 56
Z250H FOG-CEPTOR® INTERCEPTOR 174
Z300 THOROFLUSH DRAIN 63
Z310 THOROFLUSH DRAIN 63
Z315 VANDAL-PROOF ACCESS DRAIN 64
Z319 THOROFLUSH DRAIN – LARGE CAPACITY 64
Z320 REFRIGERATOR DRAIN 65
Z325 INDIRECT WASTE FUNNEL WITH INTEGRAL BACKWATER VALVE 65
Z326 INDIRECT WASTE FUNNEL 66
Z328 FUNNEL CONVERTING ASSEMBLY 66
Z329 FUNNEL CONVERTING ASSEMBLY 67
Z349 TERRACE PLANTING AREA DRAIN 68
Z350 PLANTING AREA DRAIN 68
Z355 PRISON CELL FLOOR DRAIN 69
Z400 "TYPE BL" ROUND STRAINER WITH DEX-O-TEX FLANGE 70
Z400 "TYPE B" ROUND STRAINER WITH HEEL-PROOF SQUARE OPENINGS 69
Z400 "TYPE C" ROUND HINGED STRAINER 71
Z400 "TYPE D" ROUND STRAINER WITH SOLID HINGED COVER 72
Z400 "TYPE E" ROUND STRAINER WITH INTEGRAL FUNNEL 72
Z400 "TYPE G" ROUND STRAINER WITH DOME 72
Z400 "TYPE H" ROUND STRAINER WITH CLAMP DEVICE 73
Z400 "TYPE I" ROUND STRAINER WITH RAISED LIP 73
Z400 "TYPE J" RECTANGULAR STRAINER WITH HEEL-PROOF SLOTTED OPENINGS 74
Z400 "TYPE K" ANGULAR STRAINER 74
Z400 "TYPE M" ROUND STRAINER WITH SLOTTED OPENINGS AND SUR-SET BUCKET 75
Z400 "TYPE N" ROUND STRAINER WITH DEEP FLANGED GRATE 75
Z400 "TYPE SC" SQUARE STRAINER WITH SOLID HINGED COVER 77
Z400 "TYPE SH" SQUARE HINGED STRAINER 77
Z400 "TYPE SL" SQUARE STRAINER WITH DEX-O-TEX FLANGE 77
Z400 "TYPE S" SQUARE STRAINER 76
Z400-U ADJUSTABLE STRAINER EXTENSION 79
Z415 BODY ASSEMBLY WITH HEEL-PROOF "TYPE B" STRAINER 87
Z415 BODY ASSEMBLY WITH "TYPE BL" STRAINER 89
Z415 BODY ASSEMBLY WITH "TYPE C" STRAINER 91
Z415 BODY ASSEMBLY WITH "TYPE D" STRAINER 92
Z415 BODY ASSEMBLY WITH "TYPE E" STRAINER 93
Z415 BODY ASSEMBLY WITH "TYPE G" STRAINER 94
Z415 BODY ASSEMBLY WITH "TYPE H" STRAINER 95
Z415 BODY ASSEMBLY WITH "TYPE I" STRAINER 96
Z415 BODY ASSEMBLY WITH "TYPE J" HEEL-PROOF STRAINER 97
Z415 BODY ASSEMBLY WITH "TYPE K" STRAINER 98
Z415 BODY ASSEMBLY WITH "TYPE M" STRAINER AND SUR-SET BUCKET 99
Z415 BODY ASSEMBLY WITH "TYPE N" STRAINER 100
Z415 BODY ASSEMBLY WITH "TYPE SC" STRAINER 103
Z415 BODY ASSEMBLY WITH "TYPE SH" STRAINER 104
Z415 BODY ASSEMBLY WITH "TYPE SL" STRAINER 105
Z415 BODY ASSEMBLY WITH "TYPE S" STRAINER 101
Z420 DEEP SHANK FLOOR AND SHOWER DRAIN FOR MARBLE AND GRANITE APPLICATIONS 107
Z450 DRUM TRAP DRAIN WITH "TYPE B" STRAINER 108
Z451 SHALLOW TRAP DRAIN WITH "TYPE B" STRAINER 109
Z453 DEEP SEAL TRAP DRAIN WITH "TYPE B" STRAINER 110
Z455 TRAP DRAIN WITH FLOOR CLEANOUT WITH "TYPE B" STRAINER 111
Z456 DEEP SEAL TRAP DRAIN WITH FLOOR CLEANOUT AND CLAMP COLLAR WITH "TYPE B" STRAINER 112
Z460B SHALLOW BODY FLOOR DRAIN WITH SIDE OUTLET AND "TYPE B" STRAINER 113
Z461 6" SQUARE MODULAR NON-ADJUSTABLE FLOOR DRAIN WITH CLAMPING FRAME 114
Z503 15" HEAVY-DUTY AREA DRAIN 114
Z505 12" HEAVY-DUTY DRAIN 115
Z507 7" MEDIUM-DUTY DRAIN 116
Z508 9" EXTRA-HEAVY-DUTY DRAIN 117
Z509 12" HEAVY-DUTY DRAIN 118
Z511 9" HEAVY-DUTY DRAIN 119
Z512 12-1/4" HEAVY-DUTY DRAIN 120
Z513 9" SQUARE HINGED HEAVY-DUTY DRAIN 121
Z520 9" ADJUSTABLE HEAVY-DUTY DRAIN 122
Z521 12" DIAMETER ADJUSTABLE HEAVY-DUTY DRAIN 123
Z526 12" ADJUSTABLE HEAVY-DUTY DRAIN 124
Z530 9" MEDIUM-DUTY WIDE FLANGE DECK DRAIN 125
Z531 9" ADJUSTABLE FRAME WIDE FLANGE MEDIUM-DUTY DECK DRAIN 125
Z532 12-1/4" DIAMETER WIDE FLANGE HEAVY-DUTY FLOOR DRAIN 126
Z533 9" DIAMETER HEAVY-DUTY PARKING DECK DRAIN WITH SUPPORT FLANGE 126
Z534 12-1/4" DIAMETER HEAVY-DUTY PARKING DECK DRAIN WITH SUPPORT FLANGE 127
Z535 HEAVY-DUTY PARKING STRUCTURE DRAIN 127
Z536 15-3/8" DIAMETER HEAVY-DUTY PARKING DECK DRAIN WITH SUPPORT FLANGE 128
Z537 15-7/8" SQUARE TOP HEAVY-DUTY PARKING DECK DRAIN WITH SUPPORT FLANGE 129
Z539 12-1/4" HEAVY-DUTY DRAIN WITH DEEP SUMP 129
Z540 12-1/4" MEDIUM-DUTY DRAIN WITH SUR-SET BUCKET 130
Z541 12-1/4" DIAMETER HEAVY-DUTY DRAIN 131

For additional product information, please visit www.zurn.com

ALPHANUMERIC INDEX

Z545 16" DIAMETER HEAVY-DUTY DRAIN **132**
Z546 21-1/2" DIAMETER EXTRA HEAVY-DUTY DRAIN **133**
Z547 21" DIAMETER EXTRA HEAVY-DUTY HEEL-PROOF PARKING DECK DRAIN WITH SUPPORT FLANGE **133**
Z550 9" DIAMETER MEDIUM-DUTY DRAIN **134**
Z551 9" DIAMETER MEDIUM-DUTY DRAIN **135**
Z554 9" MEDIUM-DUTY DRAIN WITH SUR-SET BUCKET **136**
Z556 8" ADJUSTABLE HEAVY-DUTY DRAIN **136**
Z566 12" SQUARE OPEN TOP DRAIN **137**
Z575 6" X 12" MEDIUM-DUTY GUTTER DRAIN **137**
Z587 12-1/4" X 9-1/2" MEDIUM-DUTY DRAIN **138**
Z609 9" SQUARE HEAVY-DUTY DRAIN **138**
Z610 12-1/2" HEAVY-DUTY DRAIN **139**
Z611 9" MEDIUM-DUTY DRAIN **140**
Z624 ISOLATION DECK DRAIN **141**
Z625 ADJUSTABLE ISOLATION DECK DRAIN **141**
Z627 HEAVY-DUTY ADJUSTABLE ISOLATION DECK DRAIN **142**
Z629 VERTICAL WALL DRAIN WITH BACKWATER VALVE **143**
Z645 12-1/2" X 12-1/2" HEAVY-DUTY DRAIN **144**
Z662 16" HEAVY-DUTY DRAIN **145**
Z662-HF 16" HEAVY-DUTY DRAIN WITH HIGH FLOW DUCTILE IRON GRATE **146**
Z664 6" WIDE HEAVY-DUTY MODULAR TRENCH DRAIN **147**
Z665 12" WIDE HEAVY-DUTY MODULAR TRENCH DRAIN **148**
Z667 6" WIDE MEDIUM-DUTY MODULAR TRENCH DRAIN **149**
Z668 11-1/4" X 19-1/4" HEAVY-DUTY DRAIN **149**
Z673 29" X 30" EXTRA HEAVY-DUTY DRAIN **150**
Z675 13-1/2" EXTRA HEAVY-DUTY DRAIN **151**
Z676 13-1/2" EXTRA HEAVY-DUTY DRAIN **151**
Z730 9" TOP MEDIUM-DUTY DRAIN **152**
Z742 LIGHT-DUTY TRAP DRAIN **153**
Z761 12-1/2" X 12-1/2" HEAVY-DUTY DRAIN **154**
Z1000 DEEP SEAL TRAP **158**
Z1005 DEEP SEAL TRAP WITH ADJUSTABLE COVER **158**
Z1012 DEEP SEAL TRAP WITH FLOOR CLEANOUT **159**
Z1019 FUNNEL DRAIN WITH "P" TRAP **159**
Z1020XL ELECTRONIC TRAP PRIMER **160**
Z1021 WATER SAVER TRAP PRIMER WITH 1-1/2" COPPER SWEAT WALL CONNECTION **160**
Z1022-XL LEAD-FREE SANI-GARD AUTOMATIC TRAP PRIMER **161**
Z1023 TRAP PRIMER CONNECTION ADAPTER **161**
Z1024 FIXED AIR GAP **162**
Z1025 FIXED AIR GAP **162**
Z1030 HUB ADAPTER **163**
Z1032 INSIDE CAULK REDUCER **163**
Z1033 FEMALE PIPE THREAD REDUCER **164**
Z1034 FEMALE PIPE ECCENTRIC REDUCER **164**
Z1040 NO-HUB ADAPTER **166**
Z1042 ELBOW ADAPTER **167**
Z1072 ZSHIELD™ BARRIER TRAP SEAL DEVICE FOR FLOOR DRAINS **157**
Z1088 BACKWATER VALVE GATE TYPE **167**
Z1090 BACKWATER VALVE FLAPPER TYPE **168**
Z1091 BACKWATER VALVE FLAPPER TYPE **168**
Z1095 BACKWATER VALVE FLAPPER TYPE **169**
Z1099 BACKWATER VALVE BALL FLOAT TYPE **170**
Z1165 100 PPM GREASE INTERCEPTOR SYSTEM WITH SOLIDS INTERCEPTOR **175**
Z1170 GREASE INTERCEPTOR **176**
Z1170-UN GREASE INTERCEPTOR WITH USER NOTIFICATION SYSTEM **177**
Z1171 LOW PROFILE GREASE INTERCEPTOR **179**
Z1171-TD LOW PROFILE GREASE INTERCEPTOR WITH ACCUMULATING CONE AND FLOW CONTROL TEE **180**
Z1172 LARGE CAPACITY GREASE INTERCEPTOR **181**
Z1172-UN LARGE CAPACITY GREASE INTERCEPTOR WITH USER NOTIFICATION SYSTEM **182**
Z1173 EJECTO-MATIC GREASE INTERCEPTOR **183**
Z1173-TD EJECTO-MATIC GREASE INTERCEPTOR WITH GREASE ACCUMULATING CONE AND IN-LINE SHUTOFF VALVE **184**
Z1174 GREASE EATING BACTERIA DOSING UNIT AND SOLIDS INTERCEPTOR COMBINATION **185**
Z1175 HAIR INTERCEPTOR **187**
Z1176 HAIR INTERCEPTOR **187**
Z1180 SOLIDS INTERCEPTOR **188**
Z1181 SOLIDS INTERCEPTOR **188**
Z1182 SIDE ACCESS SOLIDS INTERCEPTOR **189**
Z1183-DF SOLIDS INTERCEPTOR WITH DISPOSABLE FILTER BAGS **190**
Z1183-FC SOLIDS INTERCEPTOR WITH FLUSH COVER **191**
Z1183 SOLIDS INTERCEPTOR **189**
Z1184 BOTTOM ACCESS SOLIDS INTERCEPTOR **192**
Z1185 LINT INTERCEPTOR **193**
Z1186 OIL INTERCEPTOR **195**
Z1186-ST OIL INTERCEPTOR WITH INTEGRAL STORAGE TANK **196**
Z1187 SAND AND SEDIMENT INTERCEPTOR **197**
Z1187-SI SAND INTERCEPTOR **198**
Z1188 LARGE CAPACITY OIL INTERCEPTOR **199**
Z1188-ST LARGE CAPACITY OIL INTERCEPTOR WITH INTEGRAL STORAGE TANK **200**
Z1189 OIL/SEDIMENT INTERCEPTOR WITH HEAVY-DUTY GRATE **201**
Z1194 OIL LEVEL SENSOR RETROFIT KIT **202**
Z1196 OIL INTERCEPTOR WITH OIL LEVEL SENSOR **203**
Z1198 LARGE CAPACITY OIL INTERCEPTOR WITH OIL LEVEL SENSOR **204**
Z1198-ST LARGE CAPACITY OIL INTERCEPTOR WITH INTEGRAL STORAGE TANK AND OIL LEVEL FLOAT SENSOR **205**
Z1200 CARRIER TOOLS AND ACCESSORIES **210**
Z1201-N-XB EZCARRY® BARIATRIC CARRIER – 1000 LB ADJUSTABLE HORIZONTAL SIPHON JET – NO-HUB SERIES **216**
Z1201-N-XH EZCARRY® EXTRA HEAVY-DUTY 750 LB ADJUSTABLE HORIZONTAL SIPHON JET – NO-HUB SERIES **217**
Z1202-N-XB EZCARRY® BARIATRIC CARRIER – 1000 LB ADJUSTABLE VERTICAL SIPHON JET – NO-HUB SERIES **228**
Z1202-N-XH EZCARRY® EXTRA HEAVY-DUTY 750 LB ADJUSTABLE VERTICAL SIPHON JET – NO-HUB SERIES **229**
Z1203-H ADJUSTABLE HORIZONTAL SIPHON JET – HUB AND SPIGOT SERIES **234**
Z1203-N ADJUSTABLE HORIZONTAL SIPHON JET – NO-HUB SERIES **232**
Z1204-H ADJUSTABLE VERTICAL SIPHON JET – HUB AND SPIGOT SERIES **240**
Z1204-N ADJUSTABLE VERTICAL SIPHON JET – NO-HUB SERIES **242**
Z1207-N ADJUSTABLE HORIZONTAL HIGH ROUGH-IN SIPHON JET – NO-HUB **244**
Z1208-H VERTICAL SIPHON JET WATER CLOSET SUPPORT SYSTEM – HUB AND SPIGOT **246**
Z1208-N VERTICAL SIPHON JET WATER CLOSET SUPPORT SYSTEM – NO-HUB **245**
Z1209-N VERTICAL OFFSET SIPHON JET WATER CLOSET SUPPORT SYSTEM – NO-HUB **247**
Z1212 WALL CLOSET SUPPORT SYSTEM **249**
Z1213-N 4" VERTICAL SIPHON JET WATER CLOSET SUPPORT SYSTEM – 2" OR 4" TOP VENT CLOSET FITTING ONLY (NO SUPPORT) **250**
Z1216 90° DOUBLE NO-HUB SYSTEM FOR FLOOR MOUNTED BACK OUTLET WATER CLOSETS **251**
Z1217 COUPLING TYPE SYSTEM – WALL URINAL/SERVICE SINK **252**
Z1218 COUPLING TYPE SYSTEM – WALL URINAL/SERVICE SINK **253**
Z1221 PLATE TYPE SYSTEM – WALL URINALS **254**
Z1222 PLATE TYPE SYSTEM – WITH BEARING PLATE **254**
Z1223 PLATE TYPE SYSTEM – TROUGH URINALS **255**
Z1224 PLATE TYPE SYSTEM – LAVATORY WITH BACK **255**
Z1225 PLATE TYPE SYSTEM – WATER COOLERS **256**
Z1229 PLATE AND EXPOSED ARM – HEAVY SINKS **256**
Z1231 CONCEALED ARM SYSTEM – WALL LAVATORIES **257**
Z1236 EXPOSED ARM SYSTEM – WALL LAVATORIES/SINKS **259**
Z1251 CONCEALED ARM SYSTEM – WALL SUPPORTED **260**
Z1253 ADJUSTABLE CONCEALED ARM SYSTEM – WALL SUPPORTED **260**
Z1255 EXPOSED ARM SYSTEM – WALL SUPPORTED **261**
Z1256 EXPOSED ARM SYSTEM – WALL SUPPORTED **262**
Z1257 EXPOSED ARM SYSTEM – WALL SUPPORTED **262**
Z1258 EXPOSED ARM SYSTEM – WALL SUPPORTED **263**
Z1259 PLATE SYSTEM – WALL SUPPORTED **264**

For additional product information, please visit www.zurn.com

ALPHANUMERIC INDEX

Z1280 WOOD STUD SUPPORTED WATER CLOSET CARRIER – NO-HUB 265
Z1282 WOOD STUD SUPPORTED WATER CLOSET CARRIER – HUB AND SPIGOT 265
Z1283 WOOD STUD SUPPORTED WATER CLOSET CARRIER – PLASTIC PIPE 266
Z1284 CONCRETE FLOOR SUPPORTED WATER CLOSET CARRIER 266
Z1285 WOOD STUD SUPPORTED WATER CLOSET CARRIER 267
Z1290 EASTERN STYLE WATER CLOSET 268
Z1300 ECOLOTROL WALL HYDRANT – ENCASED, NON-FREEZE, ANTI-SIPHON, AUTOMATIC DRAINING 271
Z1305 WALL HYDRANT – ENCASED, NON-FREEZE 271
Z1310 ECOLOTROL WALL HYDRANT – EXPOSED, NON-FREEZE, ANTI-SIPHON, AUTOMATIC DRAINING 272
Z1315 WALL HYDRANT – EXPOSED, NON-FREEZE 272
Z1320XL ECOLOTROL CERAMIC DISC WALL HYDRANT – ENCASED, NON-FREEZE, ANTI-SIPHON, AUTOMATIC DRAINING 273
Z1321XL ECOLOTROL CERAMIC DISC WALL HYDRANT – EXPOSED, NON-FREEZE, ANTI-SIPHON, AUTOMATIC DRAINING 274
Z1325 WALL HYDRANT – ENCASED, VARI-TEMP, NON-FREEZE 276
Z1330XL ECOLOTROL CERAMIC DISC WALL HYDRANT – ENCASED, ANTI-SIPHON, AUTOMATIC DRAINING, MODERATE CLIMATE 277
Z1333XL ECOLOTROL CERAMIC DISC WALL HYDRANT – EXPOSED, ANTI-SIPHON, AUTOMATIC DRAINING, MODERATE CLIMATE 278
Z1335 WALL HYDRANT – ENCASED, MODERATE CLIMATE 278
Z1350 NARROW WALL HYDRANT – ENCASED, MODERATE CLIMATE 279
Z1360XL GROUND HYDRANT – ENCASED, FLUSH TYPE, NON-FREEZE 280
Z1365 GROUND HYDRANT – ENCASED, FLUSH TYPE, NON-FREEZE 281
Z1370 GROUND HYDRANT – ENCASED, HOSE STORAGE, NON-FREEZE 282
Z1375 GROUND HYDRANT – ENCASED, MODERATE CLIMATE, INTERIOR USE 283
Z1385 POST HYDRANT – EXPOSED HEAD, NON-FREEZE 283
Z1388XL ROOF HYDRANT – EXPOSED HEAD, NON-FREEZE 284
Z1390 POST HYDRANT – EXPOSED HEAD, NON-FREEZE 284
Z1395XL YARD HYDRANT – EXPOSED HEAD, NON-FREEZE 285
Z1397XL FLO-TROL YARD HYDRANT – EXPOSED HEAD, NON-FREEZE 286
Z1400 EXTRA HEAVY-DUTY "LEVEL-TROL" ADJUSTABLE FLOOR CLEANOUT 295
Z1400-K HEAVY-DUTY "LEVEL-TROL" ADJUSTABLE FLOOR CLEANOUT WITH ANCHOR FLANGE 298
Z1402 HEAVY-DUTY NON-ADJUSTABLE FLOOR CLEANOUT 299
Z1404 HEAVY-DUTY FLOOR ACCESS HOUSING 300
Z1406 HEAVY-DUTY ADJUSTABLE SPIGOT CLEANOUT 300
Z1440 CLEANOUT FERRULE WITH PLUG 301
Z1445 CLEANOUT TEE 302
Z1446 CLEANOUT WITH ROUND WALL ACCESS COVER 302
Z1449 CLEANOUT FERRULE WITH PLUG 303
Z1454 ADJUSTABLE FLOOR CLEANOUT WITH FLASHING FLANGE 303
Z1456 DECK CLEANOUT 304
Z1457 FLOOR ACCESS COVER 304
Z1460 SQUARE WALL ACCESS PANEL 305
Z1461 SQUARE HINGED ACCESS PANEL 305
Z1462 SECURED WALL ACCESS PANEL 306
Z1463 ROUND SCORIATED ACCESS COVER 306
Z1464 WATER SUPPLY CONTROL BOX ASSEMBLY 307
Z1468 ACCESS COVER AND PLUG 307
Z1469 ROUND ACCESS COVER 308
Z1470 BRONZE CLEANOUT PLUG 308
Z1471 AIR INLET 309
Z1474 HEAVY-DUTY CLEANOUT HOUSING 309
Z1700 SHOKTROLS 312
Z1712 ACCUMUTROL 312
Z1715 15" DIAMETER ROOF DRAIN 315
Z1717 SCUPPER DRAIN 315
Z1720 4" X 8" OPEN SIGHT DRIP DRAIN 316
Z1721 6" X 12" OPEN SIGHT DRIP DRAIN 316
Z1724 ROUND FUNNEL 317
Z1725 OVAL FUNNEL 317
Z1726 ADJUSTABLE MEDIUM DUTY FLOOR DRAIN WITH ROUND TOP 318
Z1727 ADJUSTABLE MEDIUM DUTY FLOOR DRAIN WITH SQUARE TOP 319
Z1730 9" DIAMETER HEAVY-DUTY SHALLOW TYPE FLOOR DRAIN 320
Z1731 9" DIAMETER HEAVY-DUTY MEDIUM DEPTH FLOOR DRAIN 320
Z1732 9-5/8" DIAMETER HEAVY-DUTY ADJUSTABLE FLOOR DRAIN 321
Z1735 12" DIAMETER HEAVY-DUTY FLOOR DRAIN 321
Z1736 12" DIAMETER EXTRA HEAVY-DUTY FLOOR DRAIN 322
Z1737 15" DIAMETER EXTRA HEAVY-DUTY FLOOR DRAIN 322
Z1739 PIT DRAIN 323
Z1740 BACKWATER VALVE 323
Z1745 FLOOR CLEANOUT WITH O-RING SEAL PLUG 324
Z1749 12" X 12" SANI-FLOR RECEPTOR WITH 4" SUMP DEPTH 325
Z1750 12" X 12" SANI-FLOR RECEPTOR WITH 6" SUMP DEPTH 326
Z1751 12" X 12" SANI-FLOR RECEPTOR WITH 8" SUMP DEPTH 327
Z1752 12" X 12" SANI-FLOR RECEPTOR WITH 10" SUMP DEPTH 328
Z1755 13-3/8" SQUARE SANI-FLOR RECEPTOR 6" SUMP WITH ADJUSTABLE CLAMP FRAME 329
Z1761 24-5/16" SQUARE KETTLE DRAIN WITH 8" SUMP DEPTH 329
Z1762 25" X 15-1/2" KETTLE DRAIN 330
Z1763 37-9/16" X 22-7/8" KETTLE DRAIN 331
Z1800-6B 6" DIAMETER INDUSTRIAL FLOOR DRAIN 4-19/32" SUMP DEPTH 335
Z1800-8B 8" DIAMETER INDUSTRIAL FLOOR DRAIN 6" SUMP DEPTH 336
Z1800-8S 8" X 8" INDUSTRIAL FLOOR DRAIN 6" SUMP DEPTH 336
Z1800-12B 12" DIAMETER INDUSTRIAL FLOOR DRAIN 6" SUMP DEPTH 337
Z1800-12S 12" X 12" INDUSTRIAL FLOOR DRAIN 6" SUMP DEPTH 337
Z1810-6B 6" DIAMETER ADJUSTABLE INDUSTRIAL FLOOR DRAIN 338
Z1810-8B 8" DIAMETER ADJUSTABLE INDUSTRIAL FLOOR DRAIN 338
Z1810-8S 8" X 8" ADJUSTABLE INDUSTRIAL FLOOR DRAIN 339
Z1810-12B 12" DIAMETER ADJUSTABLE INDUSTRIAL FLOOR DRAIN 339
Z1810-12S 12" X 12" ADJUSTABLE INDUSTRIAL FLOOR DRAIN 340
Z1820-8B 8" DIAMETER INDUSTRIAL FLOOR DRAIN WITH SIDE OUTLET 340
Z1820-8S 8" X 8" INDUSTRIAL FLOOR DRAIN WITH SIDE OUTLET 341
Z1820-12B 12" DIAMETER INDUSTRIAL FLOOR DRAIN WITH SIDE OUTLET 341
Z1820-12S 12" X 12" INDUSTRIAL FLOOR DRAIN WITH SIDE OUTLET 342
Z1830-8B 8" DIAMETER INDUSTRIAL FLOOR DRAIN 8" SUMP DEPTH 342
Z1830-8S 8" X 8" DIAMETER INDUSTRIAL FLOOR DRAIN 8" SUMP DEPTH 343
Z1830-12B 12" DIAMETER INDUSTRIAL FLOOR DRAIN 8" SUMP DEPTH 343
Z1830-12S 12" X 12" INDUSTRIAL FLOOR DRAIN 8" SUMP DEPTH 344
Z1840-6B 6" DIAMETER INDUSTRIAL FLOOR CLEANOUT 344
Z1840-6S 6" X 6" INDUSTRIAL FLOOR CLEANOUT 345
Z1840-8B 8" DIAMETER INDUSTRIAL FLOOR CLEANOUT 345
Z1840-8S 8" X 8" INDUSTRIAL FLOOR CLEANOUT 346
Z1900 12" X 12" A.R.E. SANI-FLOR RECEPTOR WITH 6" SUMP DEPTH 349
Z1901 12" X 12" A.R.E. SANI-FLOR RECEPTOR WITH 8" SUMP DEPTH 351

ALPHANUMERIC INDEX

Z1902 12" X 12" A.R.E. SANI-FLOR RECEPTOR WITH 10" SUMP DEPTH **353**
Z1910 8" X 8" A.R.E. SANI-FLOR RECEPTOR WITH 6" SUMP DEPTH **355**
Z1920 16" X 16" A.R.C. SANI-FLOR RECEPTOR WITH 7" SUMP DEPTH **357**
Z1926 16" X 16" A.R.C. SANI-FLOR RECEPTOR WITH 12" SUMP DEPTH **358**
Z1930 8" X 4" A.R.C. SANI-FLOR RECEPTOR WITH 4" SUMP DEPTH **359**
Z1940 12" X 6" A.R.C. SANI-FLOR RECEPTOR WITH 8" SUMP DEPTH **360**
Z1950 12" DIAMETER A.R.E. SANI-FLOR RECEPTOR WITH 8" SUMP DEPTH **361**
Z1960 8" DIAMETER A.R.E. SANI-FLOR RECEPTOR WITH 6" SUMP DEPTH **362**
Z1970 9" DIAMETER SHALLOW A.R.C. SANI-FLOR RECEPTOR WITH 3" SUMP DEPTH **363**
Z1982 12" X 12" STAINLESS STEEL SANI-FLOR CAN WASH DRAIN WITH 8" SUMP DEPTH **364**
Z1995 24" X 16" A.R.C. SANI-FLOR RECEPTOR WITH 17" SUMP DEPTH **364**
ZN1209-N VERTICAL OFFSET SIPHON JET – NO-HUB NARROW WALL SYSTEM **248**
ZS400 "TYPE BS" ROUND STRAINER WITH SLOTTED OPENINGS **70**
ZS400 "TYPE SS" SQUARE STRAINER **76**
ZS415 BODY ASSEMBLY WITH "TYPE BS" STRAINER **88**
ZS415 BODY ASSEMBLY WITH "TYPE SS" STRAINER **102**
ZS880 STAINLESS STEEL LINEAR SHOWER DRAIN **11**
ZS880 STAINLESS STEEL LINEAR SHOWER DRAIN **334**
ZS1170 GREASE INTERCEPTOR STAINLESS STEEL **178**
ZURN BARIATRIC PROVIDES SUPERIOR PERFORMANCE **19**

NOTES

GENERAL TERMS AND CONDITIONS

PRICE AND TERMS OF PAYMENT

Terms are net, payable 30 days from date of invoice. All pricing in U.S. currency. The Buyer shall pay all sales, consumers, or other applicable taxes. A 1-1/2% monthly (18% annual) service charge will be added to the outstanding balance of all past due invoices.

Minimum invoice $250.00. Zurn Industries, LLC ("Zurn") reserves the right to apply a minimum order charge in order to meet the $250.00 minimum invoice requirement. All orders are subject to credit approval by the Zurn Credit Department prior to the acceptance of an order. Orders may be refused, delivery may be withheld, or shipment stopped in transit without any liability on Zurn's part at Zurn's sole discretion based upon Buyer's credit worthiness as determined by Zurn.

FREIGHT

All sales are F.O.B. seller's location. Zurn will allow full freight allowance when any of the following conditions are met: 1) Plumbing fixture only orders totaling $10,000 or more; 2) Zurn One System orders of $7,500 or more; 3) Any combination of Specification Drainage, Commercial Drainage, Finish Plumbing, Zurn Wilkins, Linear Drainage and Chemical Drainage orders of $5,000 or more; 4) Commercial Drainage only orders totaling $3,500 or more; or 5) PEX only orders totaling $3,000 or more. This full freight allowance applies when the shipment is within the continental United States and has a single destination of a Buyer's standard address or job location. Routing of shipment shall be determined at the sole direction of Zurn. Shipping dates are estimates and time of delivery shall not be of the essence of this sale contract. Under no circumstances will the Seller have any responsibility on account of any delays in manufacture, transportation, or otherwise. Terms of Export Shipment on application.

NOTE: Shipments in excess of 90" long or 3,000 lbs may be subject to additional charges, and shall be defined as an oversized and/or overweight product and Zurn's standard FFA terms may not apply. Please contact our Customer Service Department for guidance on potential additional shipping charges. This new policy supersedes any existing agreements.

These charges and restrictions apply in addition to Zurn standard terms and conditions for sale unless otherwise agreed upon by the parties.

LIMITED WARRANTY

Zurn goods sold hereunder are warranted to be free from defects in material and factory workmanship for the period of time from the date of purchase: AquaVantage® Flush Valves, AquaFlush® Flush Valves, Commercial Fixtures, Faucets, Showers, and Tubular Brass: three years; Chemical Drainage, Linear Drainage, Commercial Drainage, Specification Drainage, Zurn Wilkins, and Flush Valve, Faucets, and Tubular Brass decorative finishes: one year; PHIX® Cartridge: ten years; FOG-ceptor®: thirty years. Where permitted by law, **THE IMPLIED WARRANTY OF MERCHANTABILITY IS LIMITED TO THE ABOVE IDENTIFIED PERIOD OF TIME AND SHALL BE LIMITED SOLELY TO THE REPLACEMENT OF THE DEFECTIVE GOODS.** A damaged/broken test cock or ball valve is not considered defective. Please contact Zurn Customer Care for assistance.

Zurn will replace goods at no cost that prove defective provided Zurn is notified in writing of such defect and the goods are returned prepaid at the specified Zurn location with evidence that they have been properly maintained and used in accordance with instructions. **ZURN SHALL NOT BE RESPONSIBLE FOR ANY LABOR CHARGES OR ANY LOSS, INJURY, OR DAMAGES WHATSOEVER, INCLUDING, BUT NOT LIMITED TO, INCIDENTAL OR CONSEQUENTIAL DAMAGES.** The sole and exclusive remedy shall be limited to the replacement of the defective goods. Before installation and use, the purchaser shall determine the suitability of the product for his intended use and the purchaser assumes all risk and liability whatever in the connection therewith. All weights stated in Zurn catalogs and lists are approximate and are not guaranteed.

RETURNED GOODS

Standard cataloged material may be returned only with written permission of Zurn. Returned goods are subject to a 25% restocking charge of total saleable material returned, plus cost of reconditioning, if necessary, to make material sellable. Transportation charges are the responsibility of the Buyer. Credit allowance will be in the form of merchandise credit only – not cash credit. The value of the return must total at least $100.00 to qualify for credit allowance. No credit will be allowed for parts unless originally ordered and invoiced as parts. No credit will be allowed for discontinued or made-to-order items. Items that have been specially made are not subject to return or cancellation except by special negotiation. Material must be returned within one year of invoice date for credit to be issued for Chemical Drainage, Linear Drainage, and Commercial Drainage. Material must be returned within two years of invoice date for credit to be issued for Commercial Fixtures, Flush Valve Products, Specification Drainage, Tubular Brass, and Zurn Wilkins. No credit is allowed for Linear Drainage products that have been cut and Specification Drainage product with auxiliary tappings. Flush Valve material over two years old will be subject to a 50% handling charge. Flush Valve material over five years old will not be accepted. Commercial Drainage and Specification Drainage galvanized material will be credited at value of Dura-Coated cast iron, and chrome plated at value of bronze. Zurn Wilkins damaged/broken test cocks or ball valves are not considered defective.

ILLUSTRATIONS OF TYPICAL INSTALLATIONS

The typical installations for various products found in each product section are intended to illustrate the products and potential options for the use of these products. Under no circumstances are they to be construed as recommended installation procedures. Consult local codes and project specifications for proper installation instructions.

SHORTAGE/DAMAGE CLAIMS

Notification of material shortages or incorrect filling of orders must be made to Zurn within 10 days of receipt. No claims over three months old will be honored. Buyer agrees to make all complaints for damage in transit or "short count" directly to the carrier; before the contents are unloaded have the carrier agent's acknowledgment of such damage noted on the bill of lading and to present to the carrier its agent's acknowledgment of such damaged material with formal claim covering said damage.

GENERAL

Zurn reserves the right to make changes in design or equipment of any item or product without incurring any obligation on previously sold items, and to discontinue items at any time, without notice. Possession of this Catalog or other sales literature is not to be construed as an offer to sell. All orders are subject to acceptance by Zurn. Catalog printed in U.S.A.

Zurn flush valves are designed to comply with Army Corp of Engineers and Naval guide specifications, Military Specification MIL.V.29193 and Federal Specification WWP541.

Zurn flush valves comply with the following standards: ASME A112.18.1/CSA B125.1, A112.19.5, A112.19.2, A112.19.6, ASSE 1037 and 101 are listed by the following agencies: Canadian Standards, IAPMO/UPC/CUPC, and CSA 125.3. Zurn flush valves are manufactured from dezincification resistant alloys. For additional compliances, contact Zurn Industries, LLC, Finish Plumbing Operation, or 1-800-997-3876.

Zurn is not responsible for typographical errors. The contents of this guide are subject to revision without notice.

© 2018 Zurn Industries, LLC Items in this Guide are covered by Patents and Patents Pending. Registered Trademarks.

Zurn Industries, LLC Specification Drainage Operation
1801 Pittsburgh Avenue
Erie, PA 16502, 855.663.9876

In Canada
Zurn Industries Limited
7900 Goreway Drive, Unit 10
Brampton, ON L6T 5W6, 877.892.5216

ZURN.COM **US** 1.855.ONE.ZURN **CANADA** 1.877.892.5216

Form No. 210-041, 12/18